Reference Book

HUDSON Super Six



1916

MODEL

FIRST EDITION

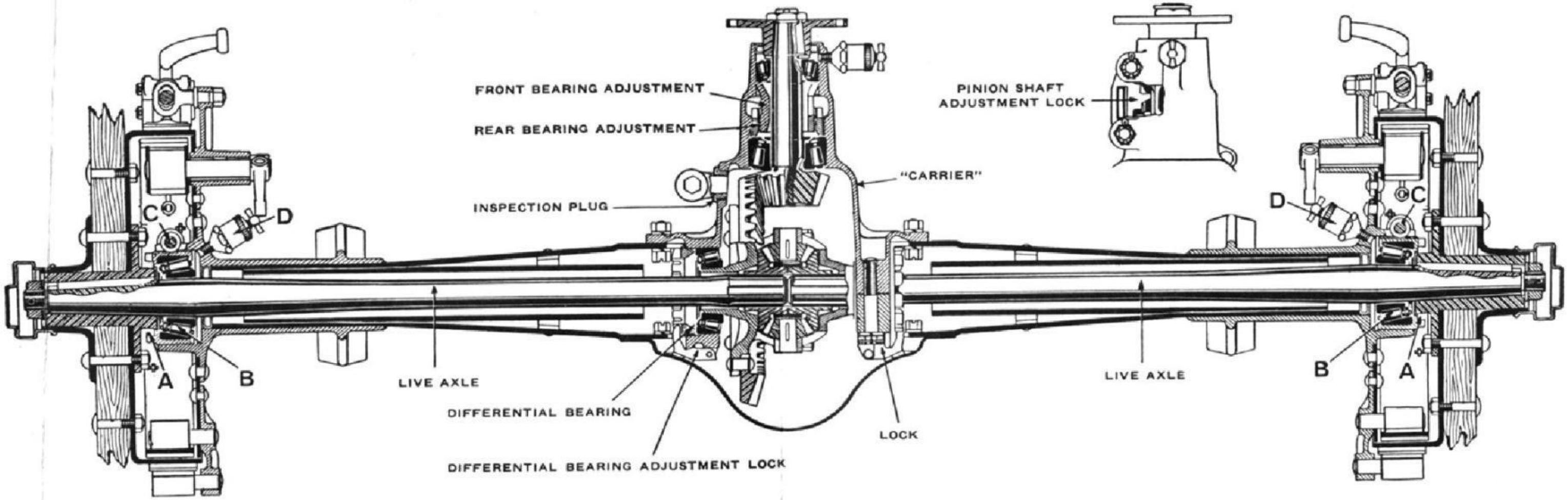

Rear Axle Diagram

INDEX

	Page
INTRODUCTION	5-3
How Power and Acceleration are Obtained	5
Carburetor	7
Oiling	7
General	8
Electrical Starting and Lighting Unit	9
Cooling System	10
Gasoline System -	10
Frame	10
Springs	11
Rear Axle	11
Brakes	11
Front Axle	12
Steering Gear	12
Clutch-	12
Transmission	12
Propeller Shaft Drive	12
Body and Trimming	12
Arrangement of Instruments on Dash	13
Speedometer	13
Windshield	13
Tire Carriers	13
Top and Curtains	13
HOW TO START THE MOTOR	15
USE GOOD MOTOR OIL	18
DIAGNOSIS OF COMMON TROUBLE	18-20
If Motor Stops	18
Reasons for Motor Missing	19
If Motor Lacks Power	19
Electric Cranking Fails	20
Failure of Motor to Start	20
If Motor Knocks	20
Reasons for Overheating	20
LEARN TO DRIVE YOUR HUDSON CAR PROPERLY	21
The Oiling System	22
The Care of the Clutch	26
Front Axle Adjustments	26
WHEEL	26
THE HUDSON REAR AXLE	28-32
Lubrication	28
Adjustment of Wheels	28
Adjustment of Gears	28
Adjustment of Brakes	29
THE GASOLINE SYSTEM	32
The Hudson Carburetor	33
Use Good Gasoline	38
THE SPRINGS	39
STORING THE CAR FOR THE WINTER	39
ACTION OF LUBRICANTS AT LOW TEMPERATURES	40
HOW TO CARE FOR YOUR AUTOMOBILE IN THE WINTER	41
Difficulty in Starting	41
Danger of Freezing Water Circulation	42

	Page
Brake Adjustment	29
The Gasoline System	31
The Vacuum Tank	32
The Hudson Carburetor	34
Carburetor Gasoline Level	35
Lubricating Chart	37
How to Turn Corners	45
Wiring Diagram	52
Side View of Generator	53
Motor Brushes	54
Generator Brushes	55
Spark Plug	56
Distributor	57
Automatic Advance Governor	58
The Dimmer	59
Wiring Diagram	60
Lamp Specifications	63
Meaning of Conventional Characters	64
Charging Circuit Diagram	67
Hydrometer Syringe	69
Storage Battery	70
Rear Axle	2

Introduction

The public measure automobiles by Style, Reliability and Performance.

The trend of fashion and the ability of a manufacturer to originate pleasing and useful designs influence the first of these items.

Reliability is brought about through.. excellence of workmanship, high-grade materials and an accessibility Which will tend to economical up-keep, simplicity being highly essential.

Performance, the actual ability of the car to do the work demanded by the driver is, at the present season, the one factor in the make-up of an automobile on which engineers are striving towards the highest ideals. Better roads call for more speed; and, by reason of our expecting to get from place to place more easily and quicker than before, heavy roads must be pulled through and steep hills overcome with proportionately less difficulty than heretofore. And with these added improvements we must have still more ease and comfort in riding and greater flexibility and smoothness in the power plant.

The Style of the Hudson car from the fashion standpoint does not interest us here; the purpose of this article being a technical description.

Reliability as to workmanship and materials is vouched for by the Hudson Motor Car Company.

Accessibility and simplicity of design can be comprehended at a glance.

It is in the power plant that wonderful improvements have made for exceptional performance. While these are not apparent to the eye, they may be immediately sensed by any driver who will spend a few moments at the wheel. After this experience, one is interested in learning something of the. construction which permits such constant pulling ability, coupled with smoothness and flexibility.

In judging the power of a motor, the important factor is the ability to steadily increase the speed of the motor up to about 2500 revolutions, which is practically the limit of useful road speed. In addition, the torque, or ability to pull a certain number of foot pounds, must be as great as possible, especially at low engine speeds, since it is impossible to drive a car fast on bad roads, or in extricating one's self from tight corners or congested traffic.

Another factor is the ability of a motor to develop maximum power in as short a time as possible. This is commonly called acceleration, or pickup.

How Power and Acceleration are Obtained

Perhaps the most commonly known limitation to great power at high speeds has been the internal friction of the motor. At one time, this was almost entirely attributed to the weight of the reciprocating parts, and as a result, smaller bore motors were offered because they permitted of high speeds. In experimenting with the four-cylinder motor on this basis, it was soon found that periodic vibrations manifested themselves at high speeds to such a degree as to absorb almost the entire power of the motor, leaving little to be used for the propulsion of the car.

This was caused by unbalanced forces. The introduction of the high speed, four-cylinder motor with the counterbalanced crank shaft, largely a European product intended for racing and extremely expensive to produce, was brought about through the realization of this defect.

American manufacturers having turned their attention to the solution of this problem by means of the six-cylinder motor, it was for a time believed that a solution had been found. However, it soon developed that motors which were more economical to build and maintain, and which delivered proportionately more power, could be obtained with six cylinders if the reciprocating parts were lightened and the speed increased. Vibration was still a limiting factor.

Some manufacturers now devoted their attention towards further lightening the reciprocating parts in an effort to reduce the -pressure for the working stroke for each individual cylinder. This had to be brought about through reduction in the bore and under such conditions, the power of the motor would materially decrease. Therefore, more cylinders were added and the V-type eight and twelve cylinder motor was developed.

For some time, the Hudson engineers had been viewing the problem with the same knowledge as their associates who were favoring the smaller bore motor. But they set about eliminating the trouble by a revision of the crank shaft construction, rather than by using more cylinders in order to decrease the weight of the reciprocating parts. This latter method necessitated many complications which they considered contrary to good practice.

The result has been a crank shaft which, by means of a patented system of eliminating vibration, makes a motor low in absorbed horse power and proportionately high in transmitted horse power.

As an illustration, the average six-cylinder motor in use today, having a capacity of about 300 cubic inches, seldom develops more than 55 horse power at 2000 revolutions. It is not possible to run such a motor continuously at speeds of 2500 revolutions, as this is beyond the critical point at which the motor would tend to self-destruction very rapidly. Such motors while transmitting only approximately a maximum of 55 horse power, would be actually doing work to the extent of 80 horse power for they average approximately 25 horse power in internal friction at 2000 revolutions. The absorption of power within the motor itself is the limiting factor in the life of that motor, in addition to limiting the power transmitted. By reducing the absorbed horse power, we obtain a proportional increase in the transmitted power, provided the design of other parts of the motor is nearly perfect.

This new design may well be called an invention because it enables us to get abnormal results from a motor of only six cylinders - 288 cubic inches.

In other details, the motor varies but little from general practice, except perhaps that it contains a greater number of refinements, is excellently proportioned as to bearings, valve adjustments, etc., and is extremely simple and accessible.

In order to meet the increased motor speed made possible through the new type of motor, it has been necessary to increase the area of valve openings 20% and 13% on the inlet and exhaust respectively. The crank shaft main bearings-of which there are four-have been increased 51/0 in diameter and considerably more in area, the bearings being 2-9/16", 2-1/8", 2-1/8" and 3-3/8" front to rear. This as compared with the Six-40.

Carburetor

It was also necessary to develop a special type of carburetor which could be depended upon to accurately proportion the mixture of gasoline and air at all speeds so that there might be no "starving" at the higher speeds and no tendency to "load" or flood the intake pipe at low speeds.

The new Hudson carburetor is therefore of a different type, developed by Hudson engineers, especially for this new motor. It may be said to be "pneumatically controlled" since no action of the driver can possibly alter the proportioning of gasoline and air. The butterfly valve, commonly called the throttle, is nothing more than a cock, or faucet, for delivering a certain amount of the mixture to the cylinders. The proportion of mixture delivered controls the speed of the motor or the power delivered, and therefore, must be regulated by the driver.

The mixing chamber of the carburetor, wherein the gasoline and air are proportioned and vaporized, is of such design as to control itself by the amount of mixture passing through the throttle valve. In this way it will be seen that, upon opening the throttle suddenly at low motor speed, the requirements of the motor are comparatively small and the suction is comparatively weak. This suction controls the mixing of the gasoline and air pneumatically by lifting a piston-measuring device in the mixing chamber, thus allowing only the correct amount of mixture to pass through. The necessary velocity or vacuum at the mixing device is controlled by the piston and gives perfect vaporization without having to use an excess of gasoline to obtain that result.

To sum up, the driver may stamp on the accelerator pedal and open the throttle valve with impunity; but the mixing device takes care of itself, proportioning the gasoline and air to the requirements of the motor with a precision which only a pneumatically controlled device can attain.

This improvement, which may rightfully be regarded as an improvement in the motor itself, is largely responsible for the great torque or pulling ability of the motor at low speeds.

Oiling System

High speed and excessive power impose proportionately greater strains and stresses upon the moving parts of a motor; hence it has become necessary to develop an entirely new and improved oiling system. On the new Hudson motor, this is most suitably termed a circulating, constant level, splash system.

The oil pump is mounted at the front of the motor, well above the frame line and in a position where it may be instantly inspected, removed, or tested without recourse to special tools or other appliances. Furthermore, it is of such simple and sturdy construction as to be easily comprehended by the layman.

It takes its oil from the pressed steel reservoir, drawing all of it through a filter or metal screen of fine mesh. The oil is fed directly into the front compartment containing the timing gears and their bearings and flows from this into the first oil trough immediately under No. 1 cylinder. The large splasher on the end of the connecting rod practically empties this oil trough at every revolution, throwing the oil into suitable channels or gutters on the side of the reservoir and crank case. The upper gutters feed the

main bearings in a continuous stream. The lower gutter feeds the oil directly into No. 2 trough. The splash from No. 2 oil trough feeds No. 3, and so on until No. 6 oil trough is reached, at which time the oil flows back into the reservoir. The connecting rod dipper is sufficiently effective to permit a very high level being maintained, thus insuring lubrication on all grades without excessive oil consumption. The two center bearings are fed by two troughs each. The front bearing is fed from the timing gears and one trough, and the rear bearing is fed by two large troughs.

It is therefore immediately apparent that all oil which enters at the front end must CIRCULATE COMPLETELY through the various troughs and bearings of the motor before it can find an exit at the rear end of the trough, there to re-enter the reservoir.

The reservoir contains over three gallons of oil in the troughs and in the reservoir itself. On account of its being of such large capacity and of pressed steel, having such an exposed position under the motor affords excellent cooling facilities. The large quantity of oil insures a slow enough circulation to allow of the proper cooling before the oil is recalculated through the bearings and troughs.

As the connecting rod dippers would splash more oil at the high speeds than at low speeds, it was necessary to control the stroke of the pump so that the flow might be proportionately increased to cope with the more rapid circulation. To accomplish this the carburetor throttle has been connected with the oil pump in such a way as to regulate the stroke of the oil pump plunger. While this may sound complicated, it is nevertheless an extremely simple device, the action being obtained by means of an eccentric and a very large pump plunger. This eccentric holds the plunger away from the cam which actuates it at low speeds, but allows it to come closer to the cam as the motor speed is increased. The pump has a short stroke when the motor is idling at the curb or running lowly but the minute the throttle is opened wide, the pump plunger stroke is immediately increased in proportion Before the motor has had time to pick up speed, the pump is delivering the amount of oil necessary to lubricate all moving parts under increased pressure.

The reservoir is fitted with a float indicator which shows the level of the oil by means of a red button working in a glass tube. This is on the left-hand side of the motor.

General Accessibility

The arrangement of the carburetor, oil pump, distributor, water pump, and generator on the new motor has all been worked out with a view to affording still more accessibility than prevailed on our previous models. In this new design, the valve tappet compartment covers are easily removed and all tappet adjustments are immediately accessible. The cylinder head is free from obstructions and it is more simple to remove it to grind valves and clean carbon than would be possible with the closed head and port plug type. The carburetor is on that side of the motor which contains no other accessories than the oil indicator and is placed high to permit it being cleaned and adjusted with ease. The same applies to the steering gear and pump control mechanism.

The motor is designed with a removable head instead of the conventional port plugs, this being deemed advisable for two reasons. First, it facilitates casting the cylinder and cylinder head, thereby insuring evenly proportioned combustion chambers. This counteracts any tendency to carbonization in a very large degree. Another reason is that the larger valves, necessary on account of the high motor speed, call for better cooling. It would not be practicable to use port plugs of a conventional type without sacrificing

The springs are in a direct line with the side members and therefore taper towards the front. Both sides of the frame are supported in a straight line over the point of suspension at the axles and no amount of loading can tend to warp the side members out of line.

The side members are of unusually deep section and all cross members are efficiently braced at the point of junction with the side member. The cross member, which is immediately over the rear spring bracket is of a box section, affording absolute rigidity.

All spring brackets are flanged to the side of the channel in addition to being attached to the under section.

The body is not carried over the side member proper but is bolted to separate brackets which are riveted to the side member flush with the upper flange. This eliminates the necessity of drilling large body bolt holes in the side member.

Springs

Semi-elliptic springs are employed because they enable us to use a spring of greater length. This would be impracticable with the three-quarter, or scroll suspension on account of the excessive side sway permitted. It also enables us to use a practically flat suspension spring, thus affording maximum flexibility for the least weight.

All spring eyes are phosphor bronze bushed and all spring bolts are of exceptionally large diameter, and fitted with grease cups. Springs are assembled with graphite grease between the leaves to reduce the friction and improve the riding qualities.

All strain from the axle driving mechanism is taken through the suspension springs. This minimizes shocks and twisting strains which would otherwise be transmitted through the torque arm to the chassis, at the same time cushioning such strain by absorbing the shocks in the spring itself. This is known as the Hotchkiss type of drive and has been in use on our Light Six models for the past three seasons. It is gaining in popularity each year and at the present time would seem to be the ultimate type of drive.

Rear Axle

The rear axle is of semi-floating construction with pressed steel housing and spiral bevel gears. Except for modifications and improvements in the adjusting mechanism, it is identical with the axle used on previous models. A larger section drive shaft and better grade materials insure the higher factor of safety required to transmit the power of the new type motor.

Brakes

The brakes are of construction common to Hudson cars for the past two seasons and have called for practically no improvement. They are large in diameter and ample in braking area. Leverage has been worked out in a manner which insures the maximum amount of braking effect with the minimum effort on the part of the driver. All adjustments are simple and well exposed so as to render them accessible.

Front Axle

The front axle, while of the same conventional design, has been improved. The tie bar adjustment is of such construction that it cannot possibly loosen and disarrange the alignment of the front wheels. The tie bar bushings are of hardened steel and are fitted with grease cups.

The steering knuckles and arms have been strengthened to give added safety at a higher car speed than has been demanded heretofore.

Steering Gear

The steering gear is of the worm and sector type and is provided with an adjustment for every working part. The worm wheel may be set in three different positions, each affording a new working surface. The accessibility of these adjustments, as well as of openings for lubrication, insures the maximum amount of safety so essential in any steering device.

Clutch

The clutch is of multiple disc, cork insert type, such as has been used on Hudson cars for six seasons with practically no change in design. It is noiseless in action and engages so smoothly as to be entirely free from jerking. It is a considerable factor in minimizing the strains and stresses on the transmission and rear axle mechanism which result from a "fierce" clutch. Being self-contained in the housing of the fly wheel, the only attention necessary is caring for the lubrication. This is made easy by placing the drain plug in an accessible position. It can be reached from the inside of the hood in a few minutes.

The lubrication of the clutch throw out collar has been facilitated by providing a grease cup connection above the floor boards. This cup may be filled and screwed down without getting out of the driver's seat.

Transmission

Except for the use of higher grade materials and improved heat treatment, the transmission remains the same as in previous models. The roller bearings are extra large and provided with adjustments for end play. All bearings, including the thrust bearings, are provided with oil ducts to insure efficient lubrication.

The transmission has four speeds, three forward and one reverse. The gear ratios have been developed with a view to affording the maximum engine efficiency at those speeds which will be most used for climbing hills.

Propeller Shaft Drive

The propeller shaft, which transmits the power from the transmission to the rear axle is of the hollow, tubular type, and has enclosed dust tight joints at either end. The light weight of the tubular shaft minimizes the wear on the propeller shaft joints and axle housing by decreasing the strains resulting from centrifugal action. In this way, it differs from the solid type of shaft as there is no tendency to whip.

All dust covers are provided with adjustments and the joints are immediately accessible for lubrication purposes.

Body and Trimming

The Super-Six has new body lines. The radiator is higher, the body lower, and the passengers sit lower in the car. It is more roomy, the driver's compartment particularly affording more leg room

The body is built with the double cowl; that is, the tonneau seats, like the front seats, face a finished dash in place of the seat backs formerly constituting the division. The seat curves have been redesigned to afford added comfort. We have retained practically the same design in the disappearing auxiliary seats.

The upholstery is all of a fine grade of grained leather. No fabric or installation leather is anywhere employed.

This body is a fitting accompaniment of the Super-Six motor inasmuch as effort and expense have not been spared in its design and production.

Arrangement of Instruments on Dash

The instrument board is arranged to carry its accessories in the center where they may be adequately illuminated at night.

The dash illuminator has a metal shroud which may be removed for the purpose of inserting an inspection lamp. The shroud may be turned several degrees in either direction to change the direction of the light, should the driver wish to make such an adjustment.

The gasoline feed regulator and the air control are mounted on the left-hand side of the lamp so as to be within easy reach of the driver.

The oil indicator is of the conventional gauge form, showing from one to five degrees of pressure.

Speedometer

The speedometer is of the magnetic type with a 75-mile range. It is driven by gears and through a flexible shaft from the front of the propellor shaft. Its mechanism being immediately in the rear of the transmission and under the floor board, is very accessible for purposes of lubrication or adjustment. It is a positive type of drive and, unlike the front wheel drive, is not exposed to dust and dirt.

Windshield

The windshield has been inclined at an angle of about 30 deg. thus making for better appearance and reducing the length of the top. The driver's range of vision is increased, making it possible for him to read road signs and names of streets from a very close range without having to put his head outside the top.

The sloping glass cannot reflect the lights of a car coming from behind and for the same reason gives a much better vision ahead. It is far safer than the vertical type of windshield.

In addition to the saving of weight occasioned by shortening the top, and the improved vision, there is also a tendency to divert the wind current away from the driver. The inclined windshield may be considered an improvement from this standpoint alone.

Tire Carrier

Tires are carried on the side, being supported by the left-hand fender and a bracket on the side of the body. We contend this is the logical position to carry spare tires. They naturally keep clean; they are more accessible, and, more important still, the dead weight is carried in the center of the car and does not extend over the rear, thus making the car unstable at high speeds, Also, it leaves the rear free for a trunk rack if required.

Top and Curtains

The top is of an improved "One Man" type, employing only four bows and therefore insuring maximum lightness. It is extremely easy to handle and can be put up in a few minutes by a person of less than ordinary strength. All curtains are carried in envelopes on the rear bow and can be dropped in position and attached without descending from the car. The driver's curtains are accessible for adjustment without moving from the seat. This is a very unique and desirable feature.

The top is furnished with a dust cover and when folded down is held in place by an improved type of bow fastener. When up, it is clamped to the windshield by wing nuts, thus eliminating all straps or other appliances which might tend to rattle.

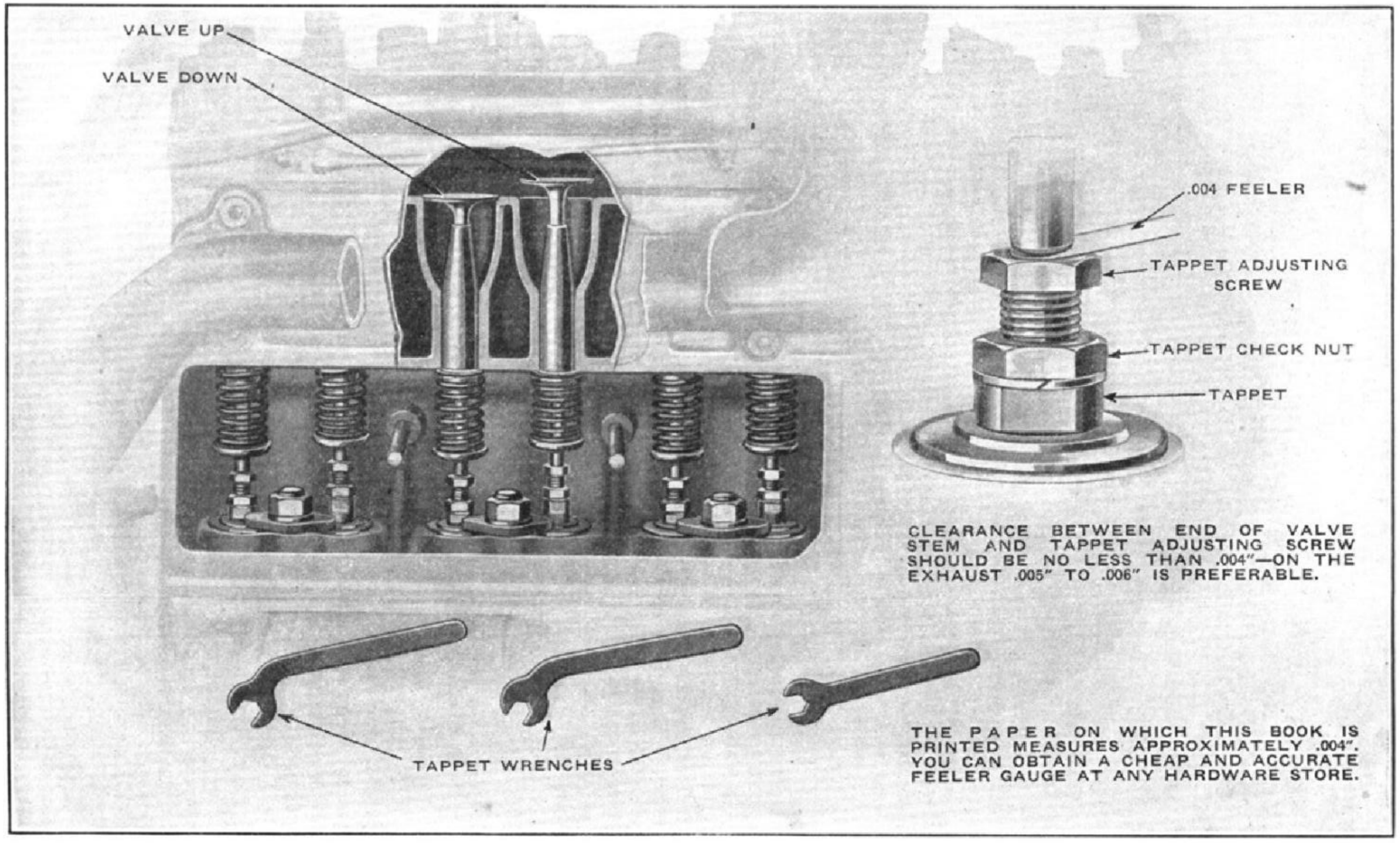

Valve Adjustment

Always be sure that the emergency brake is fully released before driving the car away. Leaving the brake on retards the acceleration of the car and tends to burn out the brakes.

DON'T RACE THE MOTOR NEEDLESSLY.

EVERY WEEK OR SO, THE CAR SHOULD BE LOOKED OVER THOROUGHLY AND OIL APPLIED THROUGH THE VARIOUS OIL HOLES PROVIDED FOR THAT PURPOSE; ALSO, SUCH MOVING PARTS AS ROD ENDS, PINS, CLEVISES, ETC., SHOULD BE WELL LUBRICATED.

See oiling chart, page 37.

Use Good Motor Oil

We cannot lay too much stress upon the importance of using a good quality of lubricating oil.

Whenever possible, buy your oil in cans. Do not accept bulk oil from a garage unless you are certain of its origin. Remember that motor oils are made from crude petroleum and the refineries are all operated by large corporations. These corporations sell to jobbers all over the country, who are free to sell it under any name they please They do not always buy from the same source, consequently, oil bearing (he same trade name may vary greatly in quality when purchased in different parts of the country.

IT IS NOT ECONOMICAL TO BUY CHEAP OIL. ALWAYS BUY THE BEST AND USE IT AS WE RECOMMEND.

We suggest you consult the nearest Hudson dealer and obtain his recommendations before purchasing oils offered you by local jobbers. If for any reason you are unable to obtain satisfactory advice locally, write the factory. We will give you the benefit of our experience.

Remember that in winter a thinner grade of oil must be used, owing to its tendency to congeal at low temperatures. In summer, a medium grade of oil must be used on account of the higher temperature at which the motor operates.

A tendency to overheat, indicated by rapid evaporation of water from the cooling system or laboring of the motor under heavy loads, may often be eliminated by using a different grade of oil or washing out the oil reservoir.

DIAGNOSIS OF COMMON TROUBLE

If Motor Stops

1. Out of gasoline. (Try pet cock on bottom of Vacuum tank.)
2. Vent may be clogged. (Vent is in rear tank cap.)
3. Disconnected spark. plug cables or other loose electrical connections.
4. Dirty contact points in the distributor or accumulation of oil or dirt on the underside of the distributor cover.
5. Out of motor oil, indicated usually by a knocking in the motor, followed by an abrupt stop. If this occurs, do not attempt to use either the electric starter or hand crank until the motor has been allowed to cool off. Kerosene should be applied to the pet cocks while the motor is still warm. This usually is a serious matter, and the motor should have the attention of a good mechanic before attempting to put the car into service again. 1
6. Cannot crank motor. Frozen water pump. Seized motor bearings, due to Lack of oil. Transmission gears engaged.

Reasons for Motor Missing

1. Short circuited spark plug. Points not adjusted .025" to .028".

2. Partially short circuited or broken secondary terminals.

3. Poor contact between the various ends and clips of wiring.

4. Loss of compression in one or more cylinders. Valves may be stuck. Valves may need regrinding or reseating. Valve springs may be weak or broken.

5. Water in gasoline, causing the motor to run spasmodically. (This is difficult to distinguish from other causes, and should be one of the last things looked for.)

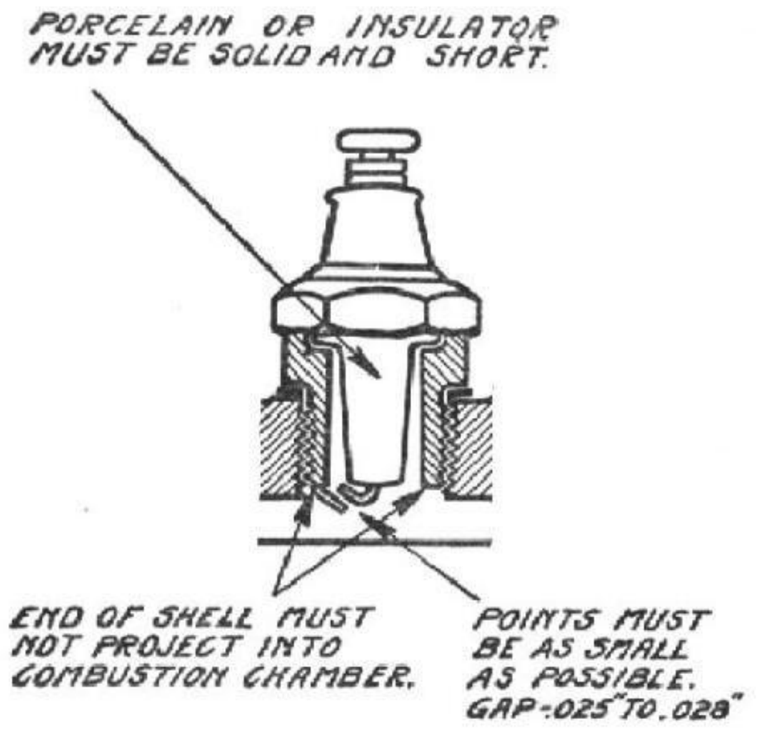

6. When the motor misses, you may locate the missing cylinder by opening the priming cock on top of the cylinders, one at a time. After replacing the spark plug in the missing cylinder with a new one, you will have to determine whether the missing is caused by defective plugs or wires leading to same. If the trouble is still continuing, turn over the motor slowly by hand in an endeavor to detect a defect in the compression in the different cylinders.

7. If missing is not due to any of these items, there may be an air leak between the carburetor and the intake manifold, or between the manifold and the cylinder bloc.

8. The check valve on top of the Vacuum tank which shuts off the suction from the intake pipe, may not be seating properly and gasoline is being drawn through into the intake. This will cause continual missing an cylinders No. 4, 5, and 6. For further details, see the instruction book on the Vacuum system or take the car to the nearest Stewart Service Station

9. If any wires in the entire electrical system have been tampered with at any time, refer to the wiring diagram on page 60.

If Motor Lacks Power

The motor will run, but will not pull on grades or under heavy loads.

1. Loss of compression due to leaky valves.

2. Too rich a mixture through some trouble in the carburetor, probably flooding due to grit under the float valve.

3. Late ignition. (See directions for timing the distributor, page 56 retarded spark.)

4. Lack of water in the radiator, or of oil in the motor, causing the motor to run hot.

5. Lack of gasoline. 11 this is due to stoppage of pipe, the motor will spit back through the carburetor when the throttle is opened.

6. Poor grade of gasoline in cold weather, causing too weak a mixture.

7. Dragging brakes. See that the car can be rolled by hand easily or that it will coast down hill when the clutch is released and does not slow down- Feel the brake drum with your hand to determine overheating.

8. Flat tires.
9, Improper adjustment of the gasoline regulator or dirt in the compartment immediately under the regulator.

Electric Cranking Fails

1. Loose battery connections.
2. Depleted battery.
3. Motor brush contact on commutator faulty.

Failure of Motor to Start

1. Switch not turned on.
2. Out of gasoline.
3. Poor grade of gasoline in cold weather, or water in the gasoline.
4. Weak ignition due to depleted storage battery.
5. If the motor turns over very slowly, your storage battery has become depleted, due to continuous cranking, prolonged burning of the lamps, with insufficient running of the motor or lack of care in filling with distilled water.
6. Contact points out of adjustment. See page 54.
7. Ignition "it shorted,
8. Water on coil or terminals.
9. Over-rich mixture caused by continued use of choke.

IF THERE IS GOOD CLEAN GASOLINE IN THE CARBURETOR, AND A GOOD SPARK AT THE PLUGS, YOUR MOTOR WILL START IF PROPERLY HANDLED.

If Motor Knocks

1. Spark advanced too far. (See directions for timing the distributor, page 56.)
2. Too rich a mixture. See that "choke" is open. If in "HOT" position, run carburetor on cold air instead of hot air.
3. Motor speed too slow in pulling on hills or through bad roads on direct drive. The remedy is to shift to a lower speed.
4. Loose connecting rod bearings. (Light knock at high speed.)
5. Crank shaft bearing loose. Heavy pounding at low motor speeds and under heavy loads.
6. Worn valve tappets. (Light tapping sound.)
7. Tappet noise due to improper adjustment. (See instructions for adjusting, page 17.)
8. Carbon in cylinders. Use a better grade of oil and wash out the reservoir more frequently.
9. Automatic governor does not return to retard position easily, Fill governor housing with grease.

Reasons for Overheating

1. Low supply of water.
2. Too rich a mixture of gasoline.
3. Carbonized cylinders,
4. Lack of motor oil.
5. Late ignition or retarded spark.
6. Broken or inoperative pump.
7. Radiator core stopped up with mud or other matter.
8. Loose or broken fan belt.
9. License tag obstructing front of the radiator.

DON'T POUR COLD WATER INTO A HEATED RADIATOR, IT MAY CRACK THE CYLINDERS.

DO NOT TRY TO CHANGE SPEEDS WITHOUT FIRST RELEASING THE CLUTCH.

Let in the clutch as gently as possible so as to minimize the strain on the motor in taking up the load. Letting the clutch in with a jerk causes excessive friction at the clutch discs and tends to burn them out. Besides this it exerts unnecessary strains on the driving mechanism.

Never slip the clutch in order to reduce the speed of the car or in an effort to make it climb a hill on high gear. The transmission is a device containing different gear ratios and for the sole purpose of minimizing the strains on the driving mechanism by means of an increased leverage which may be adjusted in proportion to the work done by the motor. Get into the habit of using your transmission gears at the right moment. Don't wait for the motor to knock and stall under excessive load before remembering to change speed.

Get into the habit of pushing the gear shift lever into the neutral position when you intend bringing the car to a stop. This permits you to apply the brakes gently and coast up to the curb with a smoothness of action that always wins applause. It also eliminates the possibility of your forgetting to set the lever into neutral position before switching off the engine. Do not leave the engine running at the curb unless it is for the express reason of warming it up preparatory to a trip. The electric cranking device is a gasoline saver if you use it properly.

Do not use the brakes and clutch pedal to control the car when the throttle will do it. By all means, get into the habit of using the foot accelerator, for this gives you a control of the car in just the same manner as the pedal controls the strength of tone in a piano.

Do not leave the car standing at the curb with the ignition switch on and the motor stopped. This wastes current and, if allowed to continue for any length of time, may result in burning up the ignition coil.

If you are in doubt as to your ability to operate the car along the lines we have laid out, seek the advice of our dealer rather than that of your friends who are driving other cars. Every Hudson dealer knows the best way to drive a Hudson car and we want you to learn to drive it that way.

The Oiling System

While the principle of the oiling system is explained in general way in the fore part of this book, it is advisable to become more intimate with it. This especially if you are obliged to maintain your own car or are in a locality where expert advice is not always obtainable.

On page 23 there is a diagram showing the manner in which the oil circulates through the various parts of the motor.

In this illustration it will be seen that the oil pump, while of the conventional type and operated by a plunger bearing on the eccentric, has a driving mechanism which is connected to the carburetor throttle, The purpose of this regulation is explained in our previous description of the oiling system. Its adjustment, however, should be understood by all.

The hand control eccentric, which keeps the plunger from operating on the cam, should be set so that the oil gauge registers I to 1½ degrees of pressure when the motor is running slowly. By this we mean at speeds from 10 to 20 miles an hour. As the throttle is opened, the eccentric is turned away from the plunger so as to allow it a greater amount of travel from the cam action. When the throttle is wide open, the eccentric should be in such a position as to permit a full travel of the pump plunger.

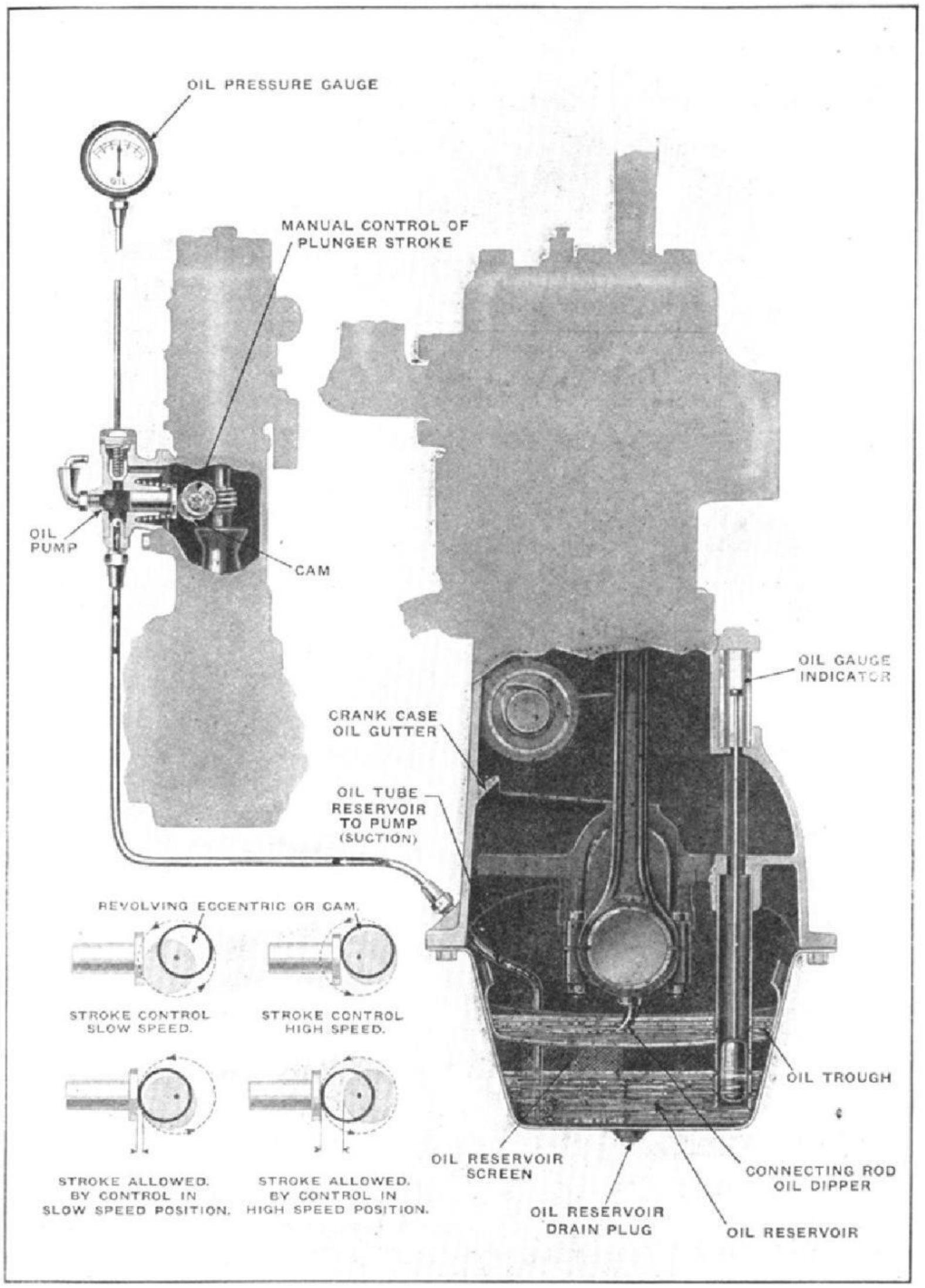

Details of Oiling System

By this adjustment, the oil pressure shown on the gauge will gradually increase as the car speed increases. It should register 3 to 4 at 30 miles, up to 50 miles an hour.

If, for any reason, the oil gauge does not act in this manner, the; pump control mechanism should be investigated to make sure that none of the levers have become disconnected or are slipping on the shafts.' Failure of the oil pump may cause serious trouble and result in burned' out bearings.

Upon the first indications of the oil pump being inoperative, make sure that there is plenty of oil in the reservoir and that the motor is getting sufficient lubrication by splash alone, irrespective of the pump. If you are any distance from the nearest Hudson dealer or a repair shop and have good reasons for deciding not to make any further investigation until such a place is reached, be sure that the oil reservoir contains an excess of oil and on no account drive the car at a speed of more than 25 miles an hour. It is very unlikely that you will ever experience, trouble of this nature, but we believe a warning is worth while.

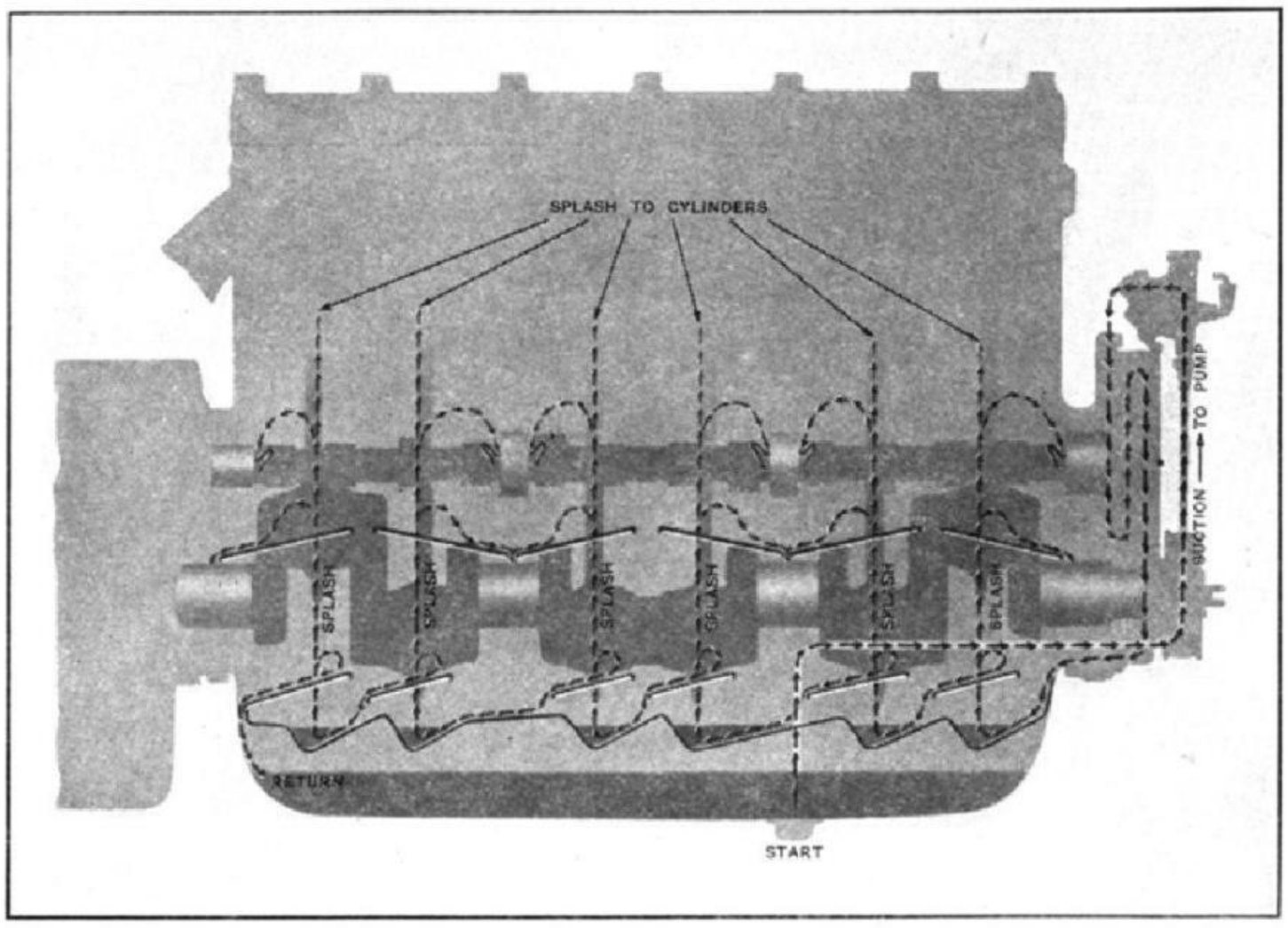

Oiling

System Diagram

FOR THE FIRST 1,000 MILES, NEVER DRIVE THE CAR AT A SPEED EXCEEDING 30 MILES AN HOUR. A NEW MOTOR REQUIRES MORE OIL THAN ONE THAT HAS BEEN IN SERVICE AS THERE ARE A GREAT MANY POCKETS AND PORES TO BE FILLED UP BEFORE A GOOD POLISH AND GLAZE IS GIVEN TO THE WORKING PARTS. THIS WEARING IN ASSURES SMOOTH AND PERFECT ACTION.

Racing a motor when it is new tends to cut and otherwise damage the bearings before they have had a chance to get run in. No matter how great the temptation to see how fast the car will go, wait until you have run at least 1,000 miles.

BE SURE TO FOLLOW OUR INSTRUCTIONS IN REGARD TO OILING.

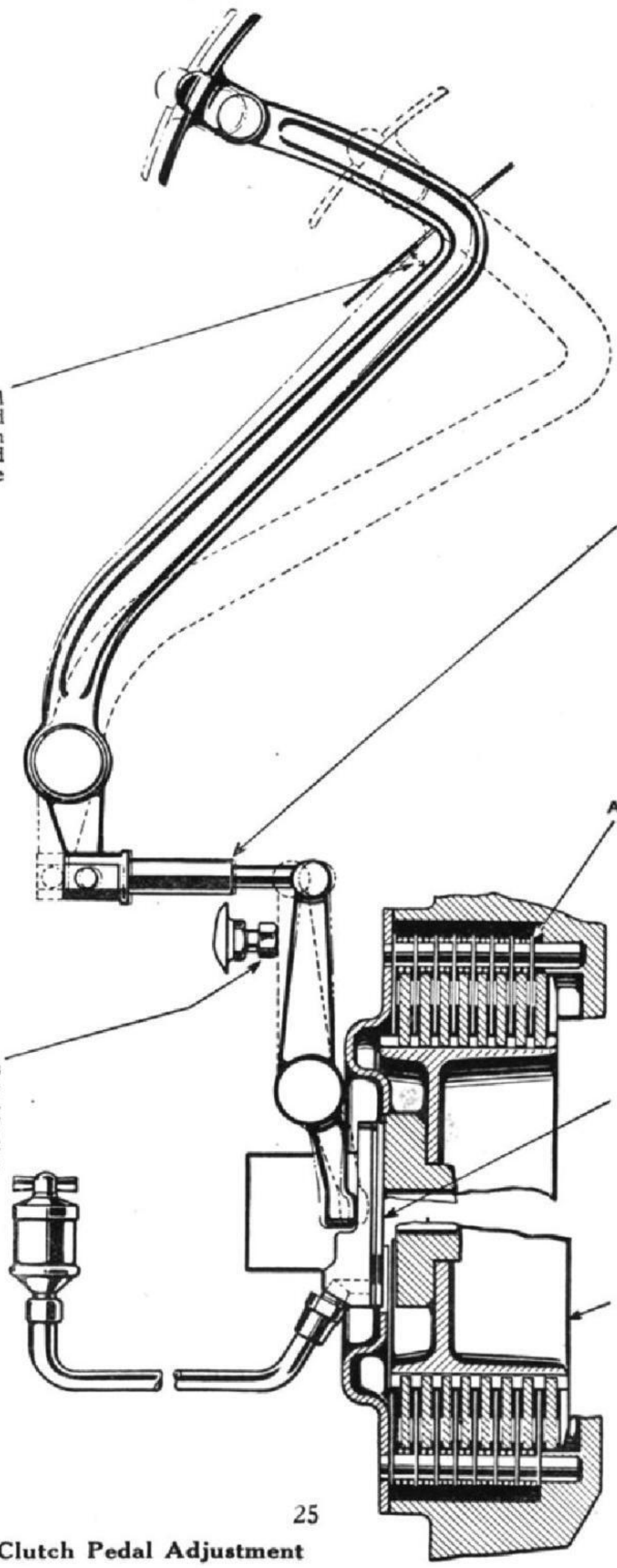

Clutch Pedal Adjustment

Next, measure with a tape or stick the distance between these lines at a point opposite the hub; turn the wheels half a revolution and measure again. The distance between the two results is the average, allowing for a slight wobble, and should be 5/16" to 3/8" less than the distance measured in the same way at the rear.

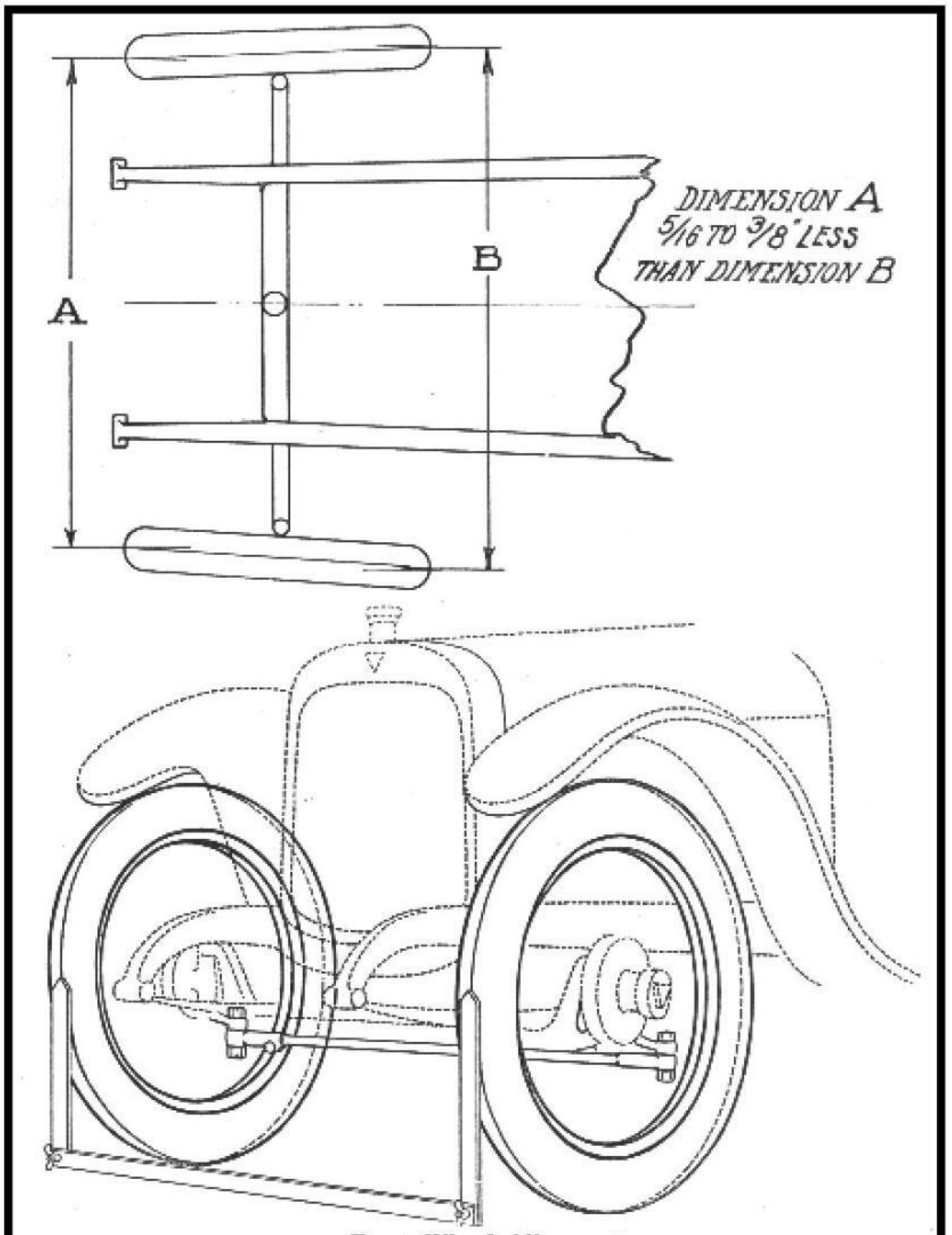

Front Wheel Alignment

The handiest way to check this alignment is with the distance stick shown in the illustration.

To adjust the distance rod, it is necessary to remove one of the bolts so that the clamp screw can be loosened and the clevis adjusted by turning on the threads of the distance rod. Any backlash in the axle knuckles and clevises should be taken up by straining the wheels outward in front before setting the distance by the rod.

The job should always be checked after the wheels have been let down on the ground with the weight of the car on them.

REAR AXLE
Lubrication

Whitmore Compound No. 45 is used to fill the rear axle housing, 5½ pounds being the quantity required. Filling the housing too full will cause the grease to work out at the rear wheels and front end of the pinion shaft. When this occurs, it will be necessary to lower the level, clean out the case, remove grease from shafts, and renew the felt washers located at the above mentioned places. Unless this is done, the grease will come out even though the level is lowered, due to capillary attraction.

The lubricant in the rear axle should be looked after every 2,000 miles. Clean out occasionally, and refill with the same oil after it has been strained, (if Whitmore Compound has been used) then add new oil if necessary to obtain the desired quantity.

Grease cups are provided (shown at "D" in rear axle illustration) just inside the brake supports. These lubricate the rear wheel bearings.

The grease cup on the pinion housing is intended to lubricate the pinion bearings.

These grease cups should be filled frequently with Whitmore Anti. Friction No. 5 Grease.

Adjustment of Wheels

Through usage, the wheel bearings or drive shaft bearings, shown at "B" in rear axle illustration, are subject to a certain amount of natural wear which in turn allows end play to develop in the drive shafts.

As the wheels are rigidly fastened to the drive shafts by being pulled up on a taper on the shafts, the bearing wear will cause side play in the wheels, which can be taken up in the following manner after the wheels have been removed. For this operation, we provide a special puller included in the tool kit.

"A" in rear axle illustration is the adjusting nut for the bearing "B," and "C" is the locking bolt for adjusting nut "A." After removing the locking bolt "C," tighten "A" by turning towards the right. A special wrench is furnished with the tool equipment for this purpose.

In making this adjustment, care should be taken not to take up all the play on one side. It should be equalized. The lining up of the brake drum and the axle housing on the opposite side to that on which the adjustment is being made, will indicate whether the wheel is out too far on that side.

Take up the adjusting nut so that the drive shafts show no end play but are perfectly free and the bearings do not bind.

Should it be impossible to lock the adjusting nuts "A" when the above results are obtained, back off rather than tighten so that the notches will line up in the adjusting nuts.

This adjustment does not affect the ring gear or drive gear in any way due to the fact that the drive shafts float through,

Adjustment of Gears

Before attempting to make any adjustments, remove the inspection plug at the left side of gear set and differential carrier. (See rear axle illustration.) See that the back face of the teeth on both pinion and ring gear are flush. The pinion adjustment can be reached by first removing the pinion adjustment lock held in place by two bolts on the top of the carrier, as shown in the small cut in rear axle illustration,

End play in the pinion shaft should be taken up by turning the front bearing adjustment toward the left (when looking at the axle from the front end.) This is the inner nut. The outer nut, which is for the rear bearing adjustment, should be held against movement during this

operation. Take up the play between the bearings until there is no end motion, but do not bind or cause the shaft to turn hard. Line up the slots in both adjusting nuts, then turn both toward the right to bring the pinion deeper into mesh with the ring gear, or toward the left to withdraw, The proper amount of back lash between the teeth of the ring gear and pinion is from 006" to .008".

The grease cup on the pinion housing is intended to lubricate the pinion bearings. This should be filled frequently with Whitmore Anti- Friction No. 5 grease. It should always be examined when a pinon adjustment is made and an additional quantity of grease added at the adjustment opening.

If the pinion is flush with the ring gear and there is too much lash or too little, the ring gear may be adjusted either in or out to remedy this condition.

The adjustments should be made as follows:

Remove the differential cover plate on the rear of the axle housing, Take off the differential bearing adjustment locks arid back off slightly the bolts holding the bearing caps in place, so that the adjusting nut can be turned easily. Only loosen a very little as the threads in these caps will become cross threaded if the bolts are backed out too much.

To move the gear toward the right, back off the right hand adjusting nut one or two notches at a time and take up on the left hand nut the same number of notches, or, if the gear needs to go to the left, reverse the action.

Take side play out of the bearings by these adjusting nuts,

When the proper results have been obtained, tighten the bearing caps and see that the bearing adjusting nut locks are put in place.

Adjustment of Brakes

The internal or emergency brakes are of the expanding type, the brake band bearing against the inside of the drum on the rear wheels.

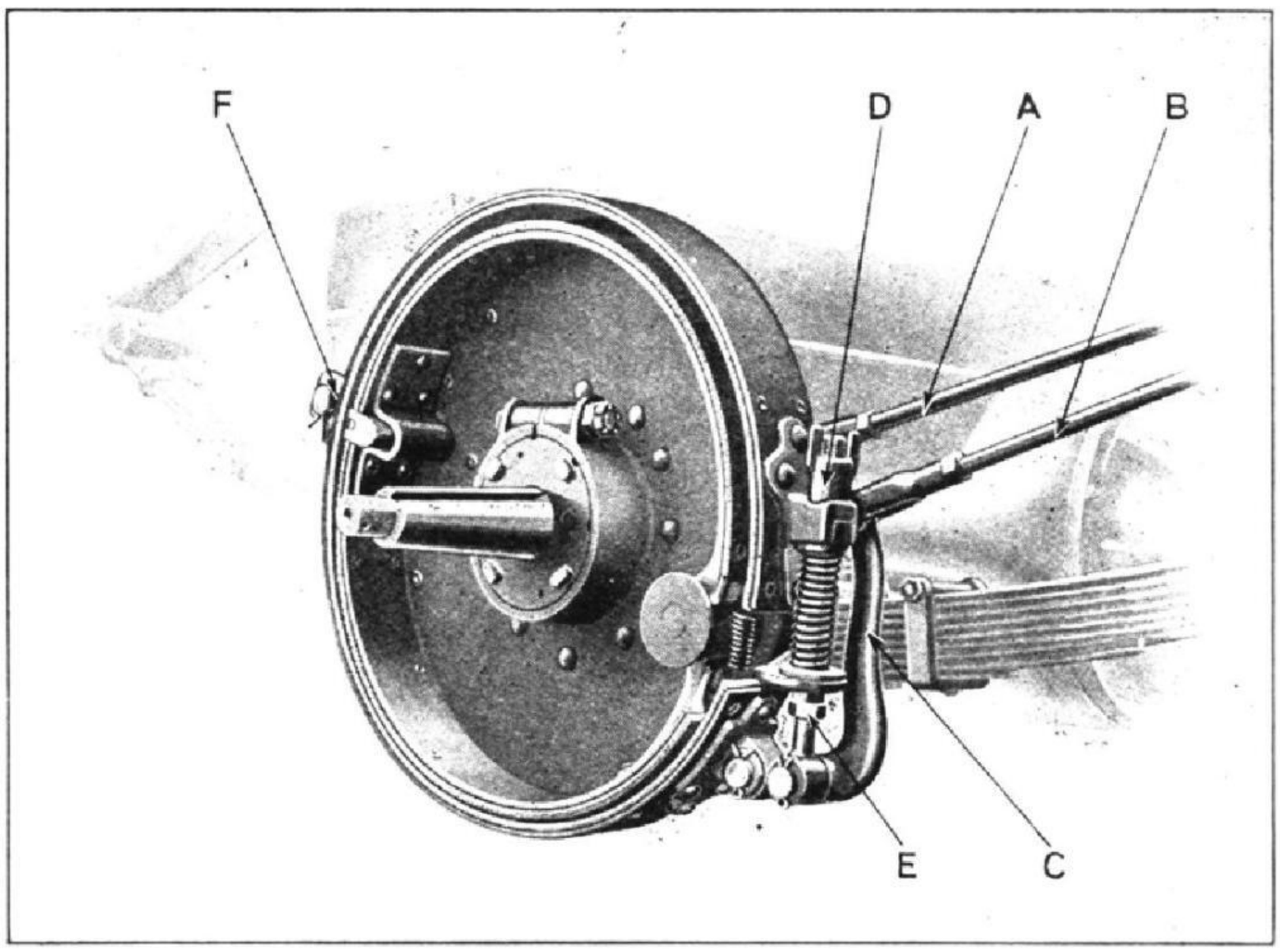

Brake Adjustment

These brakes are enclosed and it is therefore necessary to remove the wheel for any adjustment to the band itself.

For all ordinary purposes, the adjustment is made by shortening the rod "A" This brings the cam lever forward, thereby expanding the brakes. The wheels should spin freely without any signs of dragging. It is therefore essential that the rear of the car should be jacked up when making adjustments of the internal broke,

If the brake lining is worn out, proportionately mom movement of the cam will be required before the brake will grip. This will give less advantageous leverage and should only be resorted to in an emergency. Since the internal brakes must be relied upon to hold the car on any, grade and in any emergency, they must be relined as often as is necessary.

These brakes are not provided with equalizers in order to keep the leverage the same on both sides. Separate adjustments must be made for each brake and shortening of the rod "A" is the only correct method.

On no account attempt strain or change the leverage and rod length between the hand brake lever and the cross shaft which actuates the pull rods connected to the axle.

The external or foot brakes are of the contracting type and bear on the outer surface of the brake drums. On "Count of their receiving more wear and tear, they have been provided with more accessible adjusting mechanism.

Provided the brake lining is no, excessively worn, the method of procedure should always be as follows:

Remove the clevis pin which links the rod "B" to the lever "C." The lever "C' should then spring back and rest upon the bracket. Loosen the top adjusting nut "D" two turns. Now loosen the check nut at "E." This is the lower and smaller nut of the two.

By screwing up (turning from left to right in a clockwise direction) the adjusting nut, the lower portion of the brake band may be drawn closer to the brake drum, When this is drawn up so close that the thickness of a visiting card is all the clearance allowed between the brake lining and the drum the check nut "E" should be tightened so as to lock the adjustment of the lower half.

To adjust the top half, screw down on the nut "D" until it has the correct clearance.

Always set the lower half before adjusting the top half. Never attempt to adjust worn brakes without first disconnecting the clevis which connects the actuating rod to the brake lever.

If the brakes are very badly worn, the rear portion of the brake may stand farther away from the brake drum than the front portion. It will be necessary to bring this closer to the drum in order to make a good adjustment at the front end and this may be accomplished by removing the washer at "F" and inserting a shim or piece of metal of the necessary thickness between the stop pin and the brake band. This will shim the brake band closer to the center of the axle, thereby centralizing it and giving a greater range of adjustment at the front end.

On account of the wearing qualities of the lining with which these brakes are equipped, such adjustments should not be necessary more than once in a season unless the car is subjected to very heavy duty. In this event, it will be more satisfactory to reline the brakes than to attempt to simply adjust the worn brake lining.

If the brake squeaks, it is an indication that it is dirty and needs cleaning, or that it is out of adjustment. In the former case, dirt clogs ,the pores in the surface of the lining and glazes it over. Kerosene applied with a stiff brush will remove this dirt.

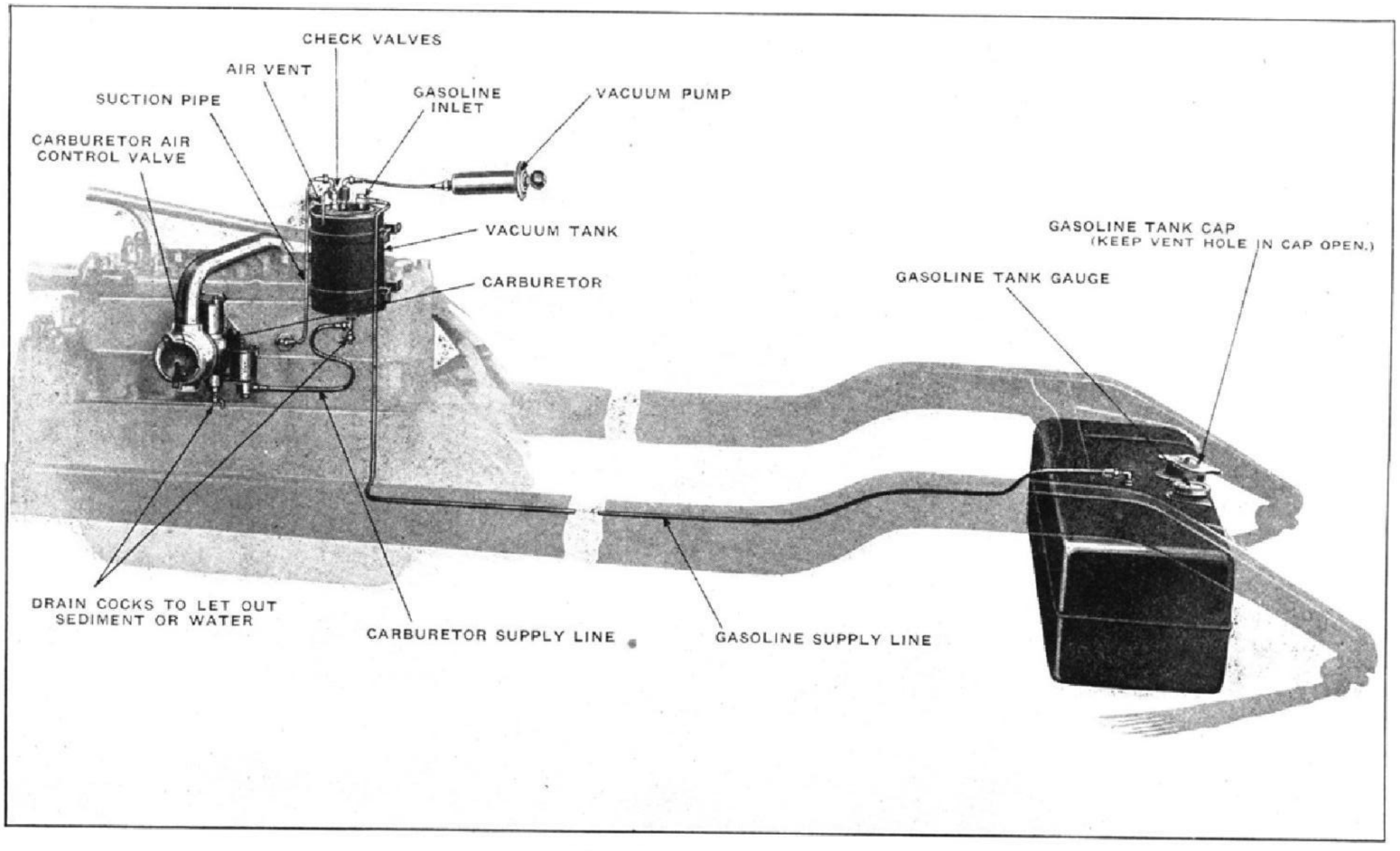

The Gasoline System

There is only one pipe leading from the gasoline tank forward. This is the pipe which connects to the Stewart Vacuum tank at "D," (See page 2 of booklet on Stewart Vacuum System.) The other pipe connected to the top of the Vacuum tank terminates in a union which is tapped into the intake passage in the cylinder blue. The suction at this point makes a like suction inside the inner compartment of the Vacuum tank and causes the gasoline to be drawn up from the tank at the rear of the car, through the pipe entering at "D."

The trap-valve at the bottom of the inner compartment prevents the entrance of air or gasoline except through the pipe connected to the rear tank.

As soon as there is sufficient gasoline in the inner compartment to raise the float valve "G" to a pre-determined level, the suction in the tank is shut off by means of the small valve "A." At the same time that this is closed, the air-vent "B" is opened, thereby releasing the gasoline in the inner chamber and allowing it to flow into the large tank through the trap valve "H."

If the tank is empty, it is obvious that cranking the motor with the throttle closed will soon cause sufficient suction in the inner compactment to suck the gasoline out of the rear tank.

The Vacuum Pump which is installed on the dash can be used for priming or for filling the Vacuum Tank should it ever become empty; it necessary to turn over the engine, but merely pull the plunger in Vacuum Pump two or three times, which will create sufficient vacuum in the tank to draw gasoline from main supply tank.

The Stewart Company have issued a very interesting booklet and parts list on their system, a copy of which is included in the equipment of every Hudson car.

On no account attempt to take the tank apart or make adjustments to it unless you have thoroughly familiarized yourself with the principles on which it operates. It is a simple device, but a novice can easily make trouble for himself unless he understands the mechanism thoroughly before attempting any changes or adjustments.

The Hudson Carburetor

A glance at the illustrations on pages 34 and 35 shows very clearly the principles upon which this carburetor operates.

Aside from the periodical cleaning out of the screen at the base of the float chamber and draining off any water or sediment which may have accumulated below the regulator, there is absolutely no maintenance or intricate adjustment in connection with it.

The gasoline "measured out" by the measuring in, may be varied by the gasoline feed regulator which is connected to the lever on the dash. In cold weather it is to be expected that a little richer mixture will be required. In warm weather, it may be set to a leaner mixture.

For high altitudes, where air is at a lower atmospheric pressure, proportionately less gasoline will be required. These adjustments are immediately accessible to the driver.

There are no nozzles to change, no matter what the conditions require.

The gasoline consumption of this carburetor depends entirely upon the performance of the car and the ability of the driver to regulate the feed to meet his requirements,

It is obvious that if the maximum performance is needed, more fuel will be required to obtain that performance,

For the average user, or for the man who is interested in obtaining great economy, the mixture may be set to run as lean as the driver desires.

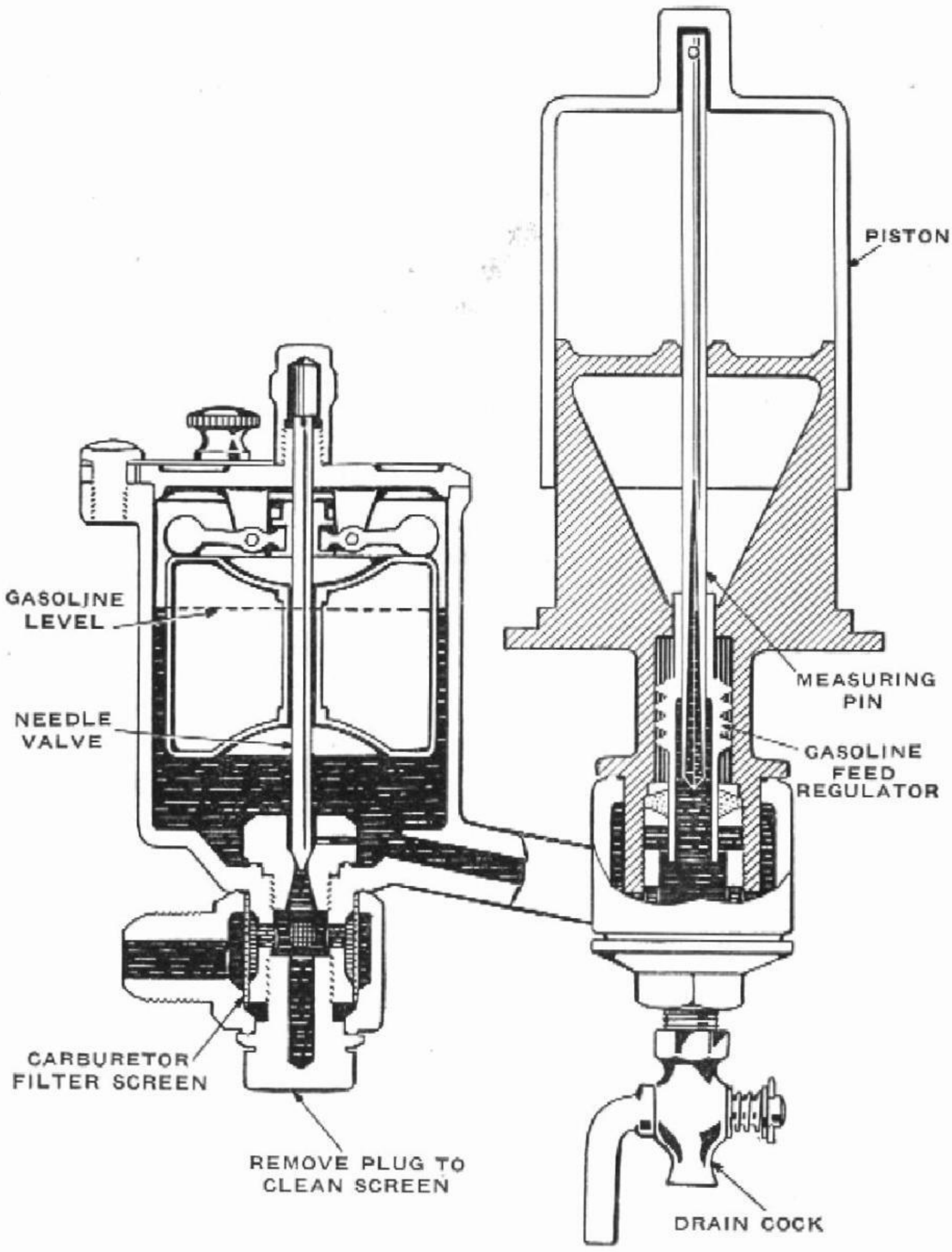

Carburetor Gasoline Level

Lubrica

Merely screwing down the grease cups will not give the desired resu

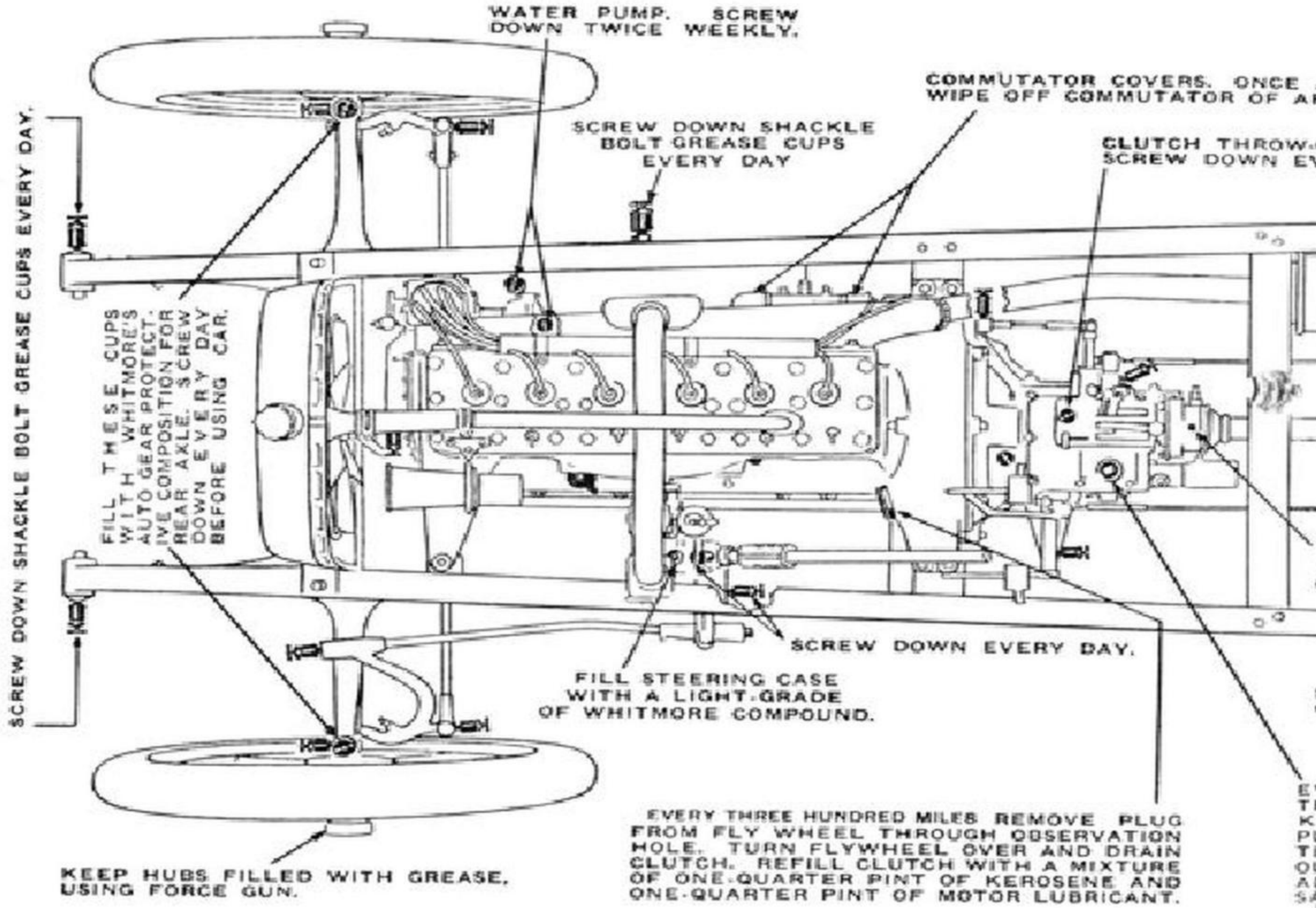

NOTE:—Every fifteen hundred miles, drain all oil from the motor by
crank case through the filler on left side of motor, and turn the motor over
fresh motor oil until the oil indicator on the left side of motor shows "FUL
is laid up for the night, and while the motor is still hot, pour in each primi
night. In the morning start the motor in the usual manner.

ting Chart

lts; see that the grease is actually oozing out from such parts all the time.

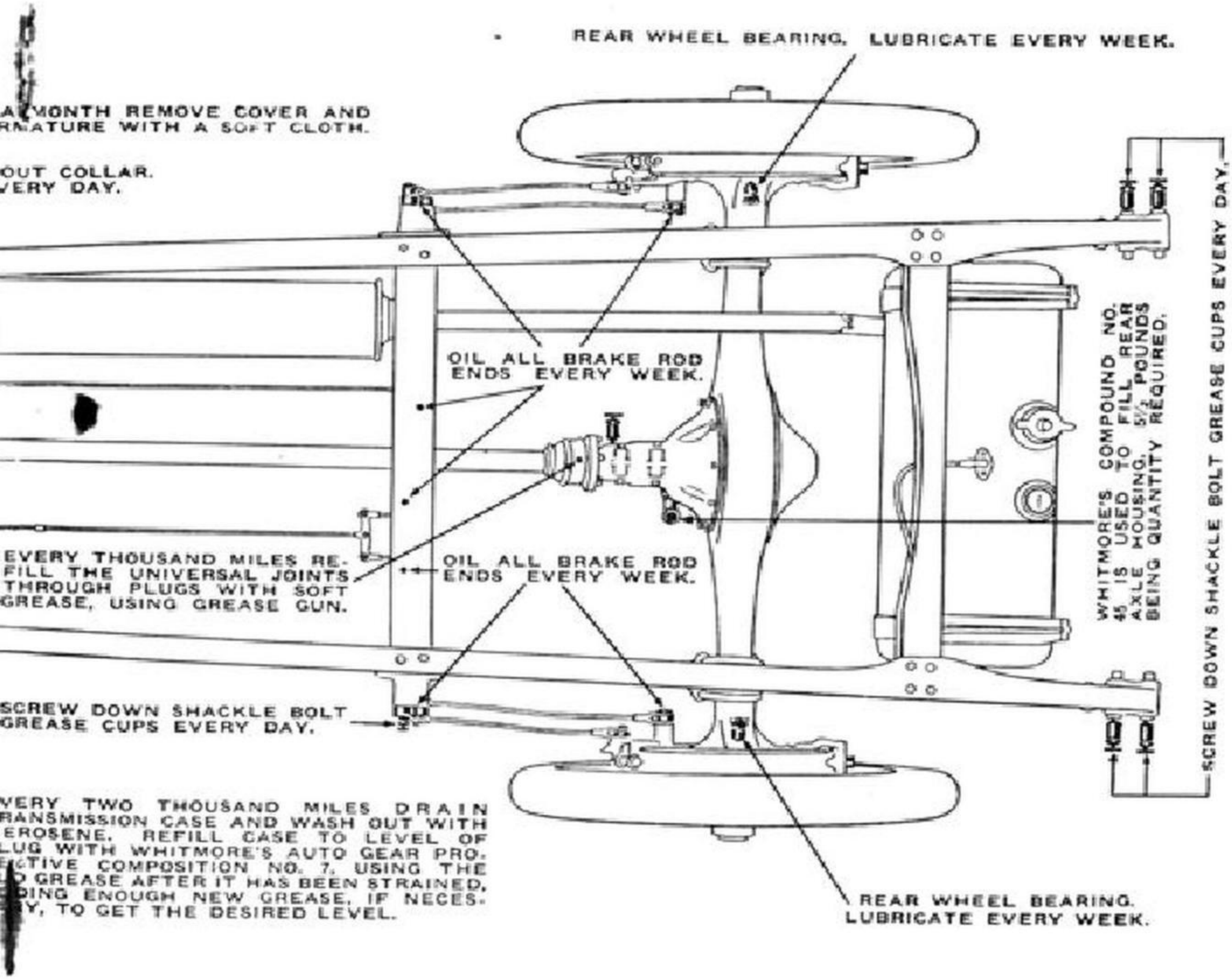

removing the plug at the bottom of the oil reservoir. Pour kerosene into the with electric starter for a minute. Stop motor. Drain out kerosene and add L." This should require approximately 3 gallons. Once a week when the car ng cock abous three teaspoonfuls of kerosene, close them and let stand all

Bear in mind, however, that reducing the proportion of gasoline to air, gives a little less power and acceleration. Setting it in the right proportion (which must be found by adjustment, according to climatic conditions), results in maximum power and consequently a little higher fuel consumption than some owners wish to tolerate.

Setting it to give too rich a mixture results in carbonization, misfiring and increases the wear and tear on the moving parts of the motor.

IF YOU FIND IT NECESSARY TO ENRICH THE MIXTURE FOR STARTING PURPOSES, DO NOT FORGET TO RE-ADJUST IT TO THE LEAN POSITION AS SOON AS THE MOTOR WARMS UP.

Do not have the air control]ever in the "hot" position when driving more than 25 miles an hour. The increased resistance to the air intake causes proportionately greater throttle opening than is necessary for the power developed and results in excessive gasoline consumption.

Use Good Gasoline

Those owners who live in territories where extremely cold weather prevails in the winter, will be interested in knowing the advantages of using high grade gasoline. The common fuel sold as gasoline is extremely low test and seems to be deteriorating in quality each year. As a fuel, it leaves a great deal to be desired, but for obvious reasons must be endured, either until a better grade is manufactured for universal consumption, or a new fuel is evolved.

At temperatures ranging from 20 deg. F. to 5 deg. below zero, the low test fuel will be proportionately difficult to ignite when cold, and at 5 deg. below zero it will be practically impossible to ignite it.

It should be borne in mind that high test gasoline may cost two or three cents more per gallon, but the amount of gasoline used in warming up the motor will be much less, and therefore the general economy will be increased. It will not actually result in a saving in fuel cost, but it will mean much less annoyance and, at least, not more than equal cost.

With a low grade fuel, it is necessary to choke the motor and frequently to prime it before the fuel will ignite and the motor can be started. It is then necessary to run the motor with the choke closed for two or three minutes in order to get it hot enough to get the benefit of the hot air pipe and aid in volatilizing the fuel and eliminating the necessity of the choke. Even with the low grade fuel, the carburetor will operate satisfactorily in the winter time if the motor be thoroughly warmed up before the car is driven. With the high grade gasoline, it may be necessary to use the choke to start the motor, but it will be possible to get it into the hot air position immediately after starting.

It should be understood that when the choke is closed, the suction in the carburetor is terrific and the volume of gasoline drawn out and used to run the motor for three or four minutes under these conditions would ordinarily run the car a mile. This is why gasoline economy decreases in cold weather. The less the necessity for using the choker, the greater the economy, hence the reason for keeping the motor warm whenever possible and using high grade fuel.

Every Hudson owner should try a tank full of 70 test gasoline. He will soon be convinced that it is well worth the extra cost.

If the car is stored in a cold garage, and difficulty is experienced in starting up in the mornings it would be well to consider the installation of a cheap stove or heating device to keep the temperature in the immediate vicinity of the engine not lower than 30 deg. A small thermometer is a very handy article in any garage in winter, as it will usually explain reasons for the long time it takes to start the motor. This must be taken into consideration before complaining.

especially must it be remembered that constant cranking is a severe drain on the storage battery. It is also interesting to note that the storage battery is affected by temperature and will not operate as efficiently at zero as it will at 60^0 which is the ideal temperature for a battery. At 5 deg. below zero, the efficiency of the battery is considerably reduced. This is unavoidable with any style of storage battery.

We therefore urge every Hudson owner, who has a private garage, to install some heating system to facilitate starting and save gasoline and the storage battery. If a stove is not desirable, a 100-watt tungsten lamp placed under the hood and left burning every night will go a long way toward keeping up the temperature. A blanket thrown over the radiator will help to retain the heat generated in the lamp. A thermometer will prove very handy for comparison in case of trouble.

The Springs

Spring breakages are an infrequent occurrence on modern automobiles of good design. But it is possible, by limiting the flexibility of a spring through insufficient lubrication (either of the shackles or the spring leaves themselves), to impose upon it such heavy duty and excess friction as to affect its riding qualities and resiliency. In addition, the tendency to crystallize and break is considerably increased.

Well designed springs will stand a great deal of abuse, but, like all moving parts, they require attention occasionally.

A certain amount of mud works into the small spaces between the leaves and destroys the effectiveness of the lubricant. In this condition, the springs stiffen up because the leaves cannot slide freely against one another.

Lubrication of the spring leaves and shackle bolts is the best way to insure long life to the springs.

THE CAUSE FOR SPRING BREAKAGE IS NOT ENTIRELY LIMITED TO NEGLECT OF LUBRICATION.

Perhaps the most common cause is the loosening up of spring clips, those U-shaped members which clip the springs to the saddles on the axles. To prevent the possibility of the nuts loosening, we use an extra long nut with a check, or lock nut, on top of it. Despite these precautions, the enormous strains to which these springs are subjected make it possible for them to loosen up.

IT IS THEREFORE ESSENTIAL THAT THE SPRING CLIPS BE TESTED FOR TIGHTNESS AT LEAST ONCE A MONTH, OR EVERY 2,000 MILES.

Storing the Car for the Winter

Be sure to store the car in a dry place. Any dampness coming up from the floor will reach the exposed metal parts of the chassis and rust will start making inroads that are decidedly detrimental to the life of the car.

You can avoid any tendency to rust by rubbing a small quantity of vaseline (not cheap grease) over such parts as the dash equipment, hub caps, transmission levers, hood clamps, carburetor control rods, exhaust manifold, grease cups and all Delco connections and spark plugs. These being of brass or nickel plate, tarnish easily. Also rub vaseline into the various comers and crevices of the splash guards, particularly where they join the fenders

Jack up all four wheels and let out the air from the tires.

Drain water from radiator plug (right hand corner from person sitting in the driver's seat).

Take out the spark plugs and pour in each cylinder a spoonful of castor oil. Then replace the plugs.

Drain all oil from the reservoir and pour in a gallon of castor oil, then allow the motor to run a few minutes until you know this oil has had an opportunity to cover all the connecting rod hearings and other moving parts on the inside of the motor,

The battery should show a specific gravity of from 1-275 to 1.300 at the time you are storing away the car. In this condition, there will be no danger of freezing at any temperature above 40' below zero, F. During this out of service period, the battery should be charged every two months if possible, by running the engine for two hours at a speed of approximately 100 R. P. M., or from an outside source.

Should either of the above methods be impracticable, and if there is no charging station to which the battery can be conveniently sent, it can he left standing all winter providing the specific gravity of the battery registers between 1.275 and 1.300 at the time the car is laid up. In such an instance I however, the life of the battery will be decreased. Much better results are obtained if it is charged periodically every two months.

Disconnect the wires from the battery to avoid any leakage through a short circuit. If you can conveniently do so, store the battery in a warm, dry place, rather than in the car. In the event that it is removed from the car, it is a good plan to keep it wrapped up in burlap and covered with a quantity of newspapers to prevent dust and moisture getting to it

The car should be covered with a tarpaulin, or a regular car cover.

STUDY THE BATTERY MANUAL SUPPLIED WITH THE CAR AND RIGIDLY FOLLOW ITS INSTRUCTIONS IN REGARD TO BATTERIES IN STORAGE.

Action of Lubricants At Low Temperatures

The stagnation and solidifying of the lubricants is another point that must be taken into consideration during the winter months. Oil cannot flow as fast when it is cold as when it is thoroughly warmed up. Racing the motor after starting, particularly after it has been standing in a cold garage, is very apt to cause burned out bearings. This is simply because the oil did not get to this bearing in time, due to its solidified state. It is easier to warm up the motor with the throttle slightly opened and the hood cover on, than by racing it violently immediately after it is started.

You will avoid the possibility of serious motor trouble by heeding these instructions,

The lubrication of the clutch and transmission is also important. Cold or congealed oil in the clutch causes the plates to stick together, Heavy oil has more of a gummy nature than light ail and the tendency of the clutch discs to hang together is greatly increased, the result being a dragging of the clutch. To avoid this, never allow the oil to remain in the clutch so long that it becomes old and gummy. Make sure that it is of light enough quality to counteract the action due to the increased viscosity after standing in the cold.

If this tendency to drag is very pronounced after making the first start in the morning, release the clutch and put the required gear into mesh before cranking the motor. This eliminates the necessity of shifting the gear after the clutch is spinning, which will save the gears.

Grease hardens to a greater degree than lubricating oil and there are some grades of grease which actually freeze when subjected to cold a few points below zero. It takes considerable heat to put this grease into a fluid state where it will do efficient work, and unless this point is accomplished within a reasonable time after you have started the car, you are in danger of mining the transmission or rear ante bearings.

occasional washing may be continued, but cold water applied in a cold place at a frigid season of the year is injurious to the varnish.

When the car is in daily use or following each period of road service, the varnish should be washed, top cleaned and the interior furnishings of the car renovated.

Things to remember: Never wash the car in bright sunlight. The am dries the water up too rapidly, and causes streaks in the finish. Always use absolutely clean water and change it often to keep it clean, Never turn the hose on the body unless the stream is so broken up that it does no more than spray the body, but we advise the use of the pail and the sponge in preference to the hose.

Clean Top First

Before starting the washing of the car the top should receive attention. The Pantasote can be sponged off with clean tepid water, and when coated with road dust or mud, this water should contain enough Castile soap to provide sufficient alkali to cleanse, Follow this cleaning by drying with a chamois skin.

Washing the Body

Begin washing the body by dipping the sponge well into the water, in order to pick up as much water as it will hold, then begin at the top of the panels and gently dash the water obliquely against the panels. Another way is to squeeze the water out of the sponge at the top of the panels to loosen the dirty accumulations, and cause them to drop off. These instructions are for cars that are washed immediately after road service.

When Washing is Delayed

Provided the car has been put away for the night unwashed, and the mud and other road refuse allowed to dry on to the finish, it will harm the varnish to apply water and attempt to remove these dry, crusty accumulations at once. All such surfaces should have plenty of fresh, clean water run down in an easy volume over the finish, Continue this practice until the dirt encrusted surface is thoroughly soaked up. Then let the work stand for 15 or 20 minutes for the water to so act on the body of dirt and mud that under a fresh flow of water it will readily run away without injury to the finish.

In all cases the mud and dirt should be floated off by a natural flow of water rather than wiped off. This latter practice usually results in the finish being scratched and disfigured by the grit and dirt. It must be understood that a water-loaded sponge drawn or rubbed over a dirty or mud-bespattered panel develops a scouring effect. This diminishes the brilliancy of the varnish and reduces its capacity for protecting the undercoats.

The Second Washing

After concluding the first or preliminary washing of the surface a new sponge and a new pail should be taken in hand and the surface again washed with a fresh supply of clean water. A soft wash brush, oval in form, and chisel pointed, should be used to tool around the surface ornaments, mouldings and other attached body fixtures. Such places cannot be effectively reached with a sponge.

Use the same care and precautions in washing the chassis and under no circumstances employ the same tools for the body and the chassis and vice versa. In this way avoid transferring grease and oily stains from one part of the car to the other.

Drying the Body and Chassis

For drying off the water from the body of the car or chassis use a chamois drying free from lint and absolutely clean. Wring the chamois out after rinsing in clear water, or if dirty after washing out in a solution

Advice to the Driver

One of the first things that a new driver learns is the advantage to be derived from consideration and courtesy extended to others using the public highway.

Most drivers know that they we expected to turn to the right when approaching a vehicle, or to the left in overtaking arid passing a slow moving vehicle going in the same direction.

After they have come to realize the accuracy with which their car may be steered and the case with which it may be called upon to pan and leave behind another vehicle, possibly approaching from the opposite direction, it seems natural for some drivers to display their nerve in not turning from the center of the road until they are almost upon the approaching vehicle, Often, however, the other fellow has as much courage and takes the same stand, and in the confusion which very frequently follows, either one or both cars are damaged on account of collision.

In passing vehicles which we approaching, as large a margin of space as possible should be afforded, and in passing a slow-moving vehicle ahead, pass him as quickly as possible and without cutting in short ahead of him.

CITIES CONTROL TRAFFIC - The lack of consideration on the part of a few careless drivers has resulted in the adoption of very strict municipal regulations governing traffic,

Those who are familiar with city traffic regulations and apply them as well on country roads, will not be likely to encounter difficulties.

The burning of at least three lamps, including two head or side and one tail lamp, is enforced from sundown to sunup in practically every state.

We have provided a dimming coil to be used in connection with head lamps so that side lamps are not necessary.

INTERSECTING ROADS - In approaching an intersection, either in the city or in the country, where a clear vision of the road approached cannot be had on account of buildings, fences, etc., obstructing the view, the car should be slowed down to a speed at which it can be readily stopped in case of the approach of another vehicle from either side.

TURNING INTO ANOTHER ROAD - In turning a vehicle into another road to the right, the driver should keep his car as near the right-hand curb as practicable, as shown on Fig. 1.

In turning into another road to the left he should turn around the center of the two and as in Fig 2. No vehicle should be slowed up or stopped without the driver thereof giving those behind him warning of his intentions to so do, by proper signals.

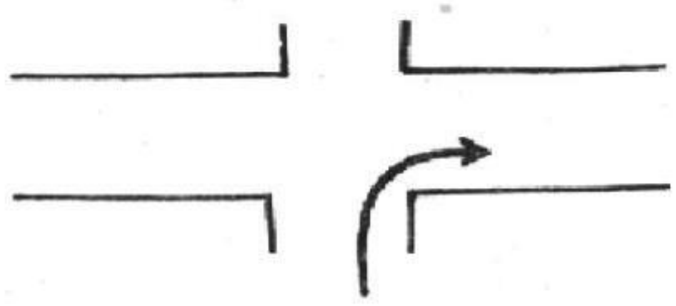

Fig. 1

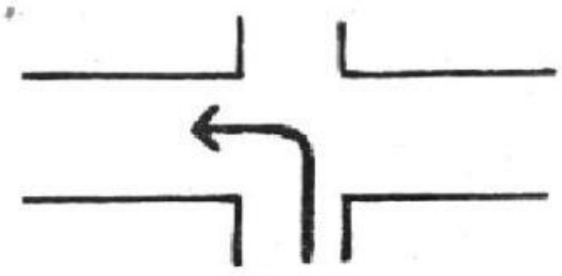

Fig. 2

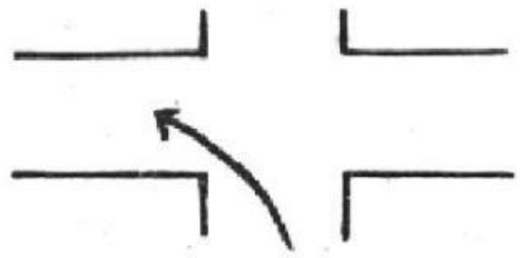

Fig. 3
Not This Way

APPROACHING RAILROADS - In approaching a railroad crossing, especially if there is an incline or grade, the car should be dropped back into second speed and the approach made carefully, first to determine whether to make the crossing or not, and second, to be in position to accelerate your car suddenly with very little chance of stalling your motor.

Many accidents have happened because inexperienced drivers have become confused and stalled their motors. On noting the approach of the train, they have thrown on their power, or let in their clutch suddenly, with the result that the motor is stalled and it is then too late to move out of danger.

FRIGHTENING HORSES - Often drivers of horse-drawn vehicles become confused if their horses are frightened by the approach of an automobile and in drawing up the horses sharply to one side the animals are liable to jump or rear with the result that the vehicle may be overturned and the automobile injured as well. In cases of this kind, it is better to stop the machine entirely and if necessary, even stop the motor.

CHANGING GEARS - More accidents result from unwillingness to change gears than from almost any other cause. Most American drivers use their first and second speeds only in starting their car. They allow the car to drift along and thus get into a tight place in traffic or too close to street cars and because of misjudging the speed of the approaching vehicle or their selfish desire to crowd out another car, collisions or other accidents frequently result

It is a simple operation to change from third to second speed. It increases your power and affords the possibility of a great deal quicker acceleration as well.

The second speed is incorporated for a purpose. It is seldom that we are in such a hurry that we cannot spare a moment to afford absolute safety,

ACCIDENTS NOT DUE TO LOSING CONTROL OF THE CAR - Accidents are not due to the driver losing control of the car in many instances, but are more likely due to his losing control of himself. One is not an expert driver until he intuitively performs the operations which control the car just as he walks or reaches out for an object.

WHEN THE CAR SKIDS - Although the driver feels helpless at first a little experience will soon give him confidence

Most skids can be corrected by the manipulation of the steering and brakes. An expert driver can keep his car straight under almost any conditions, but it is impossible to explain just how he does it Usually the rear end skids first, and in the right hand direction, this being caused by the crown of the road. Under such conditions, the skidding action will be aggravated if the brakes are applied, and the car may be ditched or continue to skid until it hits the curb.

The correct action in an emergency of this kind is let up on the accelerator pedal to shut off the power; but not entirely so, or it will have 'he same effect as putting on the brake. If the car seems to right itself, the power may be applied gradually and it will be advisable to steer for the center of the road again. However, if the car continues to skid side. ways, steer for the center of the road, applying the power gently. This will aggravate the skid for the moment, but will leave you with the front wheels in the center of the road and the car pointing at an angle. By so doing you can mount to the crown of the road again and the momentum of the tax will take the rear wheels out of the ditch on the right hand side. It is customary to advise turning the front wheels in the direction that the car is skidding in order to correct the action but this can hardly be said to be true in all cases, as the amount of room on the skidding side is somewhat limited, and for this reason, the explanation given above will better apply to such a condition.

No machine can be absolutely automatic. All things must wear in time. The best preventive of wear, and the most certain thing for increasing the life of an automobile, is proper lubrication.

Familiarize yourself thoroughly with all the lubricating points of your car. The chart, sent out with your car, will show you where each one is located. Make the lubrication of your car as regular as is the eating of your meals. If you do this, you won't have any complaint to make of your car becoming noisy or of bearings wearing out. If you don't do it, you will not get the satisfaction from your car that you had expected.

USE YOUR SPARK CONTROL LEVER - Few amateur drivers realize the advantages of the spark lever as a smooth driving aid.

But you will note that the expert, who makes such wonderful demonstrations, giving the car the feelings of a thing of life, nearly always has his hand on the spark lever, It is only when a level road stretches ahead of him that he seems to relinquish that little lever and you naturally assume that it is because he needs both hands on the wheel. It is because he uses his spark according to his speed that he obtains that smooth slow down in the traffic, without seeming to need a foot-brake at all; and that easy pickup on high gear, with no signs of motor labor, that makes a six-cylinder car so attractive.

The Law of the Spark is simple. When you have mastered it you can demonstrate to yourself all the time.

You have noticed that Your motor does not run smoothly, when idle, if the spark is advanced, but it invariably hits on all six like a clock if the spark is retarded. "There's a reason." The advanced timing of the ignition is a necessity when there's work to be done by the engine, as in propelling the car, but it becomes an evil if the engine is running light. Hence, the necessity of retarding it whenever there is no work to be done, as in coasting or idling.

The idling has been reduced to a minimum by the introduction of the self starter. The coasting has been made more pleasant by the Six, which has the same continuous pull as a brake, as it has torque when functioning as a motor.

The pickup is much improved if the spark is gradually advanced as the motor gains speed, bringing the lever up to about "halfway" at the first touch of the accelerator and then advancing about half an inch for every five miles per hour as the car gains speed. This, of course, applies to picking up from a low rate of speed, say, ten miles per hour, and in a lesser degree at greater speeds since the car has greater momentum and the motor, therefore, less work to do.

COASTING MOUNTAIN ROADS - Wherever you approach a long and steep grade, it is best to put your gear speed lever into first speed and allow the car to drift down on the motor. This is better than using the brakes. It gives you absolute control of the car at all times.

KNOW YOUR CAR-Your satisfaction will be greatly increased if you will learn the details of your automobile. Learn to make the simple adjustments. They are all described here. Do not depend upon some one else to do that which is so simply done and which you can get such satisfaction in doing. There is nothing complicated nor complex about the HUDSON SUPER-SIX. There are no inaccessible parts that should interfere with ready adjustments, Familiarize yourself with every detail of the car as it is explained in this book and You will have greater confidence in venturing over any road at any distance from a repair station.

THE COST OF SPEED - The law is just as immutable in that it collects as great cost for speed in a motor car as it does of any machine or of man. If you run fast, if you work hard, you require more food to sustain you. If you drive your car at a fast speed all the time, it requires more fuel-more gasoline and more oil.

If you work fast and hard, you wear out more quickly, and so does an automobile.

Tires, for instance, last twice as long on a car that is driven at fifteen miles an hour as they do upon cars that are driven at thirty miles an hour.

Remember that the service your car gives you is as much dependent upon the manner in which you operate it as is your own health dependent upon the manner in which you care for it.

KEEP YOUR TIRES INFLATED - Do not use them when they are soft. There should be a pressure of 75 pounds per square inch in the rear tires, and 70 pounds per square inch in the front tires. A tire pressure gauge is a good investment. It adds mileage to your tire service.

USE OF HEAD LIGHTS - Do not use the electric head lights turned to the "bright" position when approaching or passing a car or other vehicle on a narrow road, unless you are traveling in the same direction. The light confuses them and may result in a serious accident.

Carry a Complete Tool Equipment

By all means have the necessary tools at hand to meet an emergency; even though you do not need them yourself, there is a certain amount of satisfaction in knowing that you are equipped to help a fellow motorist who is less careful in this respect.

In changing a tire, jack, wrench, pliers, and sometimes a hammer are necessities. If you do not have them with you, it may necessitate running many miles on the rim, thereby ruining a good cover, damaging the rim and perhaps loosening up the spokes in the wheel.

Carry the tools in the tool satchel supplied with the car, and wrap the jack and other tire tools in clean rags to prevent their rattling. A little oil should be rubbed on them occasionally to prevent rusting. It will often save soiling your gloves through handling dirty tools.

If you are carrying spare tubes, keep them away from any grease and oil, which will injure the rubber. Do not pack them in with the jack and other tools that are liable to chafe or cut them

TO KEEP WATER FROM CLINGING TO WINDSHIELD - If you are in a climate where snow and sleet are a common feature of the weather for any lengthy period, you can keep the windshield clean by wiping it over with a solution of water, glycerin and salt. The proportions are:

1 oz. water
2 oz. glycerin
1 dram salt

Pour this on a piece of gauze and wipe the glass with all the strokes downward. This will prevent rain drops or water in any form clinging to the glass.

The Electric System

Fifty per percent of all electrical troubles, whether oil your automobile or in your home, are due to faulty contacts and loose connections in the wiring. If it were possible to solder all connections permanently, there would be little work for the service man.

The vibration of a car will loosen the connections no matter how well the original installation is made. Our advice is, go to your dealer for an inspection periodically or, better still, familiarize yourself with your car so that these little attentions will be given by the hand that is so largely responsible for its condition.

The Electric System in the New Hudson Super-Six

Further progress has been made towards improving and simplifying the starting, lighting and ignition system. The single unit system is retained, i e., the motor and generator form one unit, the ignition distributor being separately mounted and driven by means of spiral gears from the pump shaft.

There are four separate sections to the system:

Generator-for supplying current.

Motor-for cranking the engine.

Ignition-for supplying the spark to spark plugs.

General Utility-for furnishing current to lamps, horn, etc.

The storage battery is essential to all of these parts of the system.

In connection with these different sections there are different circuits or "Paths" for the electric current.

Generator Circuit

This is opened and closed by means of the ignition button on the combination switch. When the button is pulled out preparatory to starting the engine, current will flow from the storage battery through the generator switch (X. Fig. 1) then through the generator armature windings to ground. Current will also flow through the switch X-1 and the shunt field winding and thence to ground through the armature and ground brush. This causes the generator to act as a motor turning over slowly for the purpose of meshing the gears preparatory to cranking.

When the engine is running, the armature circuit and shunt field circuit are completed in the way above described but the generator is now being driven through the front end, or generator clutch. If the speed is above 7 or 8 miles per hour, current will flow in the opposite direction, i. e., from the generator to the storage battery, because the generator is producing electric current. The charging rate increases at higher speeds until approximately 20 miles per hour is reached. The current is then at a maximum. At still higher speeds the charging rate decreases. The highest charging rate is between the speeds of 18 and 25 miles per hour, experience having shown that cars which average a speed between these limits require the most current to maintain a properly charged battery,

A new feature of this year's generator is the third brush method of regulation as shown on Pages 52 and 55. Referring to Fig. 1 it will be seen that all the current passing through the shunt field winding must pass through this third brush. At the higher speeds of the armature the voltage at this third brush decreases, and less current will flow through the shunt windings thus weakening the magnetic field of the generator. This decreases the output of current at high speeds. The output can be varied by adjusting the third brush, Page 55. Moving this brush to the left decreases the charging rate; moving it to the right increases the charging rate.

The adjustment of this brush should not be changed except by an experienced workman, and must be carefully checked to make sure that the charging rate is not above the capacity of the generator or battery. The brush must be sanded to fit the commutator each time it is adjusted. Poor contact lowers the charging rate. If the charging rate is materially increased, the battery will be subjected to an overcharge and the voltage of the entire system will be raised. This will shorten the life of the lamps and battery and cause excessive burning of breaker contacts.

Fig. 1

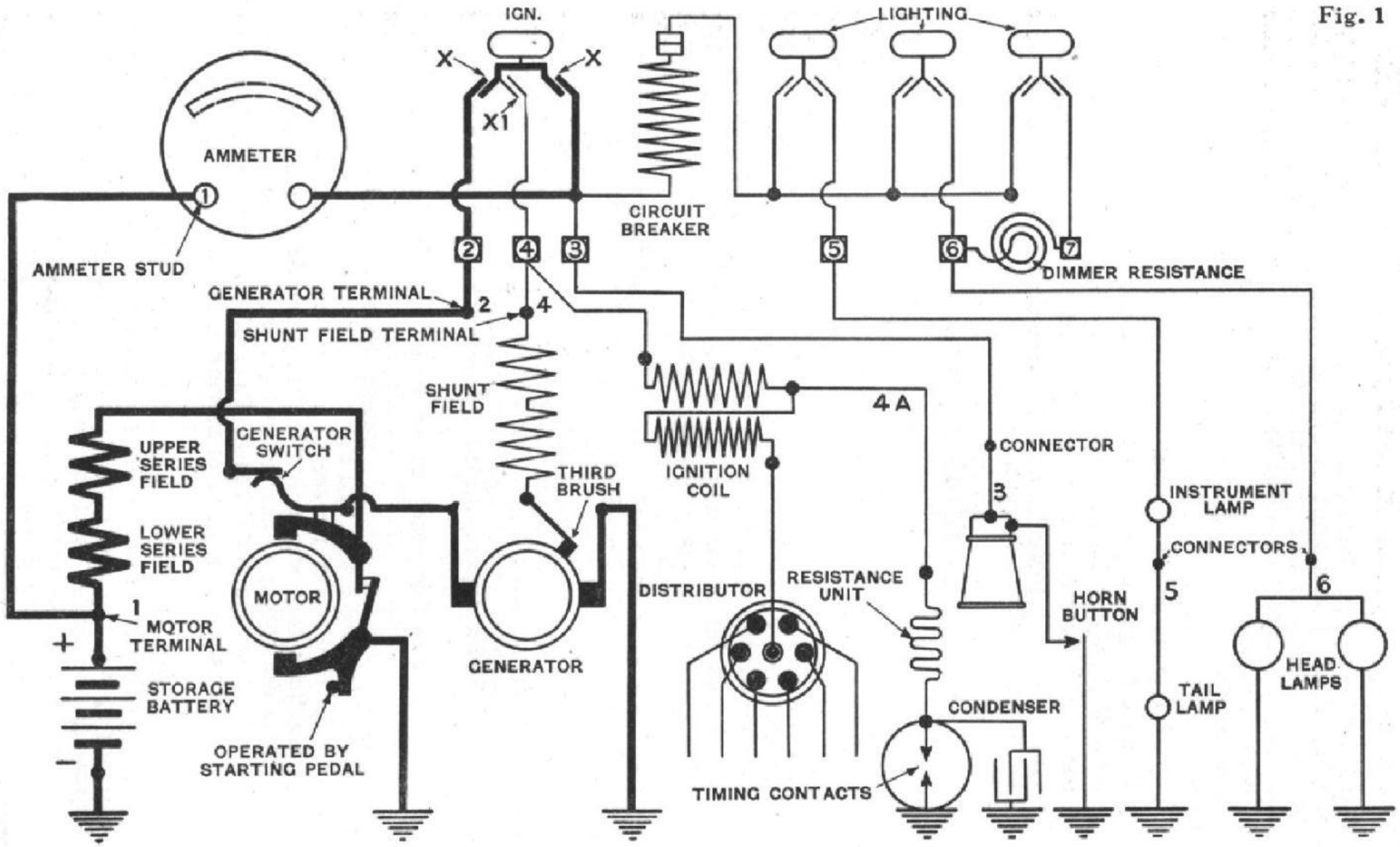

Wiring Diagram

Motor Circuit

When the starting gears are meshed as explained under "Generator Circuit," further depression of the starting pedal causes the generator switch to break contact, thus opening the generator circuit. When the starting pedal is FULLY depressed the motor brushes make contact with the motor commutator, thus closing the motor circuit, and the cranking operation commences. The current now flows through the heavy cable and around the windings of the armature and motor field. During the cranking operation, current will flow through the combination switch at contacts X-1, Fig. 1, and through the shunt Field winding. Thus the motor operates as a compound wound starting motor.

Ignition Circuit

When the ignition button is pulled out, contacts X, Fig. 1 are closed. This allows current from the storage battery to flow through these contacts, then through terminal 4 to the ignition coil; then through the primary winding of the ignition coil and the timing contacts to ground. The high tension part of the ignition system produces the spark at each spark plug when the engine is being cranked, causing the engine to start and run on its own power. Note when the engine is running and delivering current to the storage battery the ignition current is taken direct from the generator instead of from the storage battery. Otherwise the circuit is the same.

Distributor and Timer

The distributor and timer is separate from the motor generator and is carried on the front of the engine above the timing gears. It is driven by spiral gears from the pump shaft.

The distributor consists of a cap or head of insulating material carrying one high tension contact in the center with similar contacts spaced equidistant about the center, and a rotor, which maintains constant contact with the center.

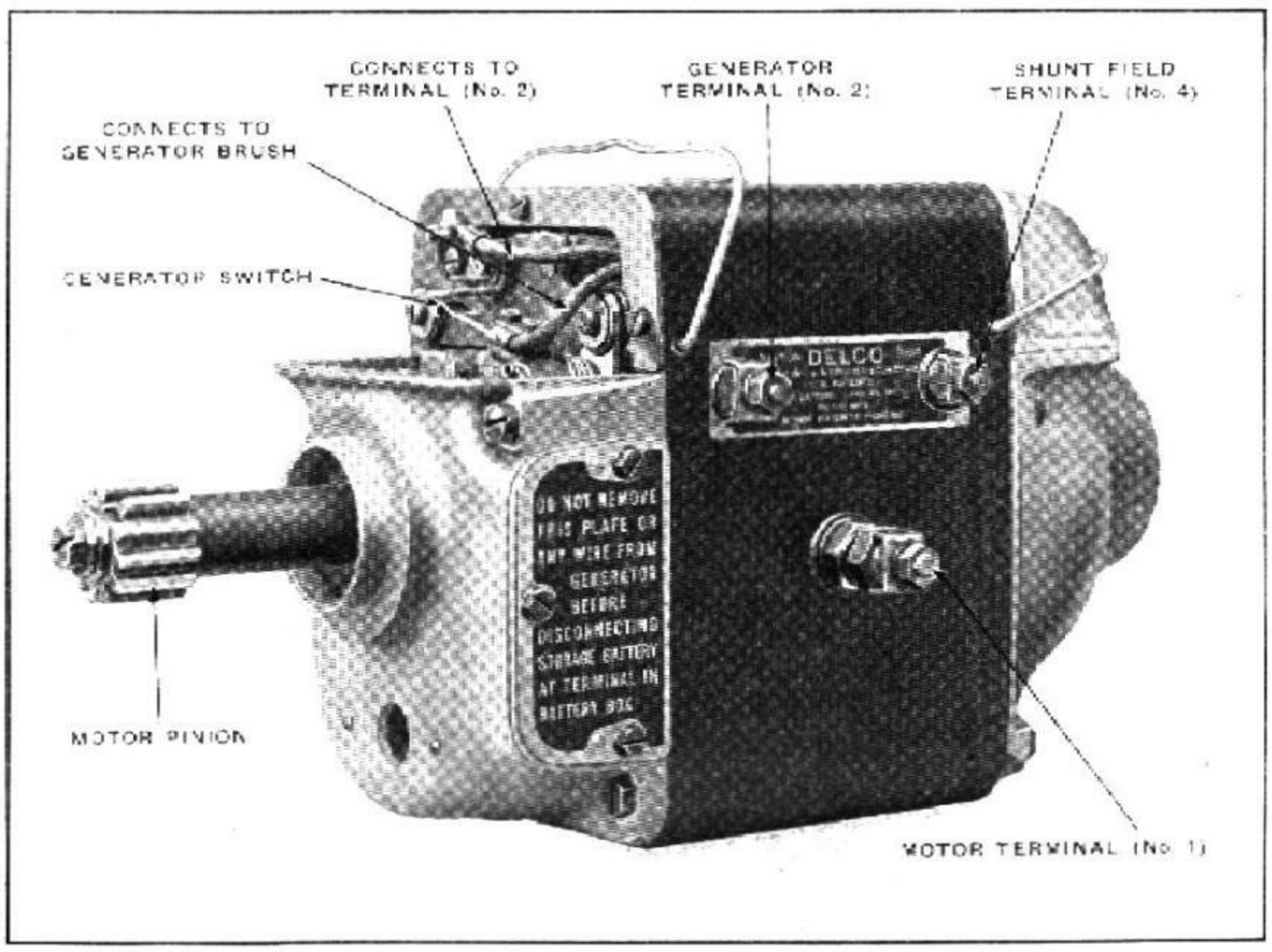

Side View of Generator

The rotor carries a contact button (Page 58) which serves to close the high tension circuit to the spark plug in the proper cylinder.

Beneath the distributor head and rotor is the timer. This is provided with a screw in the center of the shaft, the loosening of which allows the cam to be turned in either direction to secure the proper timing; turning in a clockwise direction to advance and counter-clockwise to retard.

Page 57 shows the top of the distributor with head and rotor removed. The construction of the contact points, breaker arm, and cam differs considerably from last year's model. The cam action in this instance opens the contact points while the closing is brought about by means of a flat spring.

See that the contact points, breaker and spring are in perfect condition and work freely. The contact spring should press the contact points firmly together when the cam is on contact. If the contact points show signs of pitting or burning they should be cleaned up so they have sufficient contact.

Sometimes a file is used to clean these points, with the result that the contact surfaces are not parallel. Do not file the points unless they are badly pitted. Contact points can be cleaned with a piece of very fine sand paper.

Before setting the ignition timing, it is essential that the contact points on the timer have a proper gap (See Page 57). If the gap is changed after timing the cam, the ignition timing will also be changed. The gap should be .018".

The mechanism for operating the automatic spark advance is shown on Page 58. The weights which are mounted on the disc move outwards as the speed increases, overcoming the resistance of the springs.

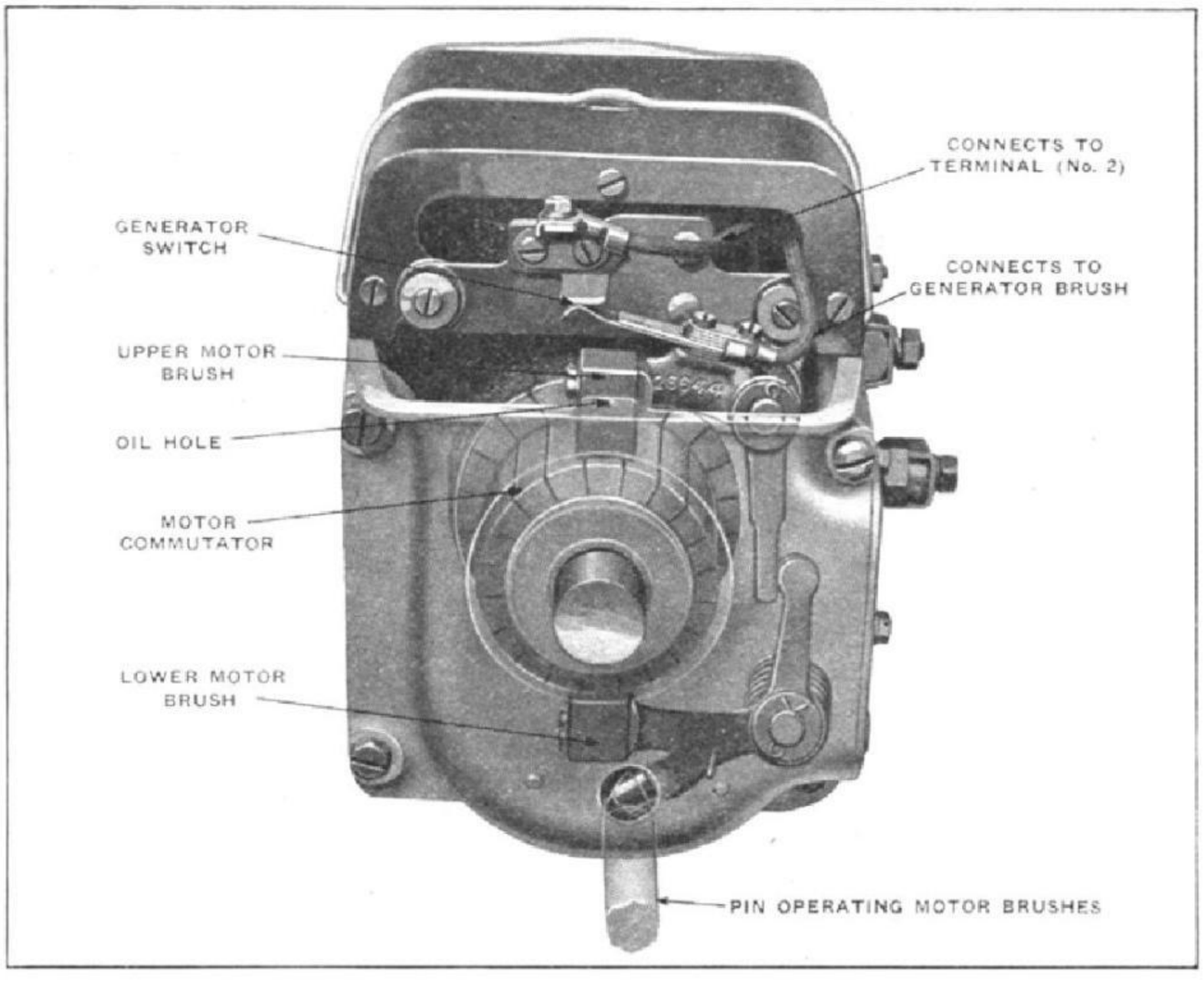

Motor Brushes

Loosen cam and set to break at this point. The adjusting screw on the cam must always be act down tight after changing this adjustment.

The spark occurs the instant the timer contacts are open. In checking the timing, the cam should be held on tension in the opposite direction of rotation so that all back lash is taken up when rotor button comes under No. I contact on the distributor head.

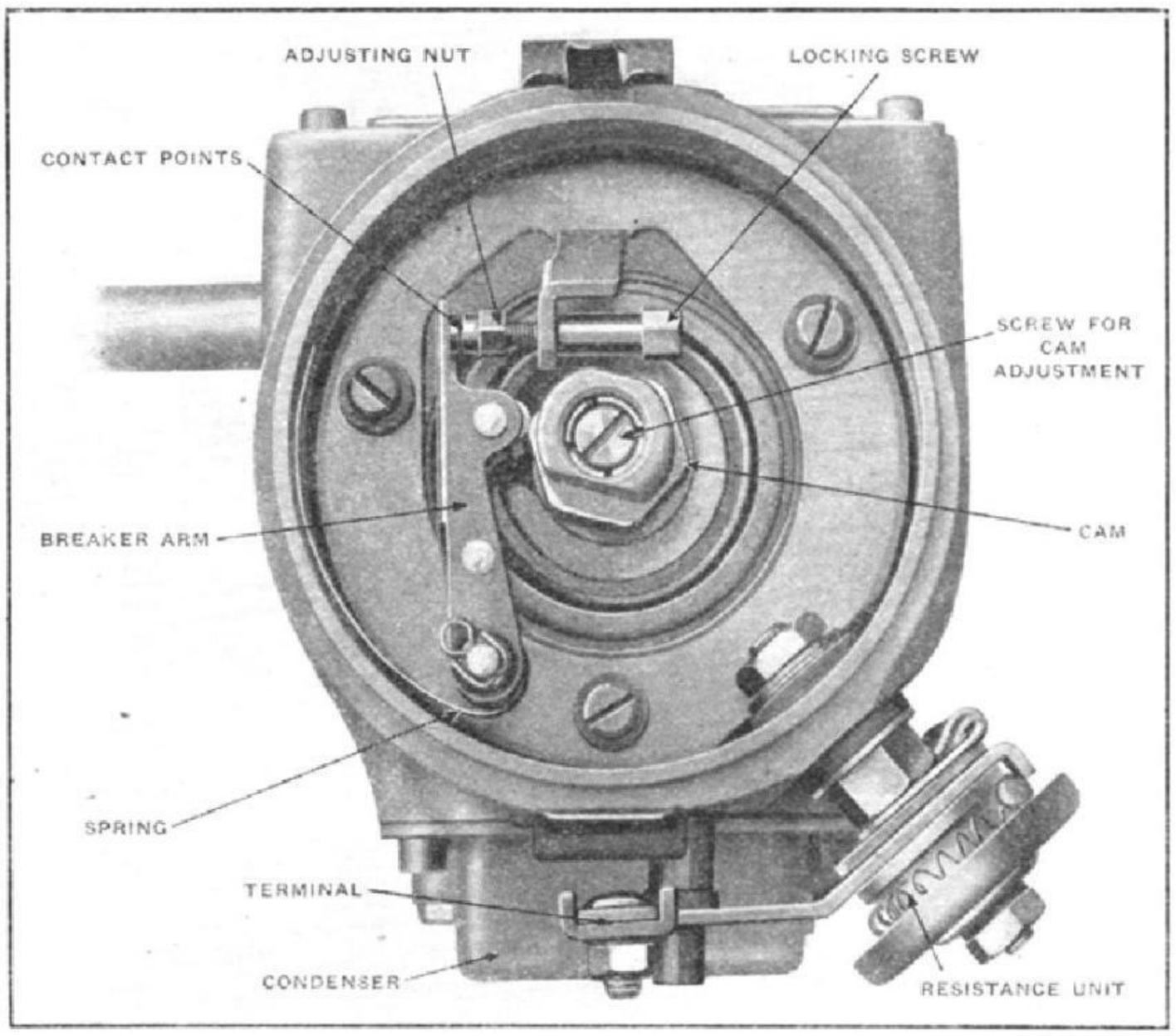

Distributor

After checking the timing, replace the rotor. Rub a little vaseline on the rotor track of the distributor head before seeing that this is down tight in position.

The Ignition Coil

The ignition coil is mounted on the dash, and serves to transform the low voltage in the primary circuit to a high voltage in the secondary circuit.

The coil consists of a primary winding of coarse wire, wound around an iron core in comparatively few turns, and a secondary winding of many turns of fine wire; also, the necessary insulation mid terminals for wiring connections.

The coil is equipped with a safety spark gap device to insure against secondary break down, if a wire is removed from a spark plug while the motor is running.

On the distributor is a "resistance unit," which is a coil of resistance wire wound on a porcelain spool.

Under ordinary conditions the wire remains cool and offers little resistance to the passage of current. However, if the primary circuit of the ignition should remain closed for any considerable length of time

when the motor is not running, the current passing through the coil will heat the resistance wire, thereby increasing its resistance to a point where very little current will pass. This insures against waste of current and damage to the ignition coil and timer contacts.

No attention is necessary except occasional inspections to insure that there are good connections between the wires and terminals, and that the top of the coil between the connections is clean.

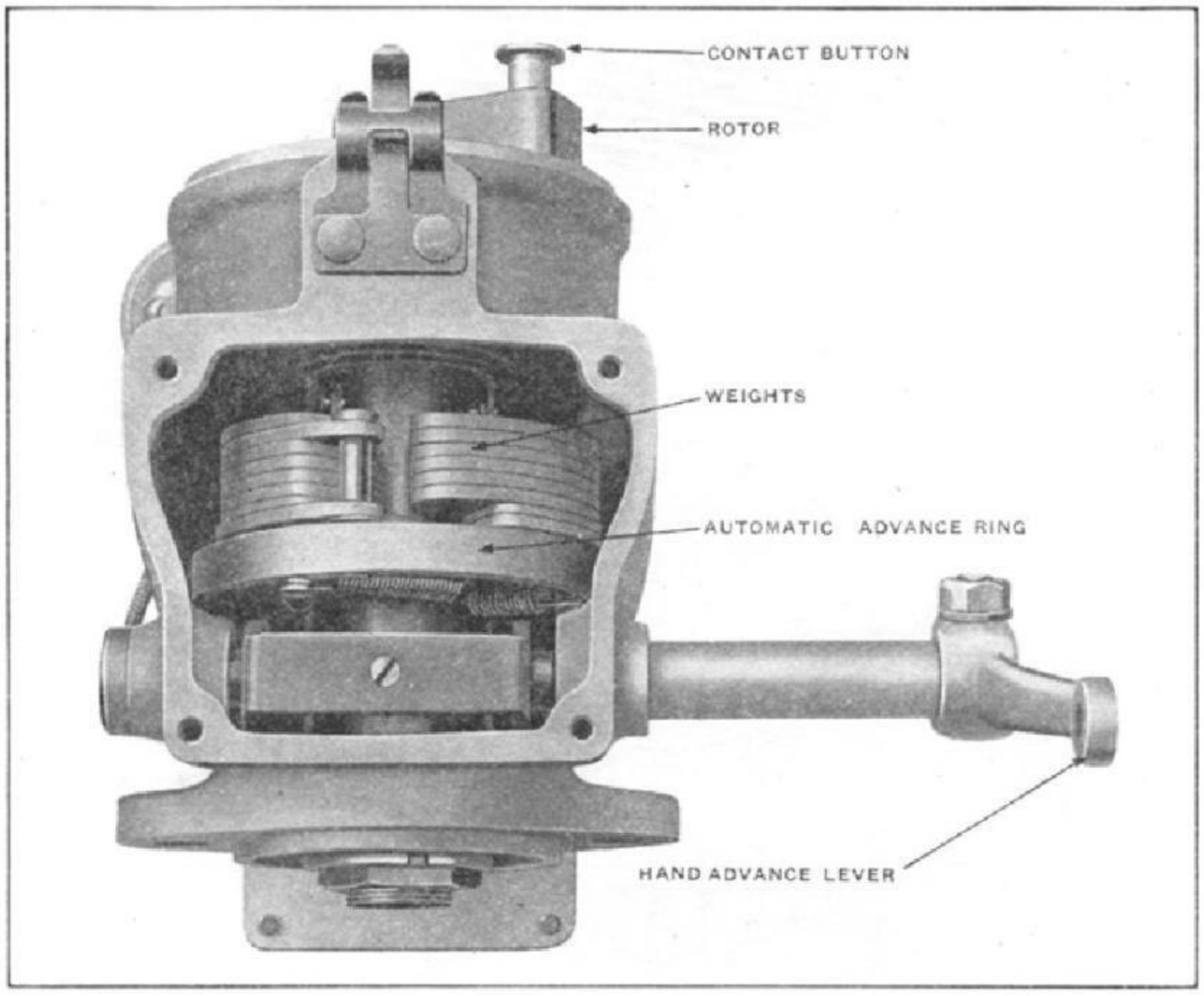

Automatic Advance Governor

Utility Circuits

Current for the horn is taken direct from terminal No. 3 on the combination switch. After passing through the horn it goes to the horn button in the steering wheel, where the circuit is completed to ground by pushing the button.

Current for the lights is tapped off the heavy line immediately above terminal No. 3, Fig. 1. It goes through the circuit breaker and is then distributed to the lights as follows:

The button on the extreme left of switch (i. e. the extreme right in Fig. 1) controls the headlights dim.

The second button controls the headlights bright.

The third button controls the instrument and tail lights.

Varying the Dimming of Headlights

We frequently receive inquiries on the possibility of varying the intensity of the headlights when the dimmer is in circuit. As this is more or less a matter of personal taste, and so easily accomplished, we believe the following information and diagram will be of value:

It is necessary to remove the switch in order to bind up one or more coils as shown below. The switch is held in place by four bolts which pass through the housing at the back of the switch. When these bolts are loosened. the housing will fall down. Therefore, the No. 1 wire which connects with the generator should be removed before dismantling the switch, otherwise short circuit will result and the wires may be burnt out. (See Page 60.) Tying one coil together will not make very much difference.

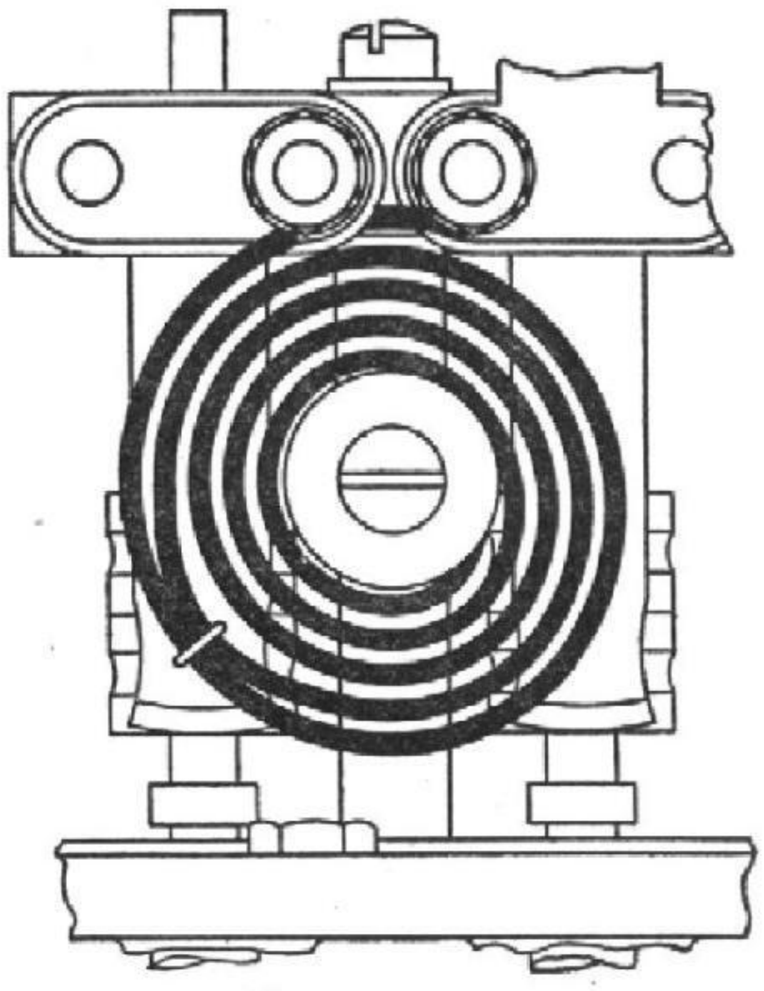

The Dimmer

Removing half of the resistance will make a considerable increase in the light given, almost too much for town driving, We recommend experimenting by short circuiting the outer coil first then making further adjustments to suit personal taste.

The Circuit Breaker

The circuit breaker is mounted on the combination switch as shown at Fig. 1. This unit is a protective device, which takes the place of fuses. It prevents the discharging of the battery or damage to the wiring and lamps, horn or ignition, in case any of the wires leading to these parts become grounded. As long as the lamps, horn and ignition are using the normal amount of current, the circuit breaker is not affected.

But in the event of any of the wires becoming grounded, an abnormally heavy current is conducted through the circuit breaker, thus producing magnetism which attracts the armature and opens the contacts This cuts off the flow of current, which allows the contacts to close again and the operation is repeated, causing the circuit breaker to pass an intermittent current and give forth a tapping sound.

It requires 25 amperes to start the circuit bleaker vibrating, but once vibrating a current of from five to seven amperes will cause it to continue to operate.

In case the circuit breaker vibrates repeatedly, do not attempt to increase the tension of the springs, as the vibration is an indication of a ground in the system. By operating the various switches, locate the grounded wire and eliminate it.

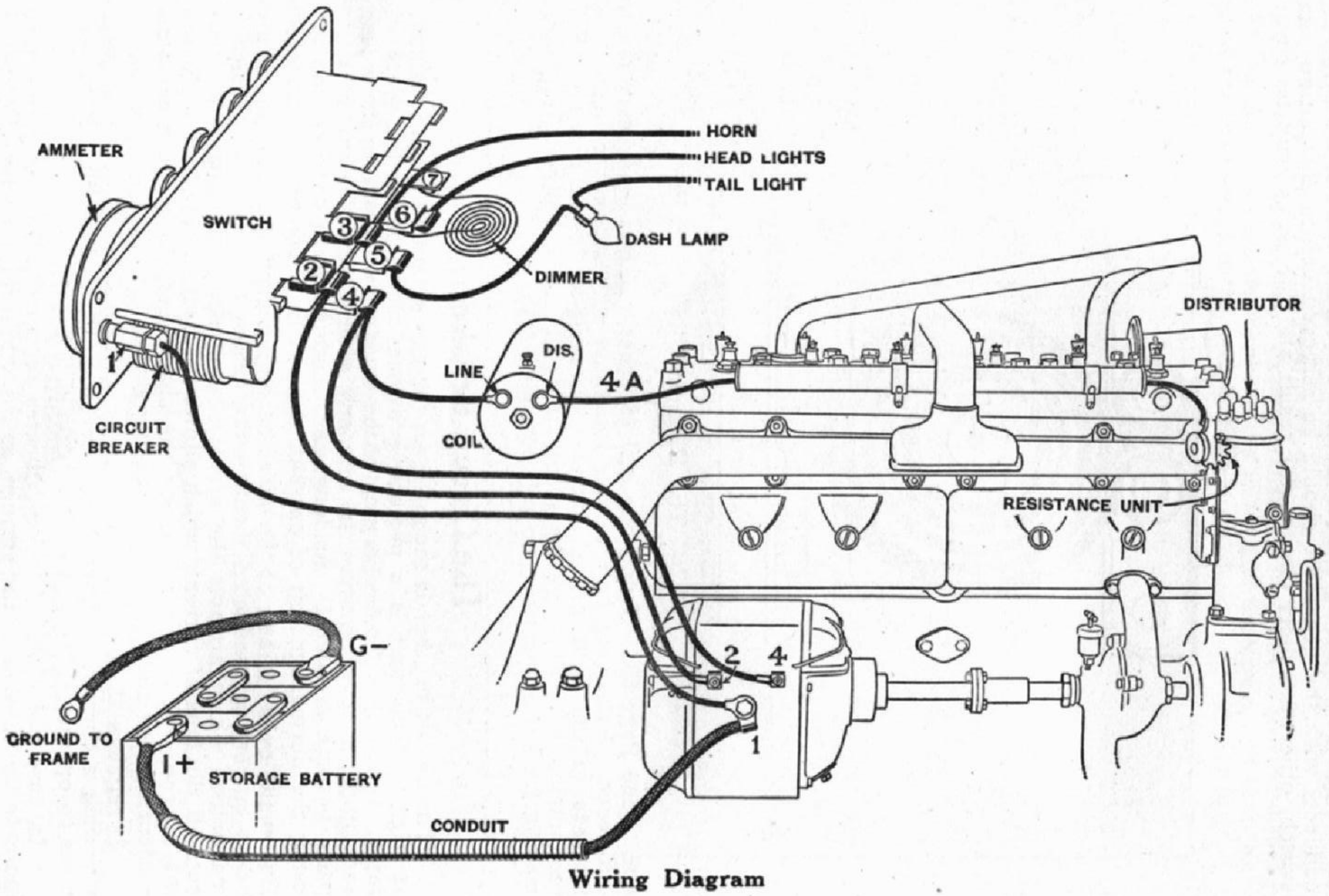

Wiring Diagram

If the circuit breaker indicates a grounded wire, the cover of the junction block on the dash should be removed and the line which is grounded should be opened at the terminal on the junction block. If the circuit breaker stops vibrating when this is done, the ground must be in the line after it leaves the junction block. If it continues to vibrate, however, the ground is in the switch or ignition circuits.

WHEN STARTING THE ENGINE NOTE PARTICULARLY THE FOLLOWING:

Do not continue to crank the engine for more than thirty seconds if it should fail to start.

Do not hold the starting pedal in after the engine has started as this will burn out the lubricant in the motor clutch, On account of the high rate of speed at which it operates, very serious damage to the armature and clutch will result if the motor clutch should become dry and stick.

Review your actions and make sure that you have followed out the instructions in regard to position of throttle, spark lever, etc., and see that there is gasoline in the tank. See Pages 15-20.

Take Care in Starting Engine

It frequently happens that you are in a very crowded street where the noise of the traffic prevents your hearing whether your engine is running or not. As a result, the starting pedal is pressed down with the intention of starting the engine, only to realize an objectionable screeching sound and a sense of having done some damage to the starting gears

It is not reasonable to suppose that an absolutely fool-proof piece of apparatus can be devised which will eliminate the possibility of this happening, and we therefore take the opportunity of cautioning all owners against being too hasty in assuming that the engine has stopped. In the winter time when the curtains are all down and much exterior noise is excluded, the danger is increased.

To safeguard against this, get into the habit of either pressing down on the foot accelerator or advancing the hand throttle so as to determine if the engine is running. Do this in every case if you are not certain that the engine is in operation, before the starting pedal is pressed down.

The Complete Starting Operation

1. Close the ignition switch and circuit between the generator and storage battery.

2. Starting gears brought into mesh.

3. Generator circuits opened at generator switch, Page 54, by movement of upper motor brush.

4. Motor circuit is closed by dropping of both brushes.

5. Engine starts and gears are released by letting up on the pedal.

6. Motor circuit is opened and generator circuit is closed again at generator switch.

When the engine is stopped or stalled do not leave the ignition button pulled out. This will discharge the battery through the generator winding.

When engaging the starter gears, it sometimes happens that the teeth do not mesh readily. Do not force the starter pedal but allow it to come back a little and try again, By this time the gears will have changed their positions so as to allow the teeth to mesh properly.

The Motor Generator

The motor generator, operating as a motor, receives its energy from the storage battery and transmits it through the motor clutch to the flywheel for cranking the engine.

The motor generator, operating as a generator, receives its energy from the engine through an extension of the pump shaft, and delivers electrical energy for the charging of the storage battery, and for operating the lights, horn and ignition.

The Motor Clutch

The motor clutch and gears, which operate between the flywheel and the armature pinion, are for the purpose of getting a suitable gear reduction between the armature and the flywheel and permit the gear in mesh with the flywheel to overrun the armature when the engine starts, and prevent the armature from being driven at an excessively high speed during the short time the gears are in mesh after the engine is running on its own power.

The Generator Clutch

The generator over-running clutch is for the purpose of allowing the armature to revolve at a higher speed than that of the pump shaft during the cranking operation; at the same time permitting the armature to be driven by the pump shaft when the engine is running on its own power.

Lubrication

There are oil holes in the front and rear end housing. (See Pages 54 and 55.) These convey oil to the ball bearings at each end of the armature shaft, and should receive four or five drops of engine oil every 300 miles.

The following are the specifications of the Hudson Super-Six Lamps:

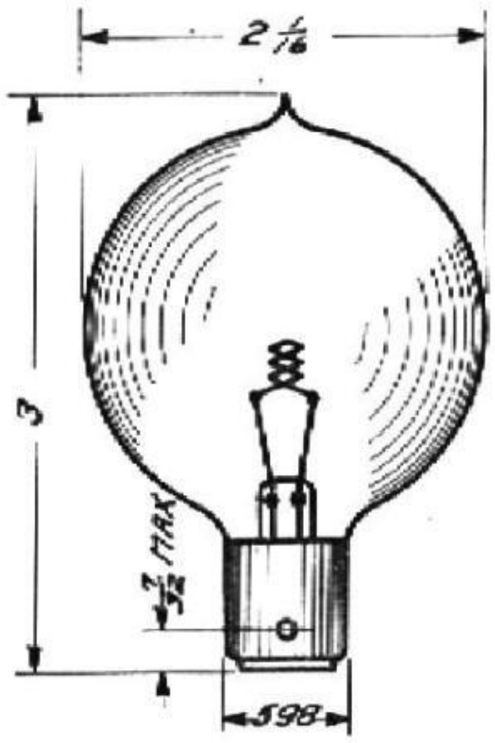

Head Lamp Bulk

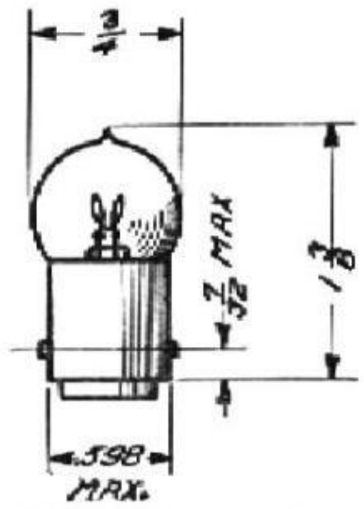

Tail and Dash Lamp Bulb

Description	Diameter of Bulb in Inches	Maximum Over All Length in Inches	Volts	Amperes	Efficiency Watts per Candle Power	Candle Power	Filament
Head Light G-16½.....	2 1/16	3⅛	7	3	1.0	15	Coil
Tail and Cowl Light G-6.....	¾	1½	3½	84	1.25	2	Loop

Single Contact—Ediswan Base (Bayonet Candelabra)

The Meaning of Conventional Characters

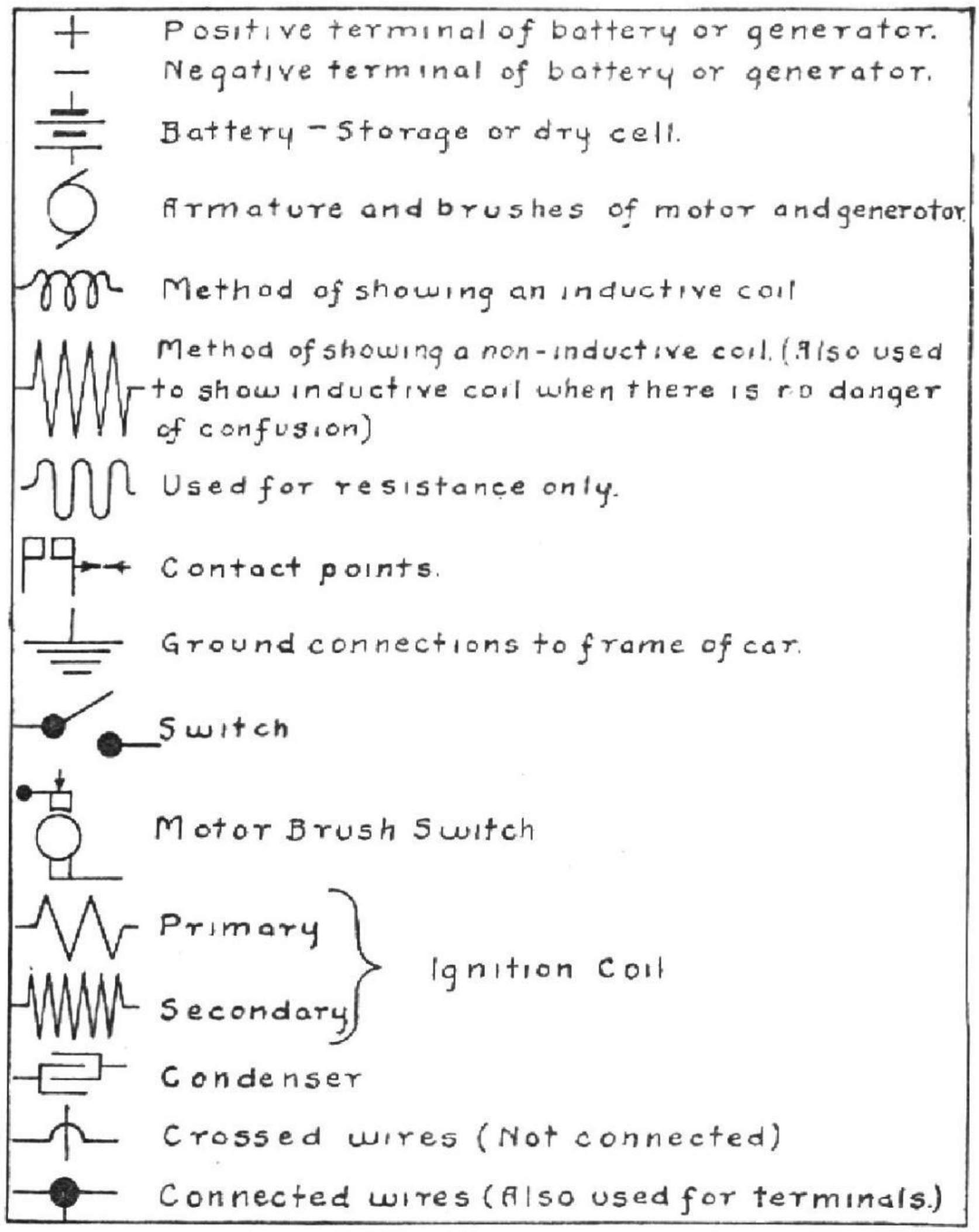

Refer to Fig. 7

INFORMATION ON STORAGE BATTERIES
Storage Battery

The 3-X-15-1 storage battery used with the Electric Cranking, Lighting and Ignition System is designed especially for it and is made by The Electric Storage Battery Co. of Philadelphia, Pa., whose products for the automobile trade are known as "Exide" batteries.

The Storage Battery consists of three cells, each cell containing fifteen (15) plates even positive and eight negative. The battery when fully charged will burn the head and tail lights approximately 12 hours.

Charging Storage Battery From An Outside Source

Battery Removed From the Car

It is necessary that the charging be done with DIRECT CURRENT. The simplest method when there is 110 or 120 volt direct current available, is to connect seven 110 volt, 32 candlepower, 100 watt carbon lamps in parallel with each other and in series with the battery to be charged this combination giving approximately the proper charging rate - 7 amperes. The positive terminal of the battery must be connected to the positive side of the charging circuit. and the negative terminal to The negative side. VERY SERIOUS INJURY TO THE BATTERY WILL RESULT IF CONNECTED IN THE REVERSE DIRECTION. The terminals of the battery are stamped "Pos." and "Neg."

To determine the polarity of the charging circuit, if a suitable voltmeter is not at hand, dip the ends of the two wires into a glass of water in which a teaspoonful of salt has been dissolved, care being taken to keep the wires at least an inch apart. When the current is turned on. fine bubbles. of gas will be given off from the NEGATIVE wire.

The diagram illustrates just how the connection should be made. The charge should be continued until all the cells have been gassing or bubbling freely for five hours, and there is no further rise in the voltage of the battery or specific gravity of the electrolyte over the same period. A battery in good condition in a discharged state will require about ten hours of recharging. If it has stood in a discharged condition for several weeks, it will require from twenty-five to fifty hours charging-all depending upon the condition of the battery and the length of time it has stood discharged.

If only alternating current is available, a current rectifier must be used. Consult your city electrician regarding this matter.

THE ELECTRIC STORAGE BATTERY CO. HAS DISTRIBUTORS WHO DO BATTERY REPAIR WORK IN TOWNS OF ANY CONSIDERABLE SIZE, AND "EXIDE BATTERY DEPOTS" IN THE FOLLOWING CITIES, WHERE REPAIR PARTS AND COMPLETE ASSEMBLED BATTERIES ARE CARRIED IN STOCK. THESE DEPOTS ARE FULLY EQUIPPED TO DO ANY KIND OF BATTERY REPAIR WORK.

Offices of the Electric Storage Battery Co.

BOSTON: 60 State Street
For Maine, New Hampshire, Vermont, Massachusetts, Rhode Island and Eastern Connecticut
NEW YORK: 100 Broadway
For New Yolk (except Northwestern New York), Western Connecticut and Northern New Jersey
PHILADELPHIA: 19th Street and Allegheny Avenue
For Eastern Pennsylvania, Southern New Jersey, Delaware and Eastern Shore (if Maryland
WASHINGTON: 1828 L Street. N. W.
For District of Columbia. Western Maryland and Virginia
PITTSBURGH: Keystone Building
For Western Pennsylvania and West Virginia
ATLANTA: Candler Building
For Tennessee, North and South Carolina, Georgia, Alabama, Mississippi, Florida and Eastern Louisiana
ROCHESTER: 44 Cortland Street
For Northwestern New York
CLEVELAND: Citizens Building
For Ohio and Kentucky
DETROIT: 208 Hayward Building, 961-971 Woodward Avenue
For Southern Michigan
CHICAGO: Marquette Building
For Illinois, Indiana, Iowa, Wisconsin, Minnesota, North and South Dakota and Northern Michigan
ST. LOUIS: H. B. Marshall, Soliciting Agent, Fullerton Building
For Missouri Nebraska, Kansas, Oklahoma Arkansas, Texas (except the Panhandle and El Paso) and Western Louisiana
DENVER: George D. Luther, Soliciting Agent, 1424 Wazee Street
For Eastern Montana, Wyoming,,, Colorado, New Mexico and the Panhandle of Texas and El Paso
SAN FRANCISCO: Pierson, Reeding & Co., 118-130 New Montgomery Street
For Northern California Nevada and Utah
LOS ANGELES: Pierson, Reeding & CO., Pacific Electric Building
For Southern California and Arizona
SEATTLE: Pierson, Reeding & CO, Colman Building
For Washington Oregon, Idaho and Western Montana
TORONTO: The Canadian General Electric Co., Ltd, King and Simcoe Streets
For Canada

"Exide" Battery Depots

Address, EXIDE BATTERY DEPOTS, INC.

BOSTON: 789 Tremont Street
NEW YORK: 527 West 23d Street
PHILADELPHIA: 19th Street and Allegheny Avenue
WASHINGTON: 1828 L Street, N. W.
ATLANTA: 20 S. Piedmont Avenue
ROCHESTER: 44 Cortland Street
CLEVELAND: 5121 Perkins Avenue
CHICAGO: 333 West 35th Street
DETROIT: Garfield and Woodward Avenues
ST. LOUIS: 2038 Walnut Street
KANSAS CITY: 1708-10 Main Street
DENVER: 1424 Wazee Street
SAN FRANCISCO: 9-13 Minna Street

Care of Battery When Car is in Storage or Laid Up for the Winter

When a car is idle or in storage for my considerable period, the. battery should not be left on the car without proper attention.

If the car is to be out of service as long as one month, but less than two, be careful to add water to the cells just before the last time the car is used and endeavor then to run the car so that the battery will be as nearly fully charged as possible. The specific gravity of the electrolyte must read between 1.275 and 1.300. Disconnect the wires of the battery, as even a slight leak in the wiring will cause the battery to discharge.

When the car is to be out of service for two months or longer the battery should be taken out and treated as follows: Remove the filling plugs and add pure water until the level reaches the bottom of the filling tube. Replace the filling plugs, turning them as far as they will go to insure their being firmly seated.

NEVER CHARGE A BATTERY WITH THE FILLING PLUGS OUT, AS THE AUTOMATIC VENTS ARE CLOSED AND FLOODING WILL RESULT.

Charge battery as instructed on page 65.

When fully charged, place the battery where it will be dry, cool and free from dust, but where it is accessible so that it will receive the proper attention. Rest the battery on wooden blocks so as to keep the bottom clear.

Once every two months give the battery a freshening charge. Always remove the filling plugs and add pure water, before starting the charge, Keep this charging up until the cells gas freely and evenly. Test the cells between charging periods to determine if they are all uniform.

The specific gravity is an indication of the state of charge of the battery, A battery discharged below a specific gravity of 1.150 will not crank the engine, nor will it burn the lights at full candlepower when the engine is not in operation.

Putting the Battery Into Service Again

Before putting the battery into service after winter storage. inspect and add distilled water, if necessary. If the battery has not been kept charged during the winter, it will be advisable to give it a fifty-hour charge at a four-ampere rate from an outside source before putting it into service again. Make sure that the terminals are free from corrosion and that good connections of the wires are made.

The corrosion, which is a greenish deposit, can be removed from the terminals by placing them in a solution of bicarbonate of soda (cooking soda) and water.

After the parts are free from corrosion they should be washed in warm water, and a light coat of heavy grease or vaseline applied but not between contacting points.

If the battery has been left on the car during the winter months, and received its periodic charges, it will not be necessary to give it ally special attention other than to fill it to the proper height with distilled water. After the car has been driven for a number of hours, read the specific gravity of the electrolyte with the hydrometer syringe. It should register from 1.275 to 1.300 if the battery is fully charged.

Hydrometer Syringe

We recommend that every Hudson owner carry One Of these useful instruments at all time s - especially if it is impossible for him to obtain regular inspection of the battery through his dealer.

This instrument is for testing the specific gravity of the electrolyte of storage batteries. it is shipped unassembled, carefully packed in a substantial wooden box.

To assemble, hold the glass barrel, to which is attached the rubber bulb, in a horizontal position, and insert the hydrometer stem end first. Wet the soft rubber plug which is attached to the hard rubber pipette (nozzle) and FORCE RUBBER PLUG, grooved end first, into the end of the glass barrel as far as it will go, or until it strikes the shoulder in the barrel. It is important not to force the pipette too much in making this attachment, as the end of the pipette must not extend beyond the base of the grooves of the rubber plug-otherwise the flow of the electrolyte will be retarded in emptying the hydrometer syringe.

Directions for Using

After removing the filling plug from the cover of the cell, compress the rubber bulb of the syringe and insert the pipette in the solution of the cell to be tested. Holding the instrument as nearly vertical as possible, gradually lessen the pressure on the bulb until the electrolyte rising in the barrel causes the hydrometer to float. In general, only enough electrolyte should be drawn to float the hydrometer free of the bottom by about one-half to three-quarters of art inch. The specific gravity reading is taken on the hydrometer at the surface of the electrolyte in the glass barrel.

If the electrolyte is below the top of the plates, or so low that enough cannot be drawn into the barrel to allow of a proper reading of the hydrometer, fill the cell to the proper level by adding pure water; then do not take a reading until the water has been thoroughly mixed with the electrolyte. This can be accomplished by running the engine for several hours.

The specific gravity of the electrolyte is an indication of the amount of charge in the battery. In a fully charged battery the specific gravity should be from 1.275 to 1.300. Gravity above 1.200 indicates battery more than half charged. Gravity below 1.200 and above 1.150 indicates battery less than half charged.

(When in this condition, use lamps sparingly until, by charging the gravity - restored to at least 1.200. Gravity below 1150 indicates battery completely discharged. An exhausted battery should be given a full charge at once.)

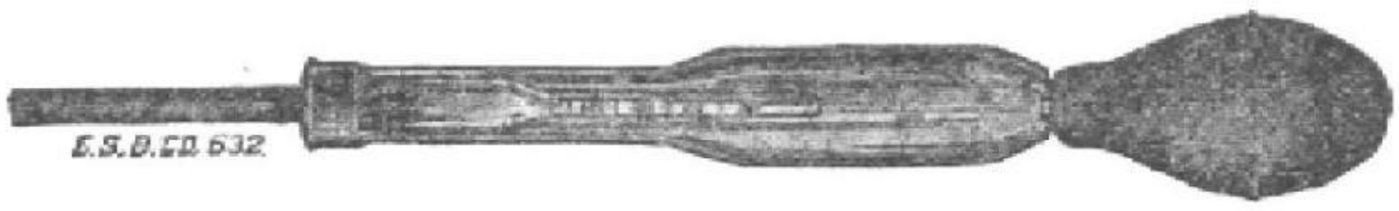

Hydrometer Syringe

Hydrometer syringes are not a part of the electric system, but can be purchased from the Hudson Motor Car Co., or from The Electric Storage Battery Co., Philadelphia, Pa.

The water for filling the batteries must be pure

Distilled Water,
Melted Artificial Ice, or
Fresh Rain Water.

Never keep the water in metal containers, such as a bucket or can. It is best to get a bottle of distilled water from your druggist, or an ice plant. A quart will last a long time. The whole point is to keep metal particles out of the batteries. Spring water, well or hydrant water from iron pipes generally contains iron and other materials in solution, which will ultimately cause trouble if used.

If electrolyte has been spilled from the cell, replace the loss with new electrolyte and follow with an overcharge by running the engine for several hours, or charge the battery from an outside source.

The specific gravity of the electrolyte to be used for replacing the loss when spilled from the cells, or due to broken jars, should be the same as that of one of the adjacent cells. This can be determined by the use of the hydrometer syringe.

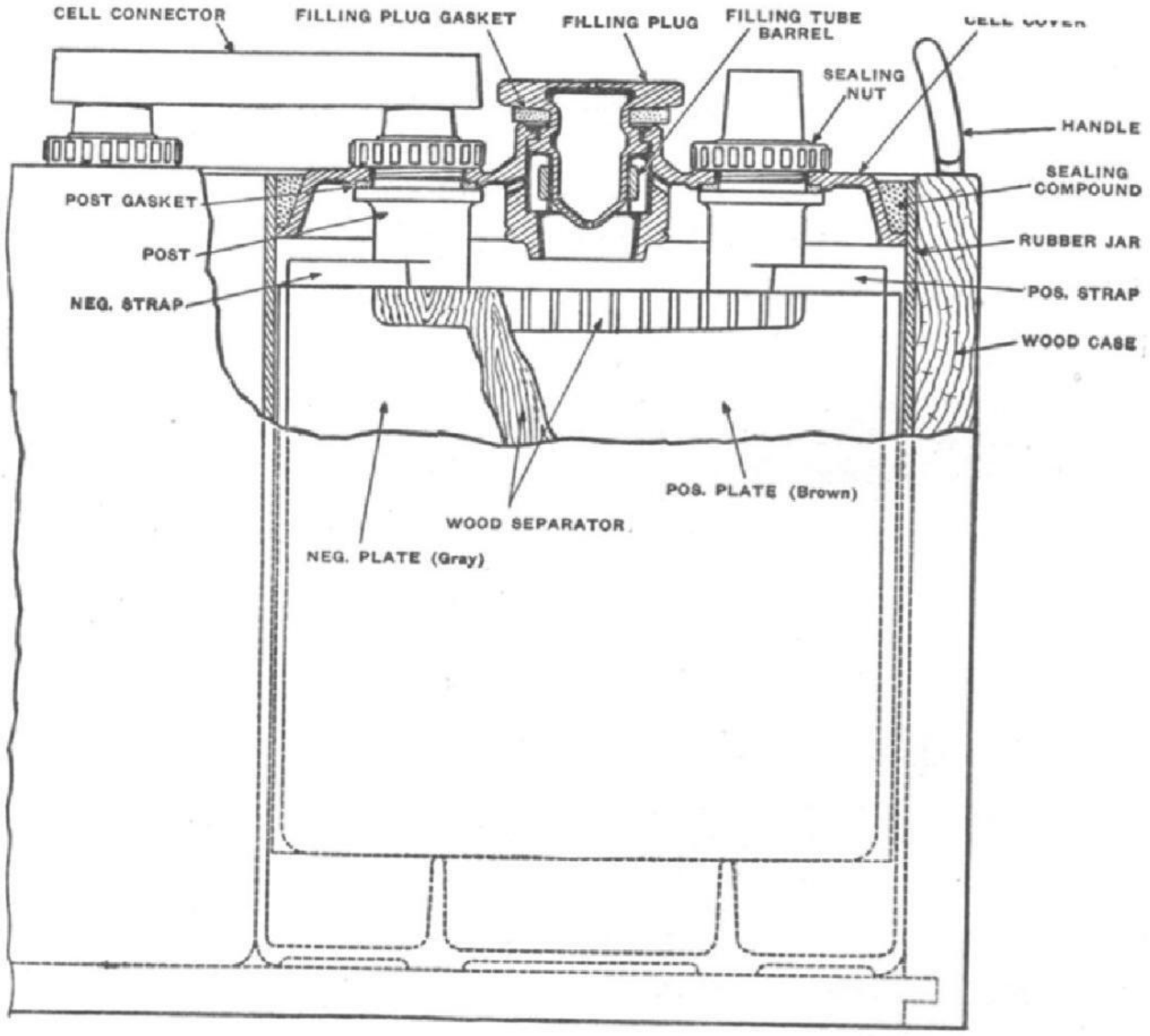

Storage Battery

When new electrolyte is required, either to replace loss from spilling or when removing sediment or replacing a broken jar, it can he made by mixing chemically pure sulphuric acid of 1.835 specific gravity, and distilled water, in proportion of two (2) parts of acid to five (5) of water, by volume.

THE ACID MUST ALWAYS BE POURED SLOWLY INTO THE WATER, AND NOT THE WATER INTO THE ACID. A glass, earthenware or other acid-proof vessel, thoroughly clean, should be used for mixing, and the electrolyte allowed to cool before using. If a lower specific gravity than 1.300 is desired, more water should be added to the acid.

STANDARD WARRANTY

FOR PASSENGER AND COMMERCIAL VEHICLES
APPROVED AS TO FORM BY

National Automobile Chamber of Commerce, Inc.

This to certify that the HUDSON MOTOR CAR, COMPANY

of DETROIT, MICHIGAN, U. S. A., ***warrant each new motor vehicle manufactured by us, whether passenger car or commercial vehicle, to be free from defects in material and workmanship under normal use and service, our obligation under this warranty being limited to making good at our factory any part or parts thereof which shall, within ninety (90) days after delivery of such vehicle to the original purchaser, be returned to us with transportation charges prepaid, and which our examination shall disclose to our satisfaction to have been thus defective; this warranty being expressly in lieu of all other warranties expressed or implied and of all other obligations or liabilities on our part, and we neither assume nor authorize any other person to assume for us any other liability in connection with the sale of our vehicles.***

This warranty shall not apply to any vehicle which shall have been repaired or altered outside of our factory in any way so as, in our judgment, to affect its stability or reliability, nor which has been subject to misuse, negligence or accident, nor to any commercial vehicle made by us which shall have been operated at a speed exceeding the factory rated speed, or loaded beyond the factory rated load capacity.

We make no warranty whatever in respect to tires, rims,, ignition apparatus, horns or other signaling devices, starting devices, generators, batteries, speedometers or other trade accessories, inasmuch as they are usually warranted separately by their respective manufacturers.

In Witness Whereof we have caused this Warranty to be signed by our duly authorized officers.

HUDSON MOTOR CAR COMPANY

R B Jackson
SEC. TREAS & GEN. MANAGER

R D Chapin
PRESIDENT

Date....., 191