STANDARD CHEVROLET 1933 ENGINEERING INFORMATION

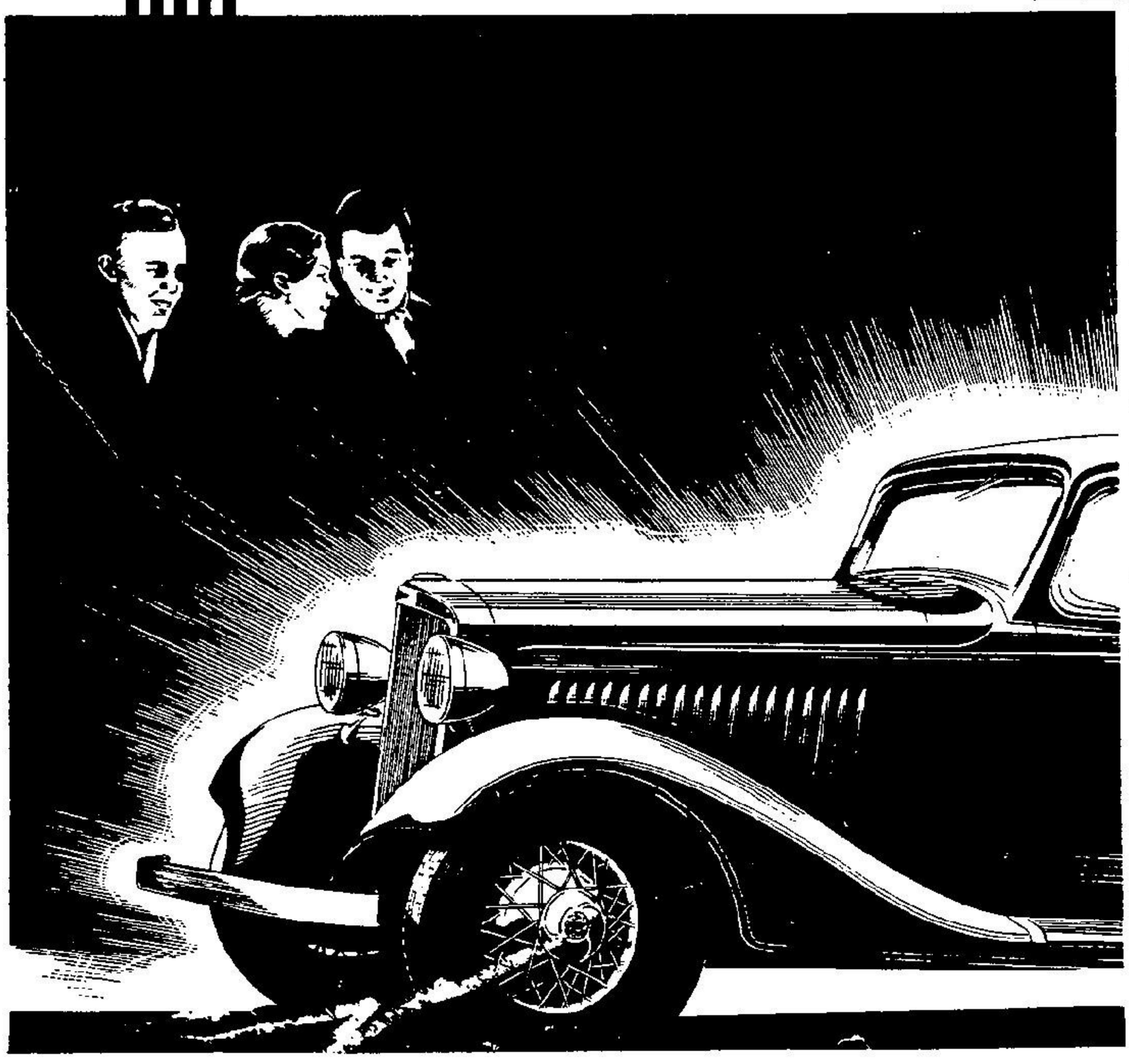

INTRODUCTION

Every year since 1910 when Chevrolet built its first car it has been forging ahead, holding first place since 1929 as the "World's Largest Builder of Six Cylinder Automobiles". All this has been accomplished by the far-sighted and untiring efforts of the whole Chevrolet organization in giving to the public an automobile that truly represents economical transportation, and "most car per dollar".

Always anticipating the desires and requirements of the day, Chevrolet is now introducing a new companion car to the 1932 Chevrolet, to be known as the 1933 Standard Chevrolet, to distinguish it from the present model, which will hereafter be known as the 1933 Master Chevrolet

This new Standard model, being a 1933 Quality Economy car, has all of the present-day major requirements with no sacrifice whatever in smart appearance, performance or quality inherent in the Master model.

To all outward appearance it is identical with the Master model except for size. Powered by a Chevrolet six cylinder, valve-in-head engine with its smooth performance and exceptional economy, this new 1933 Standard Chevrolet occupies a very enviable position in the low-priced, quality car field.

Manufacturing economy in this Standard model is gained by building the car in the same factories, by the same craftsmen, of the same materials and put thru the same assembly lines and inspection as the Master model, at the same time giving it the same high quality and durability that all Chevrolet products are noted for. Engineering and development work has been going on for nearly two years with the usual Chevrolet and General Motors unlimited facilities.

This combination of conditions and circumstances allows Chevrolet to present this 1933 Standard model to the public as a tried and proven product, having all of the well-known Chevrolet qualities - style, comfort, performance, economy, durability, service and safety.

This book describing the new 1933 Standard Chevrolet is compiled for the purpose of providing authorized persons in the Chevrolet organization with advance information concerning the new model. All information is strictly confidential and is not intended for publication.

The following pages will give: first, a brief specification of the car, followed by a general description and detailed tabulated specification of each group of parts.

The data contained herein are up-to-date as of February 1, 1933. No revisions will be made in this book to cover subsequent changes.

This book no._____ is issued to

Mr. _____

and is intended for his use only.

CHEVROLET MOTOR COMPANY

ENGINEERING DEPARTMENT

February 1, 1933

GENERAL SPECIFICATIONS

Frame:
Drop channel section with kickup, front and rear; five sturdy cross members.

Springs:
Long, chrome-vanadium, semi-elliptic type, front and rear; self-adjusting shackles; Delco-Lovejoy shock absorbers, front and rear.

Front Axle:
I beam section; reverse Elliot type; four New Departure bearings in wheels.

Rear Axle:
Semi-floating type; banjo-type,pressed steel housing; one-piece differential case; wheel flange integral with axle shaft.

Brakes:
Four-wheel service; internal-expanding type, front and rear, with cut-in parking brakes. Drums 10" diameter; linings 1 1/2" wide.

Engine:
Six cylinders; 3 5/16 bore; 3 1/2 stroke; valve-in-head type; 180.96 cubic inch displacement; three-bearing counterbalanced crankshaft.

Clutch:
Single dry plate, cushion-mounted disc with braided-moulded facings.

Transmission:
Helical constant mesh; silent second; three speeds forward and one reverse; unit power plant construction.

Universal Joint:
Yoke type; hardened steel bearings.

Fuel System:
11 gallon rear tank; A.C. fuel pump.

Steering Gear:
Semi-reversible; worm and sector type; 14 to 1 ratio.

Controls:
Lights, hand throttle and carburetor choke on instrument panel; foot-operated starter and headlight control; treadle-type accelerator.

Wheels:
Five riveted-spoke wire wheels, drop center rim, and rear carrier standard equipment.

Sheet Metal:
Aer-stream styling; deep-crowned,full skirted fenders; louvres in hood.

Electrical Equipment and Instruments:
Double filament headlamps; speedometer, ammeter, oil pressure gauge, electric gasoline gauge, ignition coil look on instrument panel; combined stop and tail lamp.

Radiator:
Sloping "V" type; painted shell; chrome bead and grille; Harrison "V Center" core.

Tools:
Necessary tools in convenient kit.

Wheel Carrier:
Neat and sturdy wheel carrier at rear.

Bodies:
Coach, Coupe and Sport Coupe bodies by Fisher;Aer-stream styling with beaver-tail back; and, no-draft ventilators.

Wheelbase:
107 inches.

Tread:
54 inches, front; 56 inches, rear.

CHASSIS

The chassis is so proportioned that on a wheelbase of 107 inches there is a surprisingly large body compartment for passenger comfort. This is accomplished by placing the engine well forward in the frame and using standard 56 inch tread at the rear. A tread of 54 inches is used at the front to give a short turning radius and ease of steering or "maneuverability".

FRAME

The frame assembly combines the general 1932 design with many of the 1933 Master construction features. It tapers uniformly from front to rear with a double kickup over front and rear axles, allowing the bodies to set low.

SIDE MEMBERS

The side members have a deep channel section with its flange widths, ribbed and panel embossing so proportioned to give a very uniformly stressed member thruout.

FRONT CROSS MEMBER

The front cross member follows the present Master Chevrolet design that has been used so successfully since the beginning of the 1932 season. It is a single steel stamping drawn into a double channel section with wide flat flanges at each edge which is securely riveted to the upper flanges of the side members, as well as to extended portions of the lower flanges of the side members. This combination makes a very satisfactory support for the sheet metal and engine at the front end.

ENGINE REAR SUPPORT

The 1932 Chevrolet three-piece engine rear support design with its double "Z" section at the center is again successfully used.

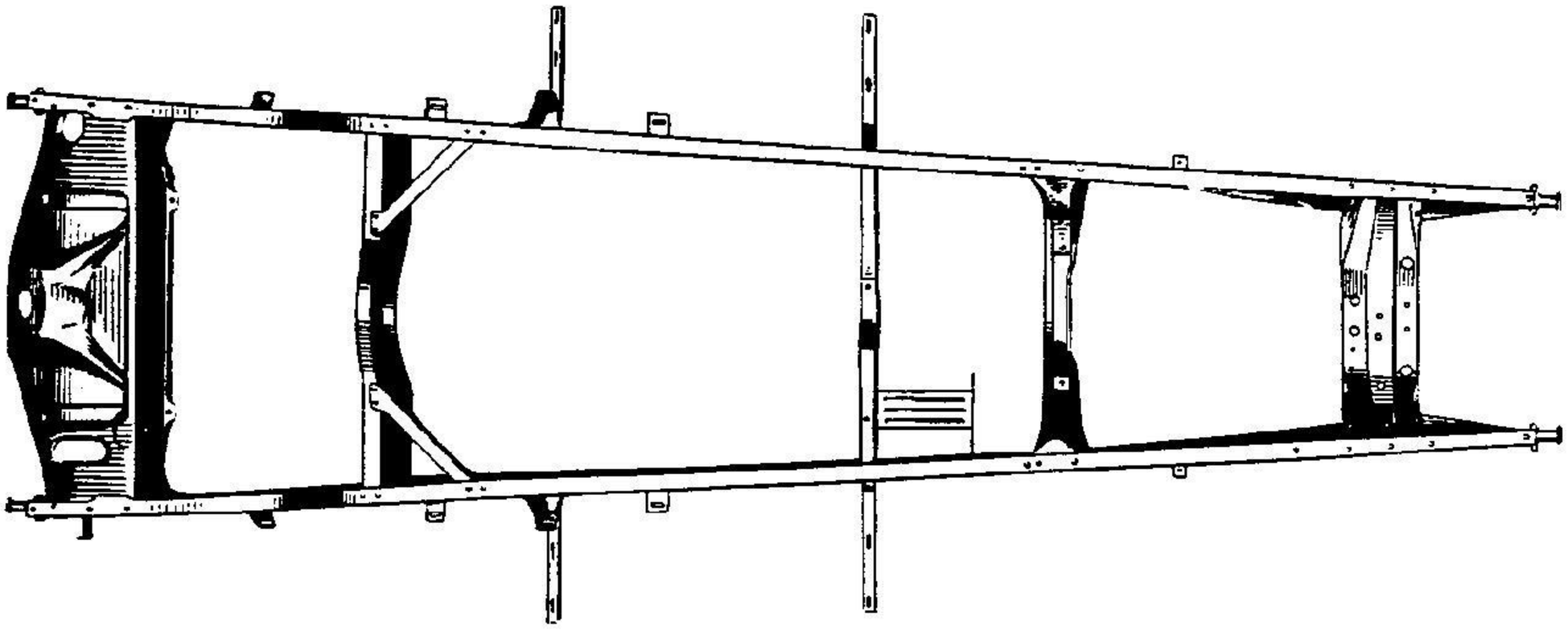

This engine rear support is one of the important structural members and gives considerable streng^h and rigidity to the frame at a point where there is considerable additional stress due to the mounting of the front end of the body.

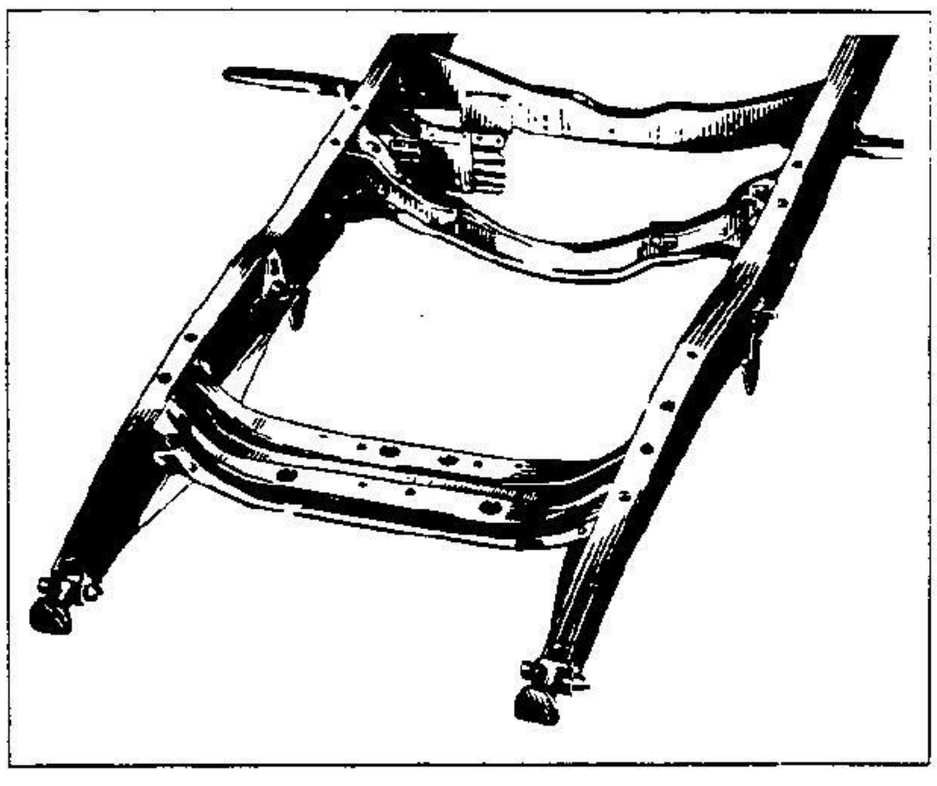

TRANSMISSION SUPPORT CROSS MEMBER

The 1932 Chevrolet design is also used for the transmission support cross member, providing a steady rest at the extreme rear end of the power plant. It also allows effective mounting and bracing of the brake cross shaft, forms an extremely rigid member on which to mount the battery hanger and relieves the transmission of torque reactions due to brake applications. In addition, there are two channel section stampings riveted to the underside of the transmission support at the ends and extending outboard under the side members, acting as running board front hangers. This combination makes a very satisfactory support and tie across the frame at this point.

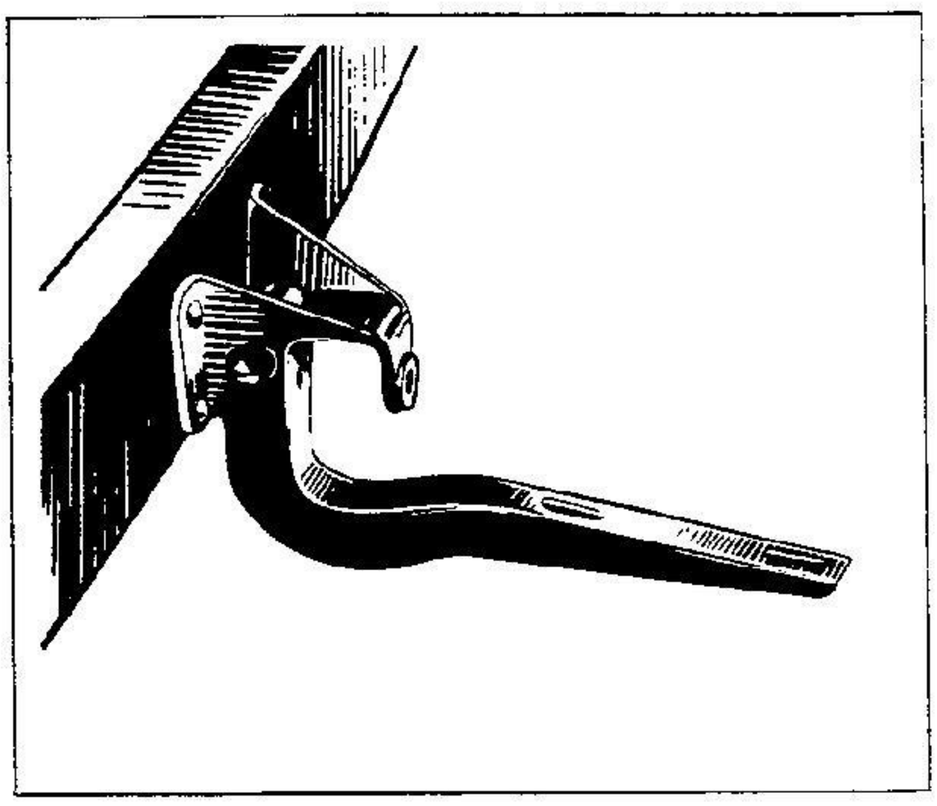

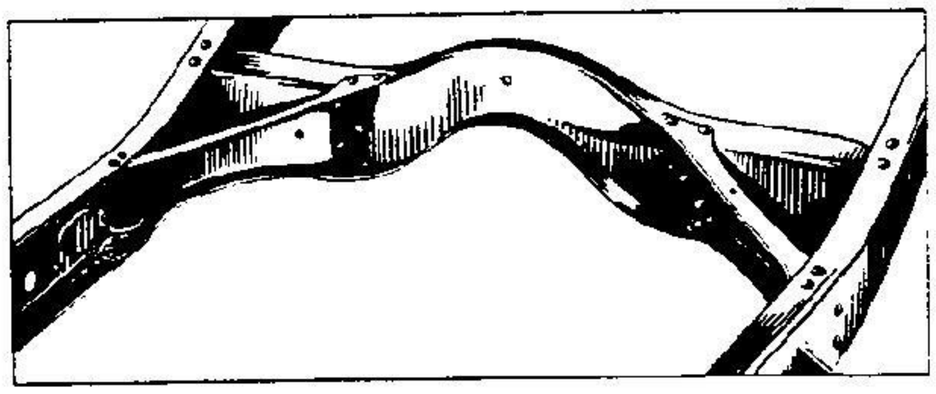

THIRD CROSS MEMBER

The third cross member is located slightly up on the forward end of the rear kickup and is formed of a "Z" section stamping. It has a kickup at its center to provide adequate clearance with the torque tube when the rear axle is up in bumper position. This third cross member is rigidly anchored by diagonal braces extending forward and downward, being riveted to the side members near the rear spring front hanger mounting.

REAR CROSS MEMBER

The 1933 Master Chevrolet design is followed in the rear cross member in that it has a raised center portion for the attachment of the wheel carrier. The gasoline tank is mounted underneath against depressed ribs in the cross member. This cross member is very rigid structurally due to the numerous stamped ribs and embossed panels.

SPRING HORNS

The spring horns, front and rear, have extended bosses and pads, tapped for bumper mounting bolts.

SPRING HANGERS

The front spring rear hanger is a steel stamping securely riveted to the side members, two rivets in the bottom flange and one in the vertical side. This hanger carries the spring eye bolt as the spring is shackled at the front.

The rear spring front hanger is a formed steel stamping combined by welding to the running board rear hanger. This combined hanger is also securely riveted to the vertical web of the side members. This brings the front end of the rear spring outboard of the frame, making the springs lay practically parallel to the centerline of the car, allowing unrestrained action of the springs in their parallel planes.

BATTERY HANGER

The battery hanger is conveniently located inside of the frame on the right hand side just forward of the transmission support cross member. This location allows a very rigid mounting and a good protection to the battery.

ENGINE MOUNTINGS

The very successful rubber mounting used on the 1932 Chevrolet, known as the "diamond" mounting is used on this Standard model. This "diamond" mounting provides four points of support on blocks of "live rubber"; two engine rear supports, one at each side of the clutch housing; one support at the front end of the engine; and, one back of the trans-

mission directly under the universal joint housing, which acts as a steady-rest for the overhung transmission weight. Quiet, smooth operation of the engine is assured by the inherent design of these rubber mountings that are scientifically developed to provide stable mounting of the engine with just enough insulation to eliminate noise and just enough directional flexibility to assure smoothness.

SPECIFICATIONS

Kickup over front axle	1 11/16	Thickness	.125
Kickup over rear axle	5 11/16	STOCK THICKNESS OF	
Taper of frame, per side	3°-38'-4"	Front Cross Member	.125
SIDE MEMBER		Engine Rear Support	.125
Depth of channel- max.	5 5/16	Transmission Support	.125
Width of top flange	1 3/4	Third Cross Member	.125
Width of bottom flange	1 3/4	Rear Cross Member	.078

EXHAUST SYSTEM

The exhaust system consists of a baffle type muffler with large exhaust and tail pipes, supported similarly to the Master model by rubber insulated brackets; the exhaust pipe having a secondary spring support at mid position. The exhaust pipe is attached to the engine manifold by the same leak-proof type of connection used in the larger model. While the exhaust pipe and muffler form a rigid unit by themselves, the mounting is resilient enough to prevent strains. The suspension of the whole muffler system likewise is similar in that the two mounting brackets on the tail pipe are insulated from the frame with rubber, preventing the transmission of exhaust noises to the frame.

SPECIFICATIONS

Muffler:		Stock thickness	.0375
Type	Baffle	Tail pipe:	
Length	20 7/16	Outside diameter	1 1/2
Diameter	5	Stock thickness	.0312
Exhaust Pipe:		Mounting	Rubber & spring
Outside diameter	2 1/16	Minimum road clearance	9 7/16

BRAKE

Both front and rear brakes are fully enclosed and are of the articulated shoe type. Their design follows closely that of the Master model. The principle difference is the size of the brake drums and width of the lining. The standard model has proportionally smaller parts which nevertheless still maintain the high safety factors for strength and efficiency.

The same "cut-in" system of linkage is used on both series of cars in which the front and rear brakes may be operated by either the foot pedal or hand brake lever by the same type of action. The system of linkage and its attachment to the brake cross shaft as well as the cross shaft itself follows the design of the Master model. All vital parts of the brakes which are exposed to the elements are protected against rust and corrosion.

SPECIFICATIONS

Brake drum diameter	10
Width of linings	1 1/2
Thickness of linings	3/16
Overall length of short linings	5 9/64
Overall length of long linings	10 7/64
Brake rod diameter	5/16
Service brake lining area per brake	22 7/8 sq.in.
Total service brake lining area	91 1/2 sq.in.
Service brake cross shaft diameter	1 1/8
Hand brake cross shaft diameter	7/8

SPRINGS

The front springs are 33 inches long with six chrome vanadium steel leaves 1 3/4 inches wide. The spring shackles are at the front end of the spring and the fixed eye at the rear. This arrangement eliminates shimmy and minimizes undesirable movements of the steering drag link.

The rear springs are 54 inches long with eight chrome vanadium steel leaves 1 3/4 inches wide.

Both the front and rear springs have leaves with rounded edges at the ends, eliminating undue wear and possible spring breakage. The long length of each spring and the combination of camber and grading give the car unusually good riding qualities.

All Alemite lubricating fittings at the spring shackles and eye bolts have been carefully considered and the fittings are designed to insure accessibility and the free passage of the lubricant.

SHACKLES

The self-adjusting spring shackles that have been so successfully used on Chevrolet cars for the past five years have been adopted for the Standard model.

The front spring is shackled at the front, the rear spring at the rear.

SHOCK ABSORBERS

Four Delco-Lovejoy shock absorbers are properly located and installed. They are of the very latest design having the actuating lever attached to the shaft by the engagement of serrations. This not only insures the fixed position of the lever, but it does so without weakening the shaft. The mounting pads are large in area where they attach to the frame, preventing localization of stresses.

The rubber bushings in the ends of the connecting links are made generously thick to provide the maximum of effective insulation and cushioning.

SPECIFICATIONS

Front Spring:	
Type	Semi-elliptic
Make	Chevrolet
Material	Chrome vanadium steel
Length	33
Width	1 3/4
Number of leaves	6
Shackle location	Front
Rear Spring:	
Type	Semi-elliptic
Make	Chevrolet
Material	Chrome vanadium steel
Length	54
Width	1 3/4
Number of leaves	8
Shackle location	Rear
Front shackle length	2
Rear shackle length	3 1/2
Shackle pin diameter	.764
Spring bolt diameter	9/16
Front spring U bolt diameter	1/2
Rear spring U bolt diameter	7/16

FRONT AXLE

The front axle is of the reverse Elliot type, with conventional one-piece drop forged "I" beam center and integral forged spring seats. It is of the same design that Chevrolet has developed and successfully used for several years. It differs from the Master model principally in size, rather than in design. Materials and workmanship are of the same high quality. The use of New Departure ball bearings for the hub and king pin thrust positions have been continued, as well as the improved ball and socket construction, in the tie rod. All parts are well provided with means for lubrication.

SPECIFICATIONS

Tread	54
I beam depth	1 7/8
I beam width	1 5/8
I beam web thickness	5/32
Distance between centers of spring pads	24 11/16
Distance from spindle center to spring pad	12 5/64
Caster angle	2°-15'
Camber	1°-30'
King pin inclination	7°-10'
King pin diameter	47/64
Steering knuckle bushing	Split bronze
Thrust Bearing:	
Type	Special ball
Number of balls	15
Diameter of balls	7/32
Inner Wheel Bearing:	
Type	New Departure
Bore diameter	1.125
Outside diameter	2.5
Width	.984
Number of balls	11
Diameter of balls	13/32
Outer Wheel Bearing:	
Type	New Departure
Bore diameter & width	.6875
Outside diameter	1.875
Number of balls	9
Diameter of balls	11/32

REAR AXLE

The rear axle follows the conventional Master design. It is of the semi-floating type with torque tube construction and driving effort taken thru the rear springs. As with

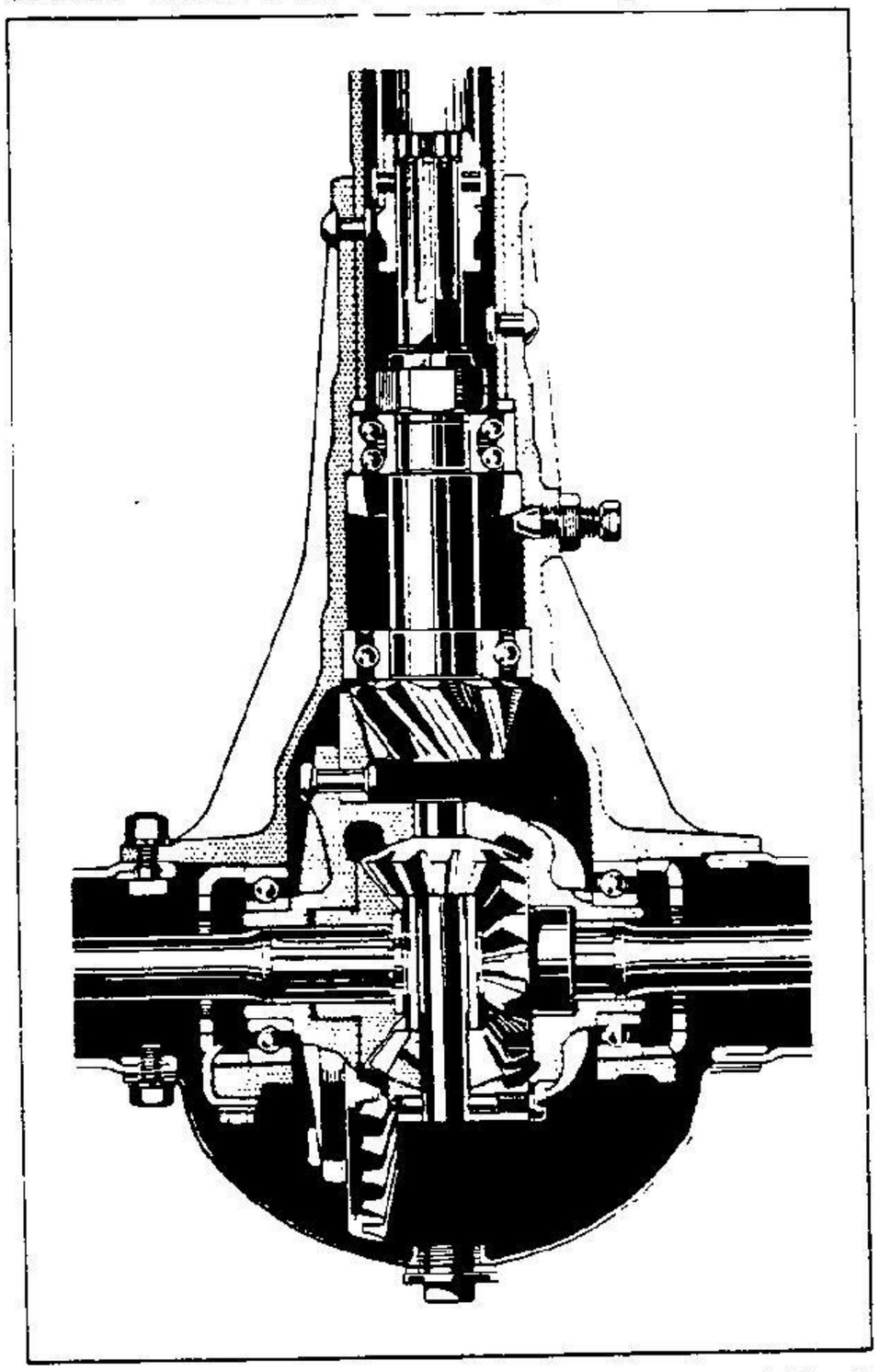

the front axle nothing has been sacrificed in making this axle proportionally smaller than the Master. The same proven constructions have been used and the axle ratio has been retained. Lubrication and oil retaining features are the same in both models.

SPECIFICATIONS

Tread	56
Distance between spring seats	41 7/8
Banjo outside diameter	10 1/4
Axle housing overall length	54 7/16
Axle housing normal thickness	.125
Brake flange diameter (O.D.)	12 1/4
	Pressed steel
Differential case	One-piece malleable
Differential case flange diameter	6 9/16
Differential pinion pitch diameter	2.037
Differential pinion bearing length	23/32
Differential gear pitch diameter	8.375
Differential carrier bolt circle diameter	5.5
Differential carrier flange diameter	9 5/8
Ring gear and pinion diametral pitch	4.416
Teeth in gear	37
Teeth in pinion	9
Gear ratio	1 : 4.11
Ring gear rivet circle	5.5
Number of ring gear rivets	10
Diameter of ring gear rivets	.3125
Length of third member- end of propellor shaft to center of axle	57 31/64
Bearings:	
Pinion shaft bearing	Double row
Front	New Departure
Bore diameter	1.102
Outside diameter	2.441
Width	.9375
Number of balls	13 per row
Diameter of balls	11/32
Rear	New Departure
Bore diameter	1.378
Outside diameter	2.834
Width	.746
Number of balls	13
Diameter of balls	13/32
Pinion adjustment	Shims and tapered collar
Pinion shaft thrust	On front bearing
Differential Bearing:	
Make	New Departure
Bore	1.614
Outside diameter	2.953
Width	.671
Number of balls	11
Diameter of balls	3/8
Axle Shaft Bearing:	
Type	Special Hyatt
Bore	1.296
Outside diameter	2.406
Width	1.000
Number of balls	14
Diameter of solid rollers	.272
Gear back lash	.006-:010
Pinion Shaft Spline:	
Outside diameter	1.000
Number of splines	10
Width	.160

Axle Shaft Spline:	
Outside diameter	1.151
Number of splines	10
Width	.180
Brake drum mounting	Riveted to integral flange on axle shaft

Axle Shaft:	
Diameter	1 7/32 max.
Length	27 1/2
Propeller Shaft	Tubular
Outside diameter	1.355
Wall thickness	.094
Overall length	47 7/64

ENGINE

Since 1929 when Chevrolet produced its first six cylinder, valve-in-head engine, constant and consistent developments have been made on the power plant, bringing it to a point where now it represents the maximum in present day efficiency. All of this experience and knowledge has made possible the design of a power plant for this Standard model that does not represent a new, but a highly developed and refined engine. This 1933 Standard Chevrolet engine is the result of balance in design and perfect coordination of all parts involved, representing Chevrolet thruout.

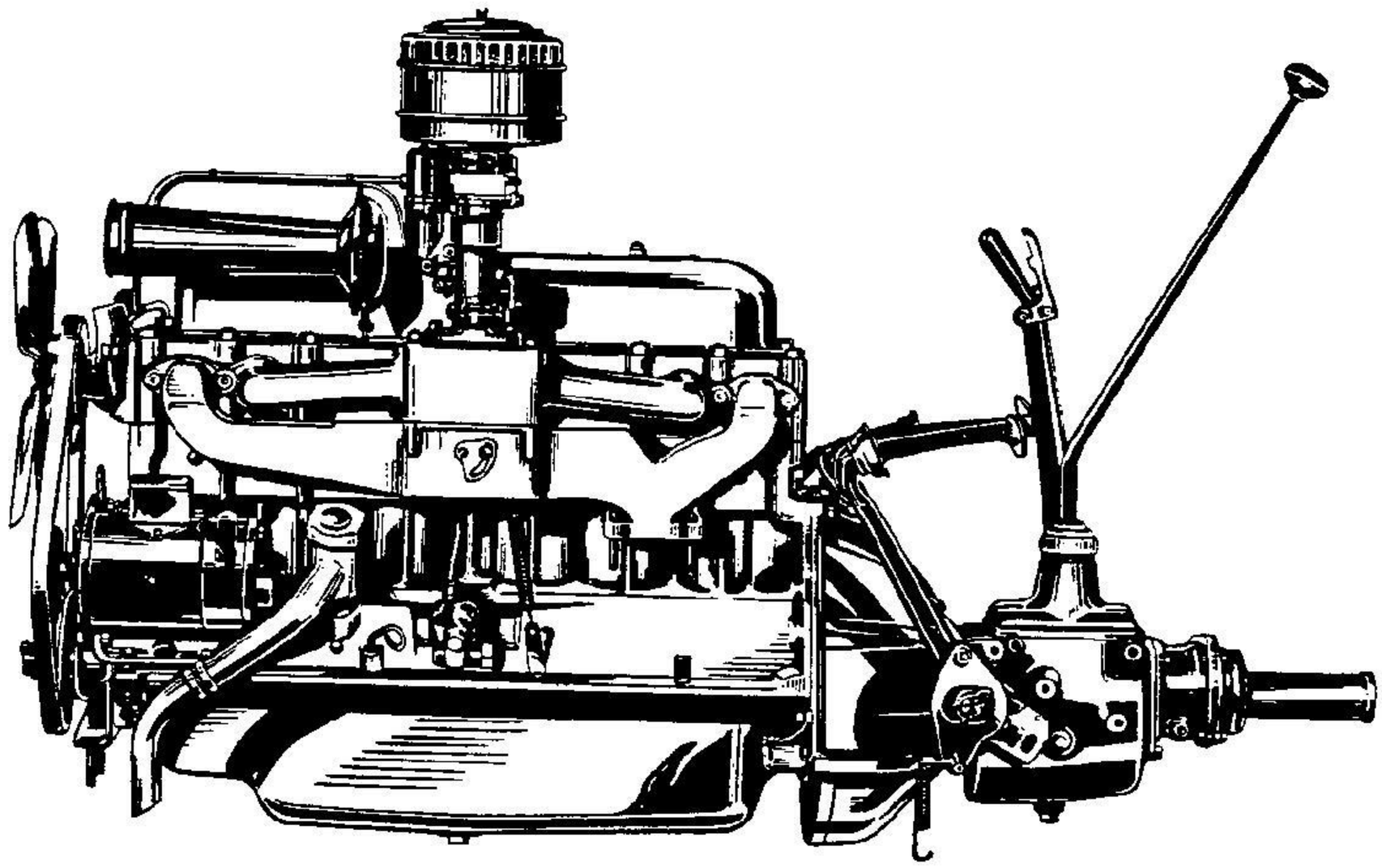

SPECIFICATIONS

Number of cylinders	6
Valve arrangement	In head
Bore	3 5/16
Stroke	3 1/2
Displacement	180.96 cu.in.
Compression ratio	5.2 : 1
Taxable horsepower	26.3
Maximum brake horsepower	60 at 3000 RPM
Maximum torque	125 ft.lbs. at 1200 to 2000 RPM
Number of points suspension	4
Crankcase oil capacity (refill)	5 qts.
Firing order	1-5-3-6-2-4

CRANKSHAFT	
Weight	57#
No.of counterweights	4 forged integrally
Crankpin diameter	2.1235
Crankpin length	1.4995
Front bearing diameter	2.0585
Front bearing length	1.256
Center bearing diameter	2.121
Center bearing length	2.124
Rear bearing diameter	2.1835
Rear bearing length	2.490
Bearing taking thrust	Center
End play of shaft	.004-.007

Main bearing material...Steel backed babbitt
Main bearing clearance ..... .001-.003
PISTON
Material ..... Cast iron, bronze bushed
Pin diameter ..... .9900
Number of compression rings 2
Width of compression rings ..... .156
Number of oil control rings 1
Width of oil control rings ..... .187
Ring material ..... Cast iron
WATER PUMP
Type ..... Impeller
Location ..... Cylinder head
CONNECTING ROD
Material ..... Drop forged carbon steel
Section ..... "I"
Length 6.531
Bearing material ..... Centrifugally cast babbitt
Clearance ..... .0005-.0015
INLET VALVE
Material ..... Extruded steel
Head diameter 1 29/64
Stem diameter ..... .325
Overall length 4.939
EXHAUST VALVE
Material ..... Extruded steel
Head diameter 1 11/32
Stem diameter ..... .325
Overall length 4.939

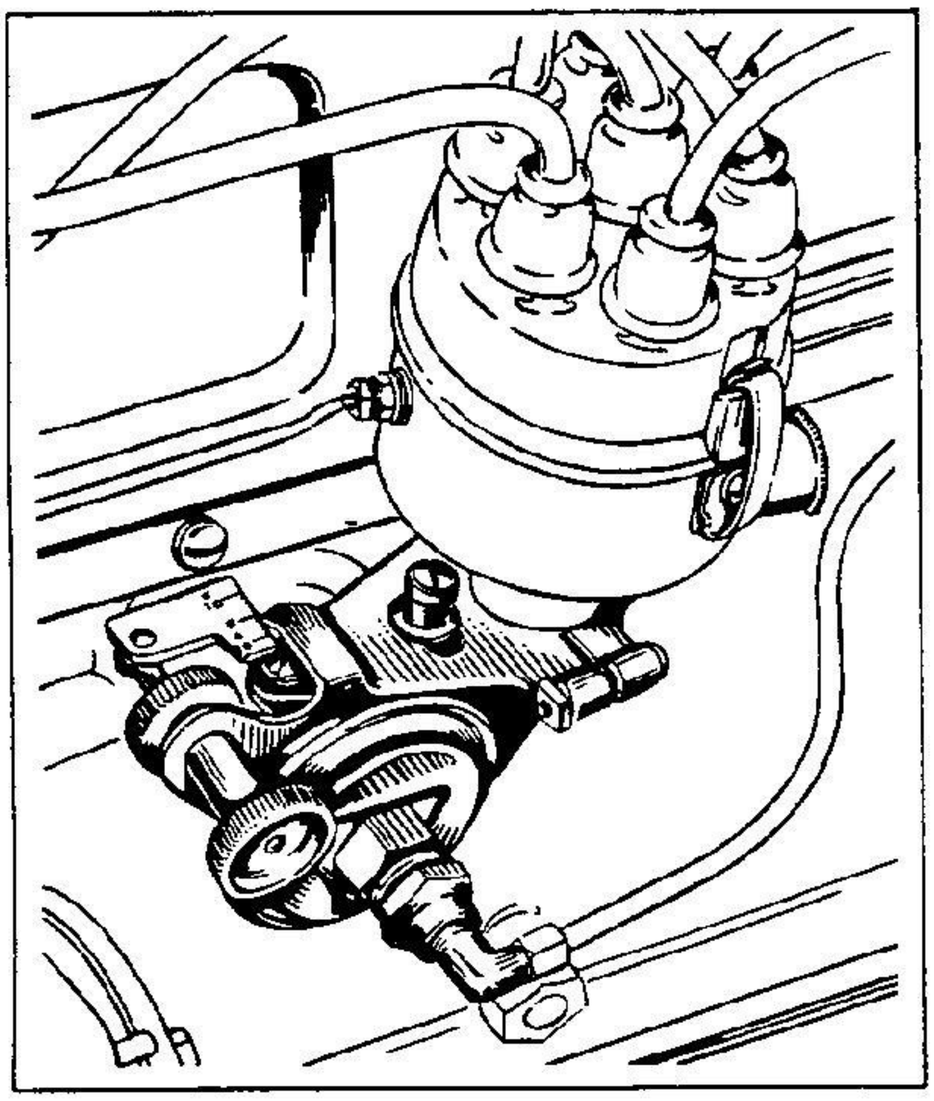

CAMSHAFT
Material ..... Drop forged steel
Number of bearings 3
Front bearing diameter 1.8085
Center bearing diameter 1.7768
Rear bearing diameter 1.621
Drive ..... Helical composition gear
Intake valve opening in relation U.D.C. ..... 4° before
Intake valve opening closes after L.D.C. ..... 34°
Valve lift .. .. .314
OIL PUMP
Type ..... Vane
Width of oil pump blade ..... .843
Average oil pump capacity (qts. per minute) 5.3
Average oil pressure ..... 14#
SPARK PLUG
Type K-9
Thread diameter ..... 14 m/m
Spark advance control ..... Centrifugal and vacuum
Max. automatic spark advance ..... 32°
Additional advance by vacuum ..... 12°
Octane Selector ..... Manual
Fan ..... 4 staggered blades
Oiling system type ..... Positive splash and semi-pressure
Valve mechanism lubrication ..... Positive feed & spray
Carburetor type ..... Down-draft
Mixture temperature control ..... Manual on manifold
Air cleaner ..... Combined with resonance type intake silencer

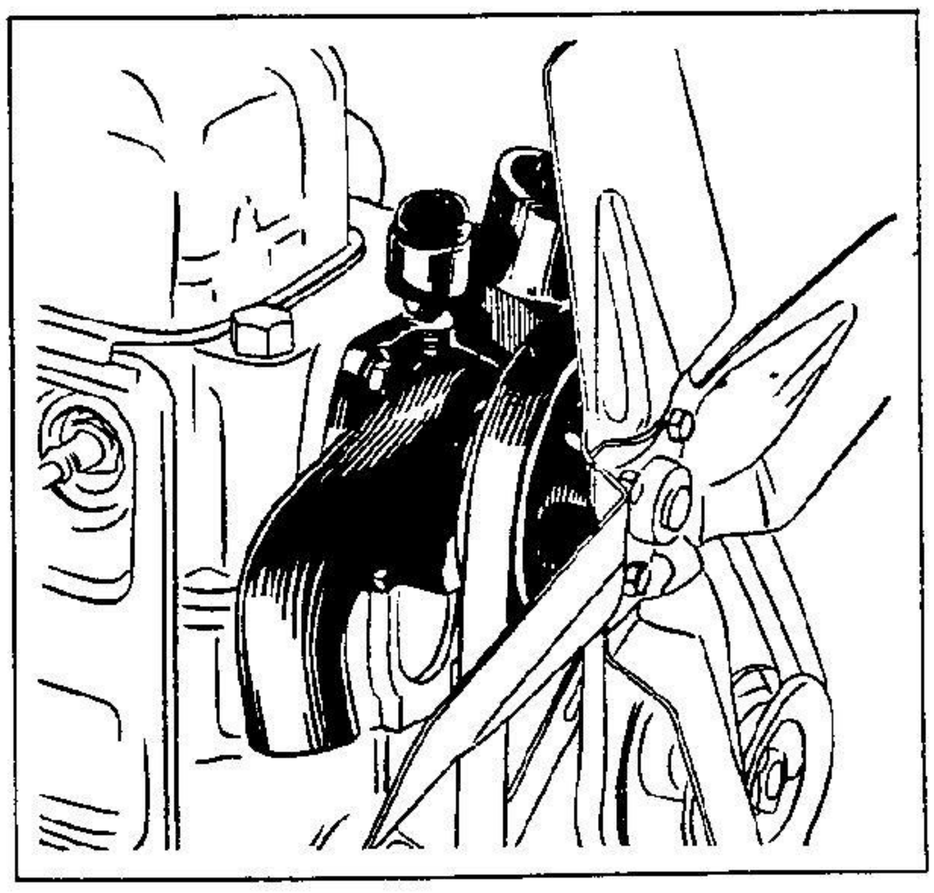

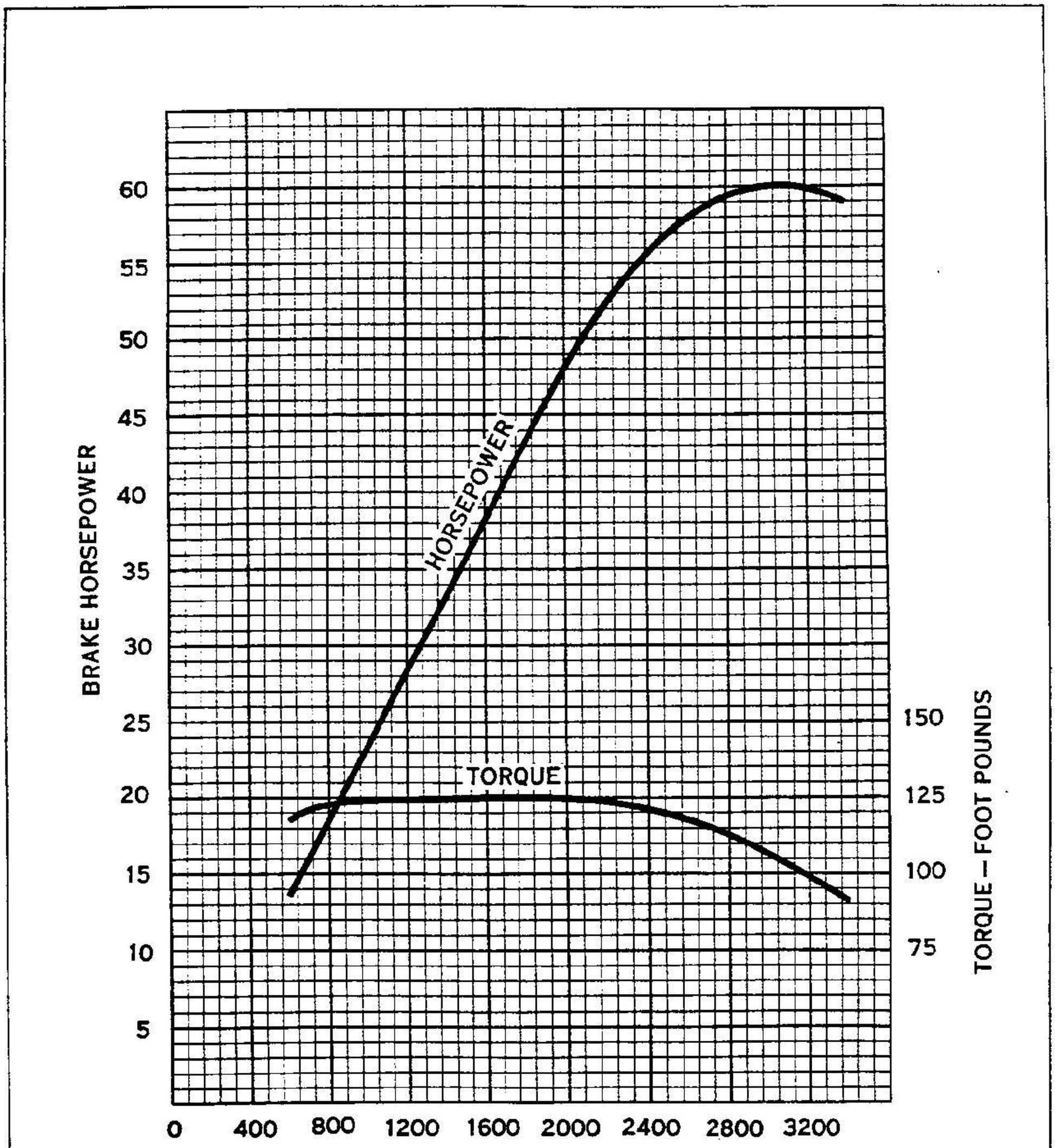

COMPARISON OF POWER AND TORQUE

CLUTCH

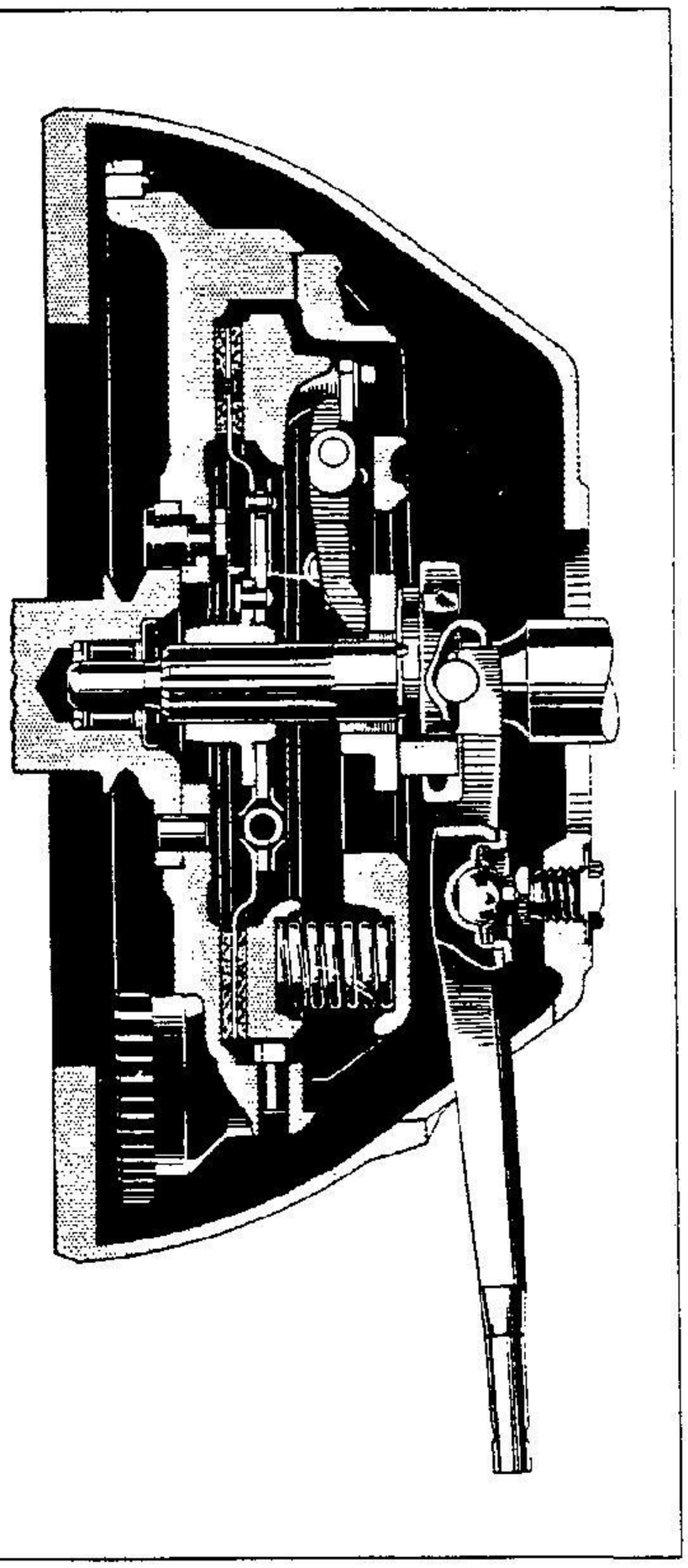

The three pressure lever style clutch follows closely the design which has been so successfully developed by Chevrolet. The clutch disc is nine inches in diameter and is cushion mounted at the hub. While it follows closely the general appearance and construction of the one used on the Master models, the necessary change in torque characteristics has been made, as well as detail changes incident to making this clutch an individual design for this model. As with all Chevrolet clutches every part is balanced dynamically within very close limits.

SPECIFICATIONS

Type	Single dry plate
Number of pressure levers	3
Number of pressure springs	9
Clutch disc diameter	9
Number of rivets	12
Clutch facing	Braided-moulded asbestos
Outside diameter	9
Inside diameter	6 1/4
Thickness	1/8
Number	2
Spring Mounted Hub:	
Number of splines	10
Diameter	1
Spline width	5/32
Hub Springs:	
Number	8
Diameter	1/2
Spring circle diameter	3 11/16
Spring load each	80-90 lbs.
Clutch fork	Stamped steel
Fulcrum seat	Spherical
Release bearing	Moulded graphite with oil reservoir
Travel to disengage	3/8

TRANSMISSION

The three speed transmission used in this model is built on sturdy lines and is characterized by large size shafts and bearings and ample width of gear faces.

The design in general arrangement follows that used in Chevrolet passenger cars in that there is a constant mesh second speed gear mounted at the rear of the main shaft next to the rear bearing. Both the rear pair of gears and the front pair of constant mesh gears have helical cut teeth for quiet operation. Helix angles are opposed to minimize all thrust forces.

Between the second speed gear and the forward clutch gear, a sliding clutch sleeve is splined to the main shaft, permitting easy engagement by means of clutch teeth into either second or high speed gears. First speed and reverse positions follow conventional sliding sequence.

Front and rear main bearings are of New Departure make and the pilot on the front of the main shaft operates in a bearing with solid rolls in the end of the clutch gear. Countershaft and reverse idler bushings are made of hard rolled bronze.

The shifting mechanism is a self-contained unit bolted to the top of the transmission case proper and independent of the cover. Its position permits of an accurate placement and a visual inspection of gear shifting positions before the case is closed.

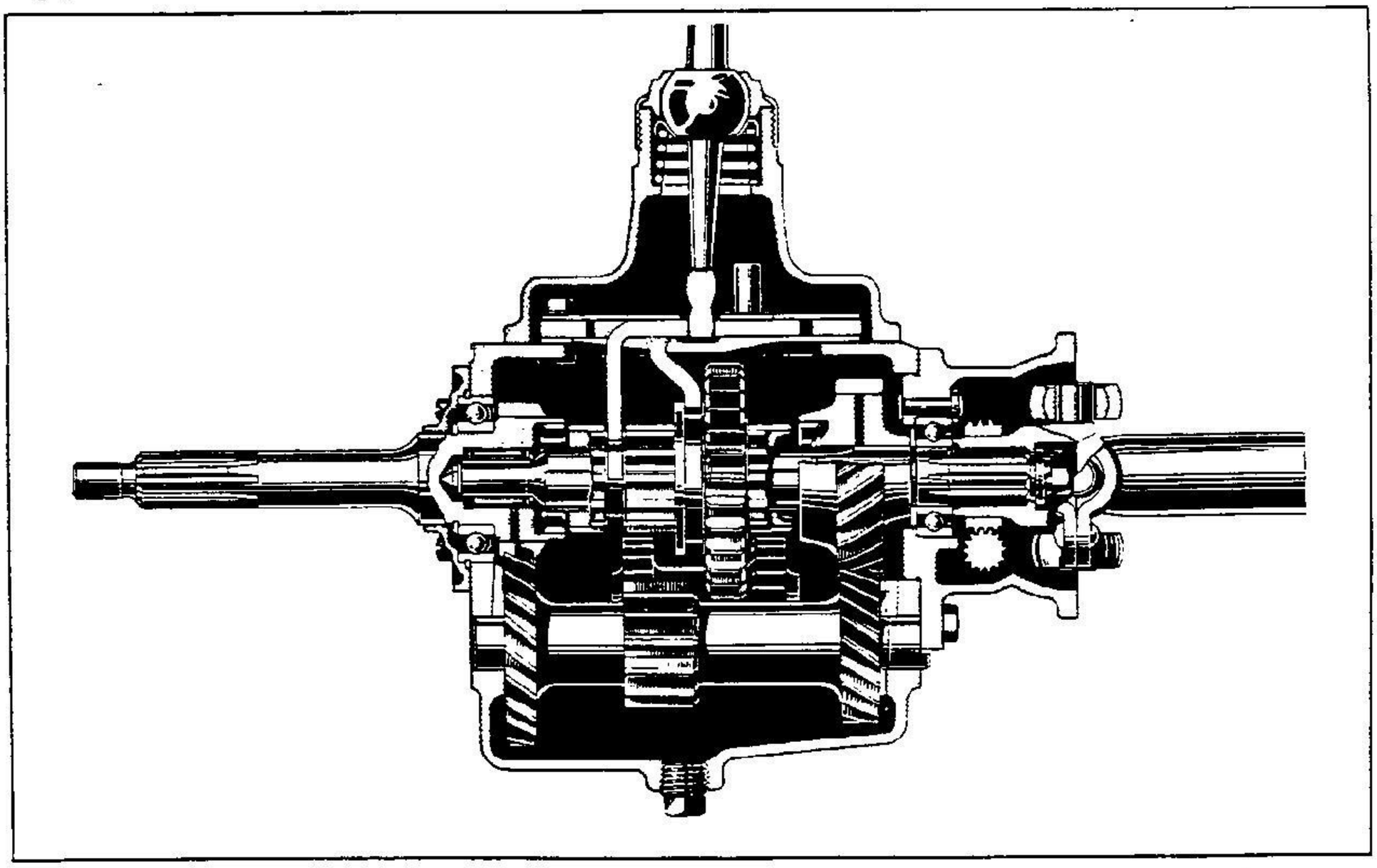

Shifter forks operate between broad flat well-lubricated surfaces and have conventional detent notches into which spring loaded balls seat when the forks are shifted to their proper position. An interlock plate insures against movement of both forks at the same time.

The gearshift lever is spring mounted on a large spherical seat and is retained by a chrome plated screw cap. The lower end of the lever is carefully machined to fit sockets in the shifter forks.

The case is filled with lubricant to the level of the filler hole which is conveniently located at the side of the transmission case. When the case is properly filled with lubricant the countershaft and gears and the idler shaft and gears are submerged. Large grooved pockets are provided in the case above and at each end of the countershaft. From these pockets, lubricant seeps thru grooves in the bearings to emerge at a vent hole in the countershaft gear between the bearings.

The pumping action of the clutch gear and countershaft driven gear conveys lubricant thru a hole in the clutch gear to lubricate the main shaft front bearing. The second speed gear is also lubricated in the same way as well as by seepage. It should be noted here that lubrication for the second speed gear is needed only when it is running without load. Under load it revolves with the main shaft as a unit. All other transmission parts are splash lubricated. By means of rotation, helical grooves in the clutch gear bearing retainer prevent the escape of the lubricant at the front end of the transmission. At the rear end, the construction permits only enough lubricant to pass to efficiently take care of the bearing, speedometer drive gears and the universal joint. All other joints are taken care of by gaskets. A drain is provided at the lowest part of the case for the periodic changing of the lubricant.

SPECIFICATIONS

Type	Helical constant mesh - silent second, three speeds forward, and one reverse
First speed ratio	2.502 : 1
Second speed ratio	1.708 : 1
High speed ratio	Direct
Reverse ratio	2.502 : 1
Shift type	Stamped plate in case
Shifter yokes	Stamped
Countershaft construction	One piece
Main Shaft:	
Number of splines	6
Diameter of splines	1 5/32
Width of splines	1/4
Second and Third Speed Clutch:	
Type	7 pitch tooth form modified
Number of splines	12
Diameter of splines	1 27/32
Countershaft diameter	7/8
Reverse shaft diameter	7/8
Main Shaft Front Bearing:	
Type	New Departure
Outside diameter	2.8346
Inside diameter	1.5748
Width	.6299
No. and diameter of balls	11 - 3/8
Main Shaft Rear Bearing:	
Type	New Departure
Outside diameter	2.0472
Inside diameter	.9843
Width	.5906
No.and diameter of balls	11 - 11/32
Main Shaft Pilot Bearing:	
Type	Hyatt
Outside diameter	1
Inside diameter	11/16
Length	1
No.and diameter of rollers	12 - 5/32
Countershaft front bushing	7/8 x 1 1/4
Countershaft rear bushing	7/8 x 1 3/8
Reverse shaft bushings	7/8 x 1

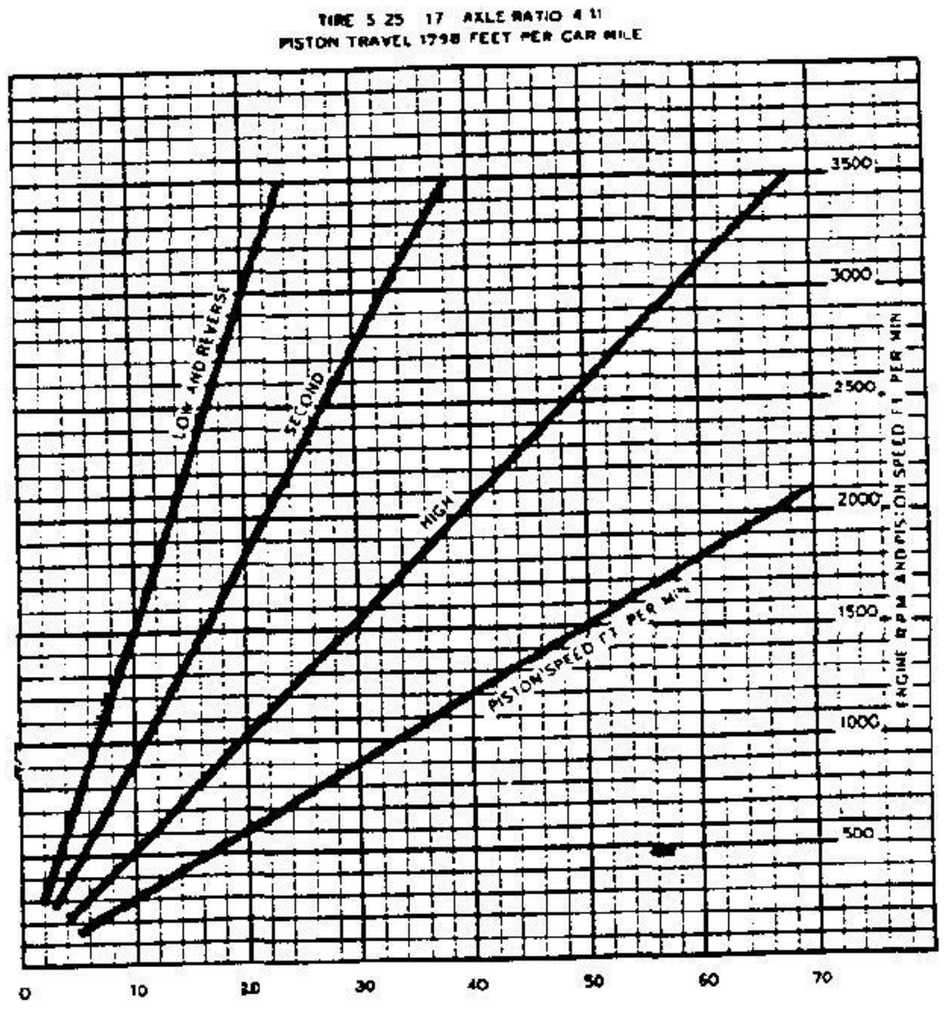

UNIVERSAL JOINT

The universal joint is assembled as a unit to the transmission and is removable as a unit like the Master model. It follows the same design that Chevrolet has developed and used so successfully in previous models. The attachment to the transmission shaft and to the propellor shaft is by splined fittings. Lubrication comes to the joint as part of the transmission case system.

SPECIFICATIONS

Type	Yoke
Transmission Coupling:	
Diameter	31/32
Splines- No.and width	10 - 5/32
Bearing length	3/4
Propellor Shaft Coupling:	
Diameter	1
Splines- No.and width	10 - 5/32
Bearings	Hardened steel
Yoke pin diameter	11/16

FUEL SYSTEM

The gasoline tank occupies the usual place at the rear of the chassis and is broad and shallow to conform to the rear cross member and maintain road clearance. The long filler flange extends outward beyond the space required for a trunk rack and lies close to the cover over the rear cross member. It is thus very accessible and its shape permits filling the tank to capacity without air locks. The tank is held in place with straps with a "T" bolt construction at the ends which permits natural alignment and relieves both the strap and bolt of undue strains.

The electric gasoline gauge float mechanism occupies the usual place in the gasoline tank and the indicating dial is located on the instrument panel. This gives a reliable and flickerless reading.

The gasoline feed pipe is carried, in the customary way, on the outside of the frame until it turns in to the fuel pump. The pipe is held in position by a number of well placed clips. The same fuel pump is used as on the Master model and is of the well-known A.C. make, having had several successful seasons' use on other models.

SPECIFICATIONS

Fuel tank capacity	11 gallons
Fuel tank length	33 1/2
Fuel tank width	12
Fuel tank depth	7 13/16
Fuel pump	A.C. with air dome
Fuel tank mounting	"T" bolt and strap
Gasoline feed pipe	Copper tubing
Gasoline feed pipe diameter	1/4

STEERING

The steering gear follows the same design and incorporates the same high grade material and workmanship as used on the Master model, including the mast jacket construction, steering wheel and the method of supporting the mast at the dash panel.

The steering connecting rod joining the pitman arm with the arm on the front axle follows the same construction as the tie rod used on the front axle.

SPECIFICATIONS

Type	Worm and sector
Ratio	14 : 1
Steering post diameter	1 5/16
Steering shaft diameter	5/8
Steering wheel diameter	16
Number of spokes	3
Worm bearings	Combined radial and thrust - taper roller
Steering wheel turns locked to locked positions of wheels	3.13
Type of steering	Fore and aft
Steering gear mast jacket bushing	5/8 I.D.x1 1/8 long
Steering gear cross shaft bushing- (2 required)	7/8 I.D.x7/8 long
Minimum turning diameter	37 feet

CONTROLS

The operating controls also follow the general design used on the Master model, being held in rubber grommets on the forward side of the dash.

The accelerator and hand control linkage are interconnected by means of a loose lever.

The accelerator foot control is the same type of hinged pedal, giving the driver the maximum of driving comfort.

The starter control is the conventional foot-operated type, the same as used on the 1932 Chevrolet.

Hand throttle	Wire in conduit	Spark	Vacuum - automatic
Carburetor choke	Wire in conduit	Manifold heat	Manual adjustment on manifold
Accelerator	Treadle type, hinged pedal	Starter	Foot-operated pedal

WHEELS

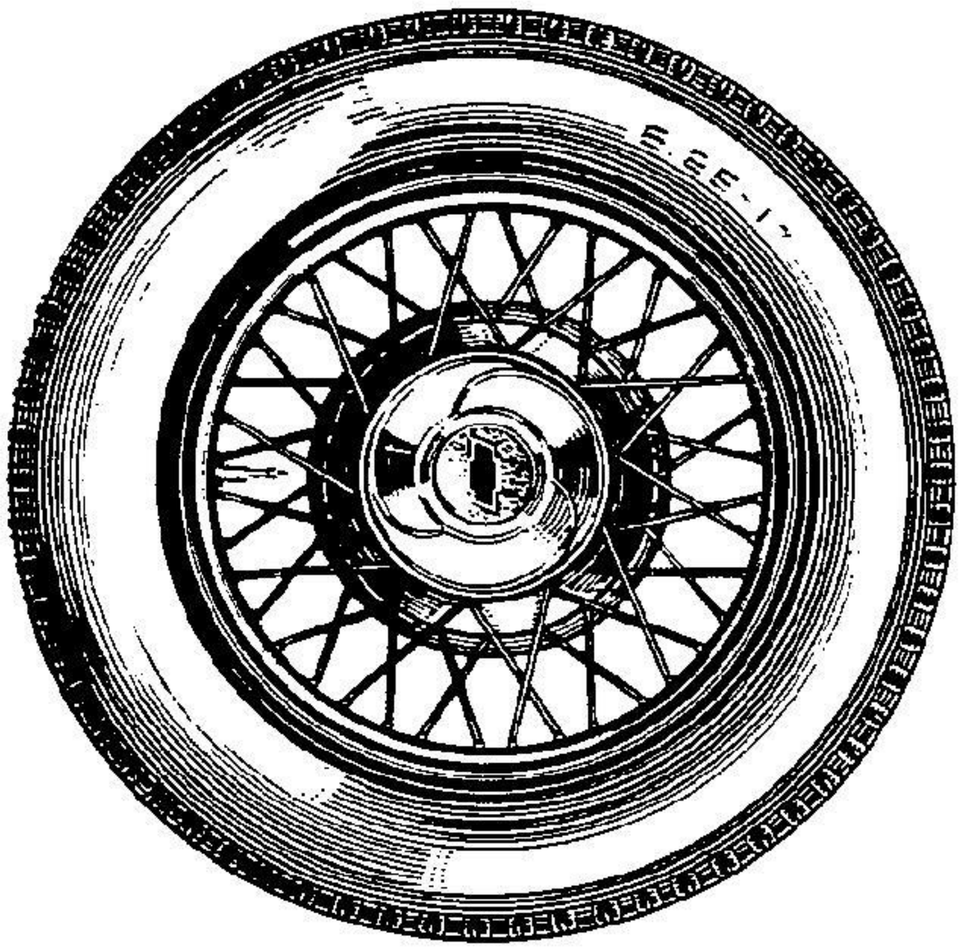

Chevrolet's beautiful and sturdy wire wheel design with its forty riveted spokes to a permanent drop center rim and a large diameter hub of the concealed bolt type is used on this Standard model.
The wheel carries a generous-sized 5.25 x 17 balloon tire which is perfectly proportioned to balance the rest of the car, both as to appearance and loading.

SPECIFICATIONS

Rim:	
Type	Drop center
Diameter	17
Width	3
Gauge	.135
Spokes:	
Fastening	Riveted
Number	40
Diameter	.220
Hub:	
Type	Internal flange
Diameter, inboard	9 3/4
Diameter, outboard	6 5/16
Length	4 11/32
Diameter of bolt circle	4 1/4
Number of bolts	5
Diameter of bolts	7/16
Cap type	Large disc
Cap diameter	6
Tire:	
Size	5.25 x 17
Number of plies	4
Valve stem type	Straight
Rolling radius	13.16
Revolutions per mile	750
Wire wheel weight (less cap)	20.06
Wire wheel weight (with cap)	41.78
(Complete with tire and tube)	

SHEET METAL

The sheet metal making up the appearance for this new 1933 Standard Chevrolet is identical in design to the beautiful, pleasing lines of the present 1933 Master Chevrolet. This includes the successful center-point mounting of the sheet metal at the front of the car which has proved so effective and is known as the stabilized fender mounting.
Both front and rear fenders have deep crowns and the side flange snugly follows the tire outline, hiding the springs, steering connections and the underside of the fenders. The neat, graceful lines on the running boards are obtained by the front fender curvature being carried down into the front end of each running board, presenting a long, graceful sweep and avoiding the appearance of a sharp

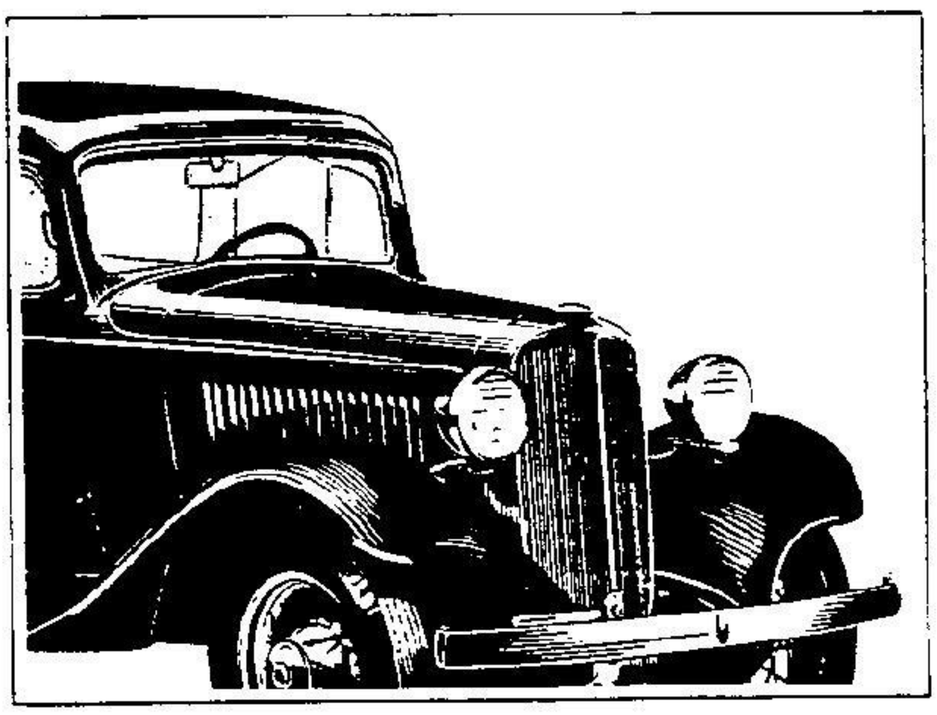

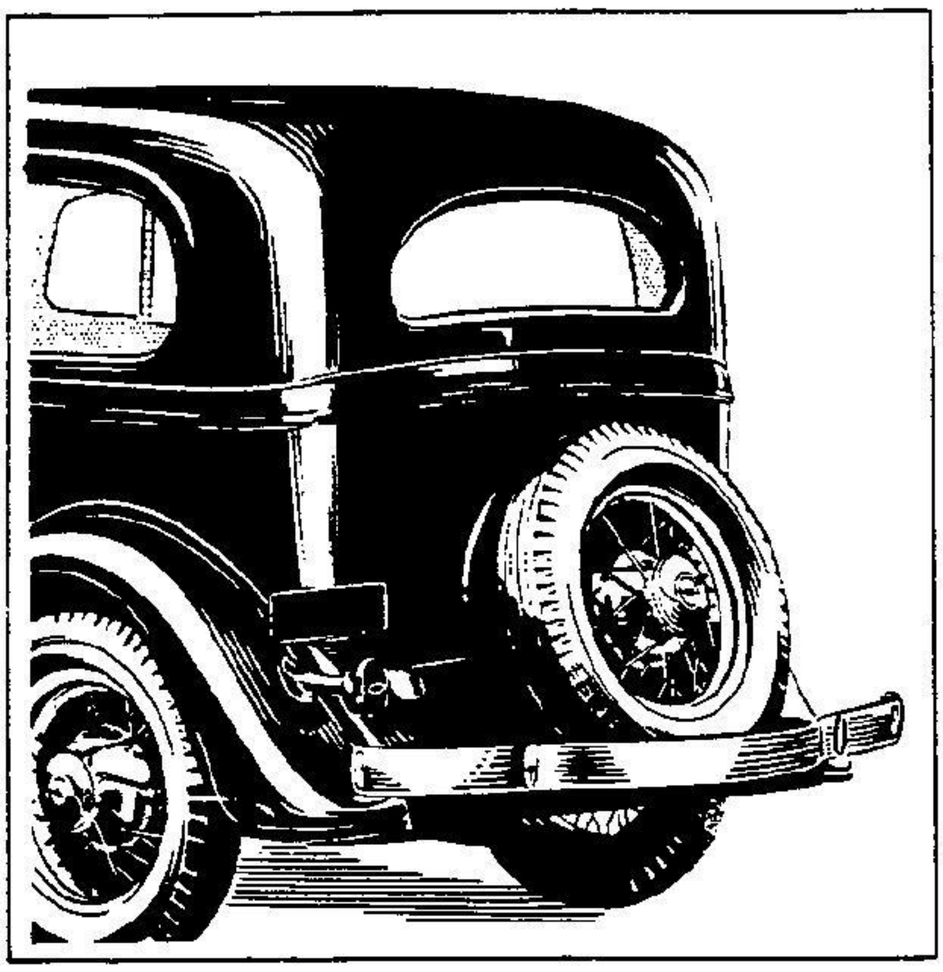

break at the end of the fender.
The 1933 style is also incorporated in the rear deck cover which forms a continuation of the rear body panel, completing its graceful downward sweep and blending smoothly into the fender contours at the sides.
Eighteen well-proportioned louvres are in each hood side panel and the hood is fastened down by an internal catch.
The same license tag bracket is used, being attached to the right front spring horn by the bumper bolt.

SPECIFICATIONS

Running board mat	Steel-backed rubber
Stock Thicknesses:	
Running board base	.038
Front fender	.031
Rear fender	.031
Hood top panel	.038
Hood side panel	.038
Rear cross member cover	.031
Radiator splash guard	.031

ELECTRICAL EQUIPMENT AND INSTRUMENTS

The headlamp design, finish and method of mounting follow closely that used on the Master model. This is true also of the tail lamp and its support bracket and the method of illuminating the license tag.
The stop lamp derives its current from the ignition circuit and has the same fuse protection.
A popular high frequency vibrator type of horn is used, being mounted under the hood on the manifolds.
The Master lock type coil for ignition is used as well as the foot-operated dimmer switch located on left side of the floor board.
Similar in general design to the Master Chevrolet, the instrument panel is finished in a distinctive and dignified manner. The instruments register by moving pointers. Dials are black with white graduations, figures and pointers. Dial rims or bezels are chrome plated and the crystals are slightly spherical for good visibility of dials. One bulb on the underside of panel lights all the instrument dials.
The speedometer is located at the left of the panel with the combined oil and gasoline gauge at the right and the ammeter in the center at the top. The choke button is located above and between the speedometer and the ammeter. The throttle control button is located at the right of the ammeter while the lighting switch is located in the lower left hand corner of the panel. At a similar point on the right side, a dummy button is provided for the installation of any electrical

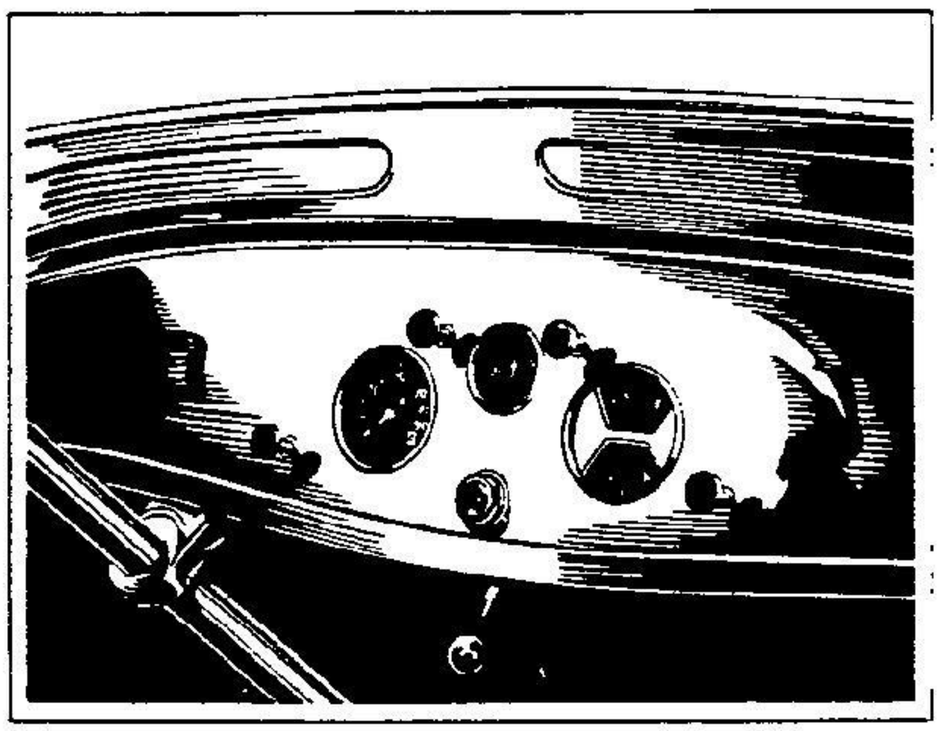

accessory that may be desired. The lock for the coil is carried at the bottom of the panel in the center.

SPECIFICATIONS

Headlamp:	
Type	Two beam (parabolic reflector)
Outside diameter	9 1/8
Length	7 5/8

Lens type ..... Convex "Twilite"
Lens diameter 8 11/32
Prism location ..... Internal
Bulb type ..... Double filament
Bulb candlepower 21-21
Stop Lamp:
Type ..... Combination
Lens ..... Reflex glass
Switch location ..... On pedal stop
Switch operation ..... From brake pedal
Tail lamp bulb candlepower 3
Stop lamp bulb candlepower 3
Horn:
Type ..... Trumpet-vibrator
Location ..... Under hood
Battery:
Make ..... Delco
Number of plates 13
Volts 6
Ampere hour capacity 90
Ammeter:
Make ..... A.C.
Range ..... 20 ampere charge and discharge
Gasoline and Oil Gauge Unit:
Make ..... A.C.
Indicator ..... Hand
Oil gauge range 0-30

Ignition Coil,Switch & Cable Assembly:
Type ..... Combination
Make ..... Delco
Speedometer:
Make ..... A.C.
Range 0-100
Indicator ..... Hand
Starting Motor:
Model 714-L
Drive type ..... Bendix
Rotation (commutator end) ..... C.C.W.
Bearing (commutator end) ..... Cast iron
Bearing (drive end)..... Graphite bushing
Bendix pinion ..... Meshes on flywheel
No.of pinion teeth 10
No.of flywheel teeth 104
Ratio ..... 10.4 : 1
Generator:
Model 943-J
Rated voltage 8.2
Voltage regulation ..... Third brush
Max.charging rate-hot 12
Max.charging rate-cold 17
Rotation (drive end) ..... C.W.
Bearing (commutator end)..... Bronze bushing
Bearing (drive end) ..... Ball bearing
Generator pulley ..... "V" type-Cast iron
Angle ov "V" ..... 28°

RADIATOR

The radiator follows the 1933 Master Chevrolet in design, appearance and construction, differing only in proportion, to match the rest of the car. It is of the popular sloping "V" type, having the shell painted the same color as the body with a contrast of chromium plated bead and grille in a very effective manner. The core is of the very latest type of construction, assuring a very high thermal efficiency.

SPECIFICATIONS

Shell material ..... Steel
Shell thickness ..... .038
Radiator Core:
Type ..... Ribbed cellular
Material ..... Brass

Exposed area ..... 305 sq.in.
Depth 2 1/8
Capacity ..... 3 qts.
Total capacity of system - gallons 2 1/2

TOOLS

The necessary equipment of tools are furnished, the same as with the Master model.

WHEEL CARRIER

The carrier for the spare wheel and tire on the rear follows the same construction used on the Master model, having a wide base, sturdy construction and same type of reinforcing for the rear cross member where the carrier attaches.

The wheel and tire are carried at an angle that harmonizes with the lines of the body. Due to its smooth surfaces and simple construction, the carrier is very easily cleaned.

BODIES

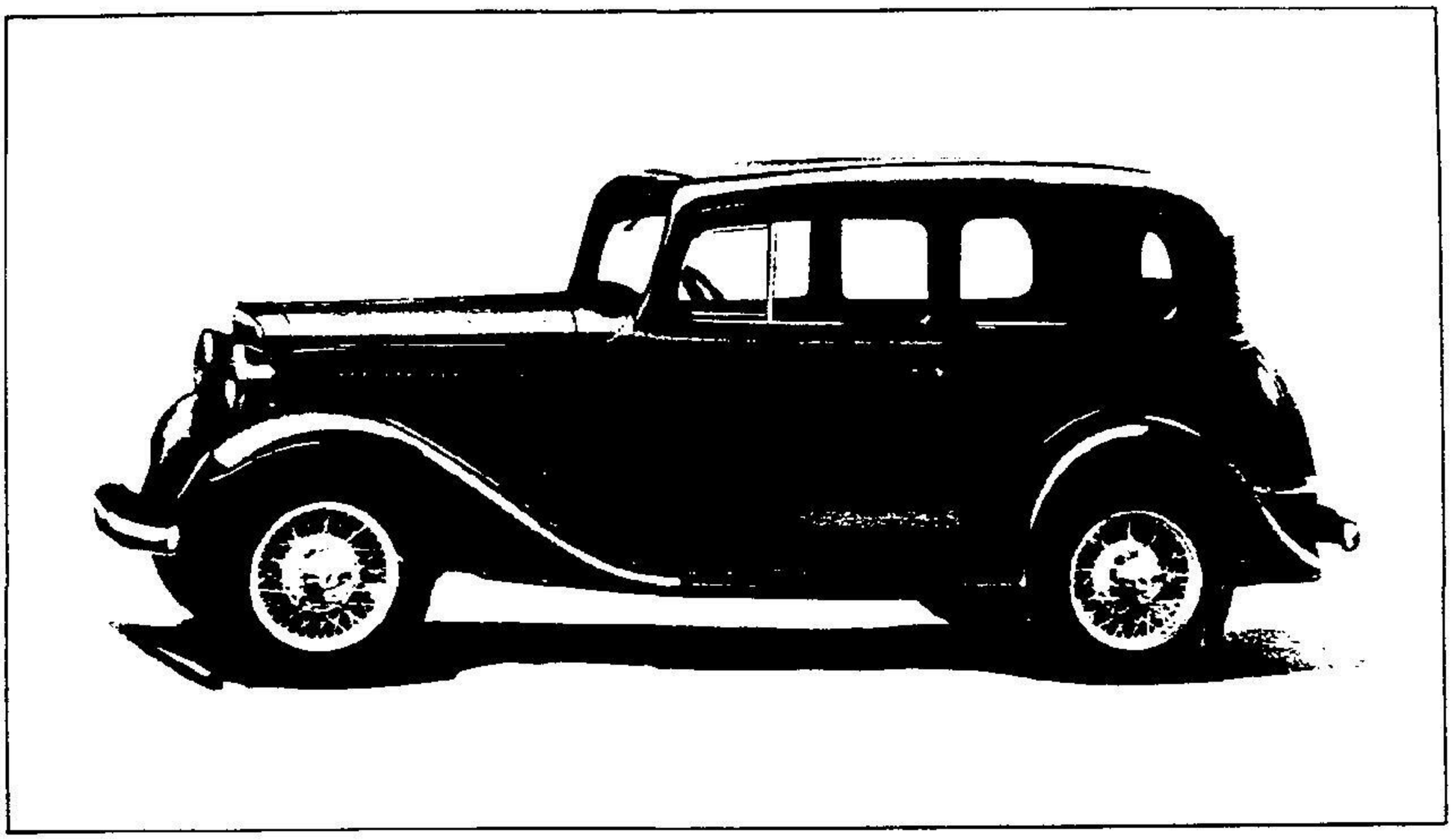

Three types of bodies are included in the line; a coach, coupe and sport coupe. The 1933 Master body design is followed, being gracefully streamlined, sloping at the front

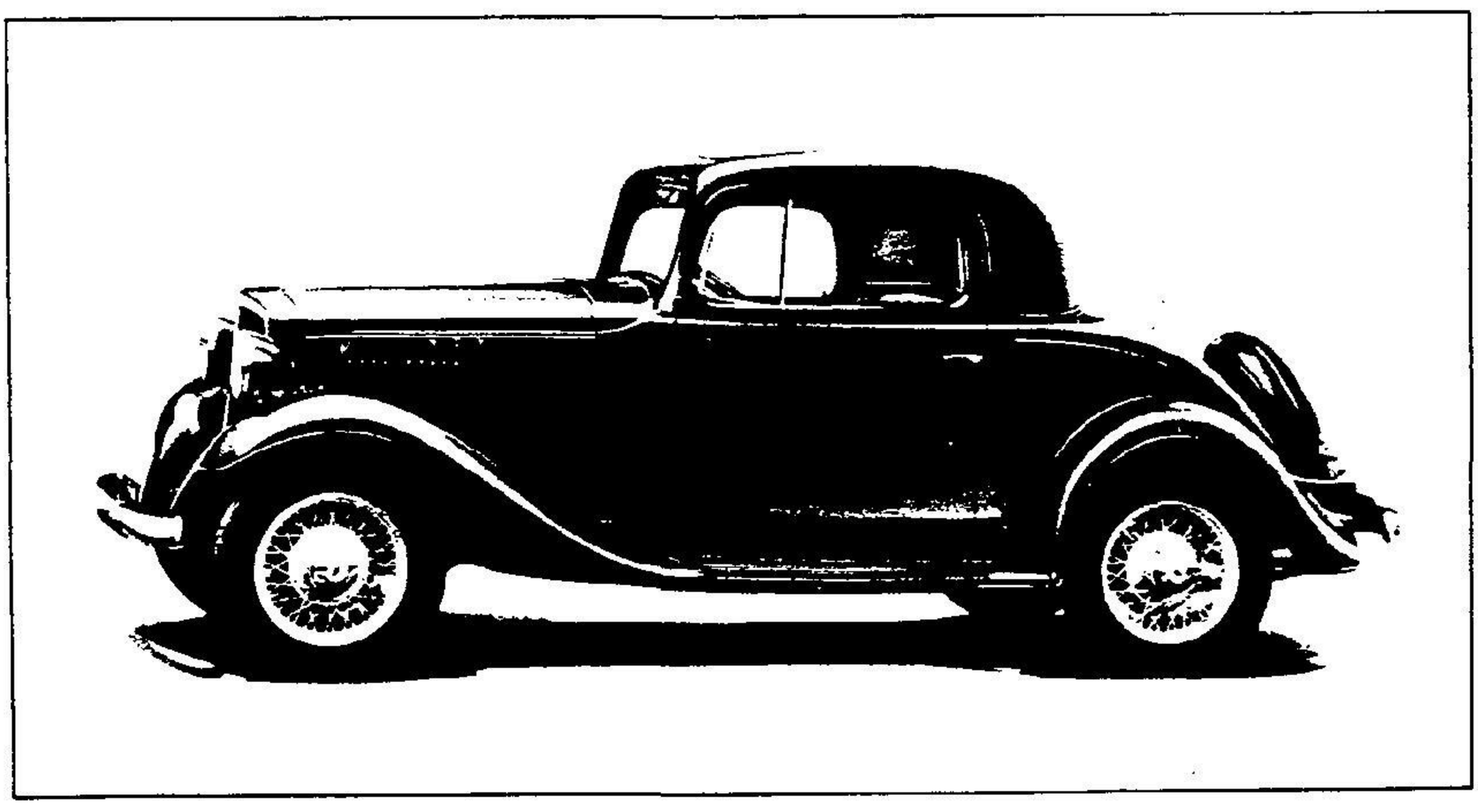

and flowing at the rear, and incorporating many of the 1933 Master refinements and conveniences.

Passenger comfort is attained by roomy well-proportioned seats, so positioned fore and aft to give ample leg room.

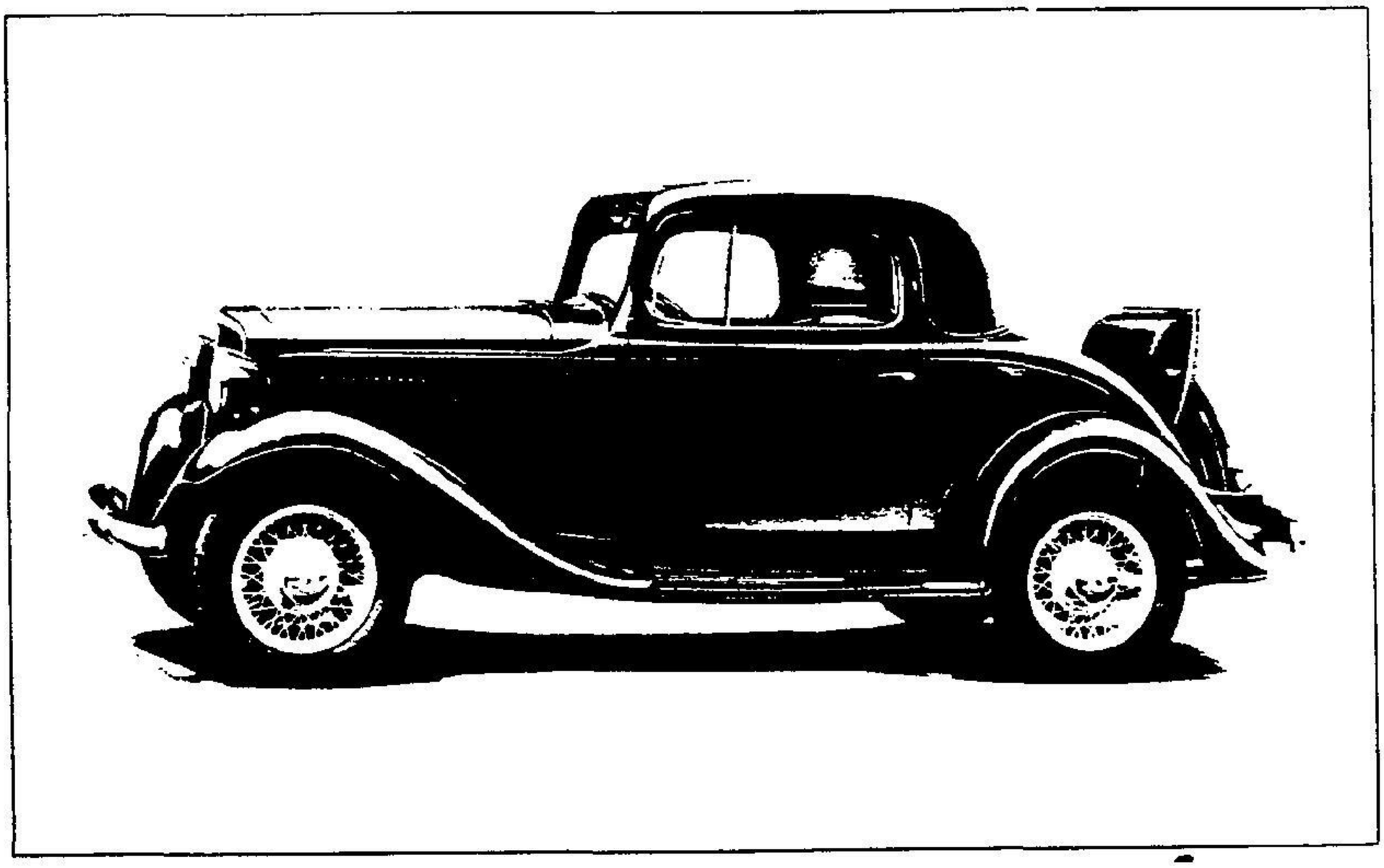

Type	Fisher aer-stream style
Number of body bolts	10
Ventilation	Fisher no-draft
Windshield type	Fixed
Windshield slope	19°
Windshield glass	Safety plate
Cowl ventilator length	17 5/8
Windshield wiper motor	Concealed
Windshield wiper movement	124°
Windshield wiper return	Automatic
Door handle lock	Free turning
Internal door lock	Button
Seat adjustment	Finger tip control
Sun shade support	Both ends
Window glass frame	Narrow chrome bead
Hardware finish	All chrome plated

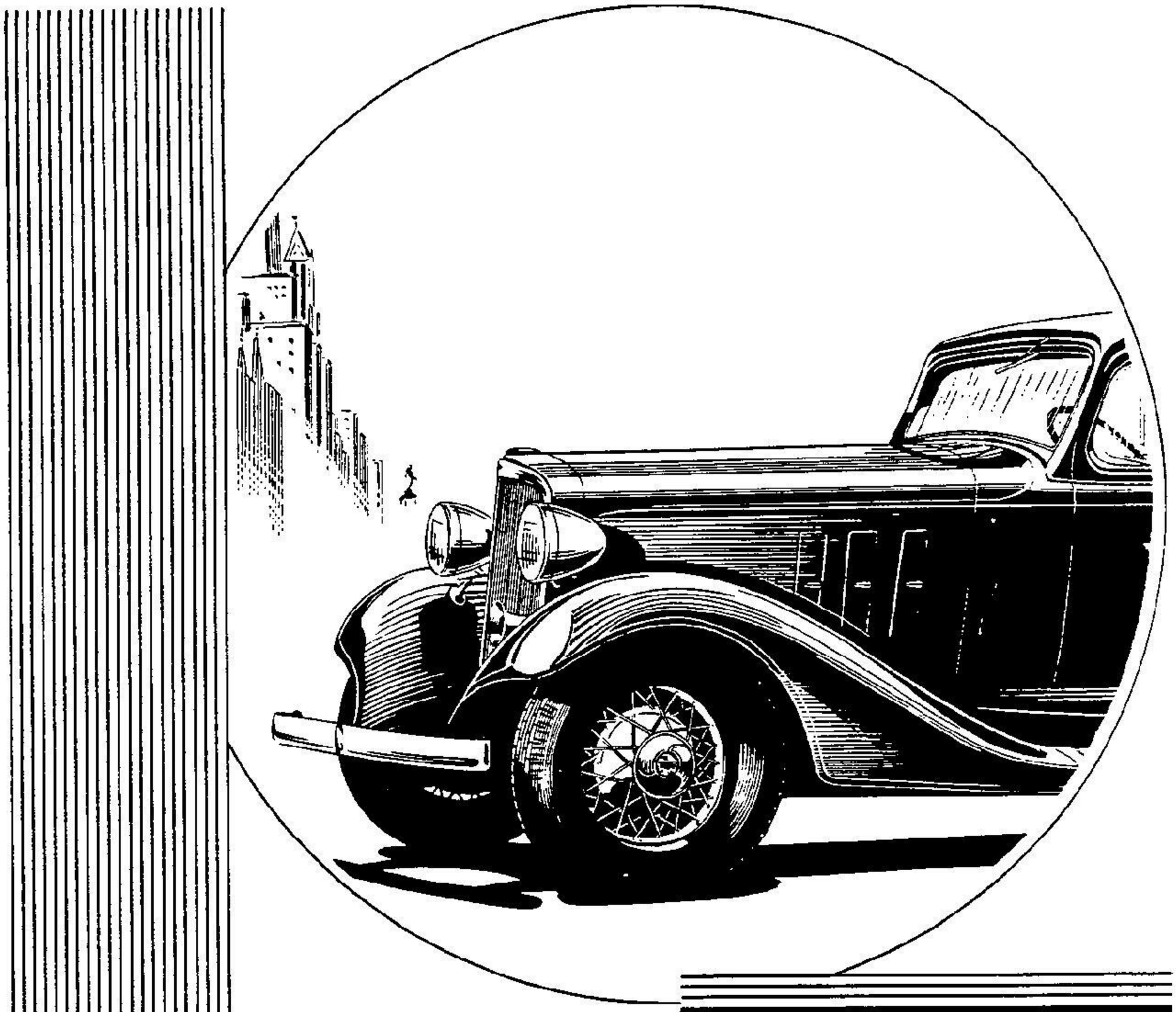

CHEVROLET 1933 PASSENGER CAR ENGINEERING FEATURES

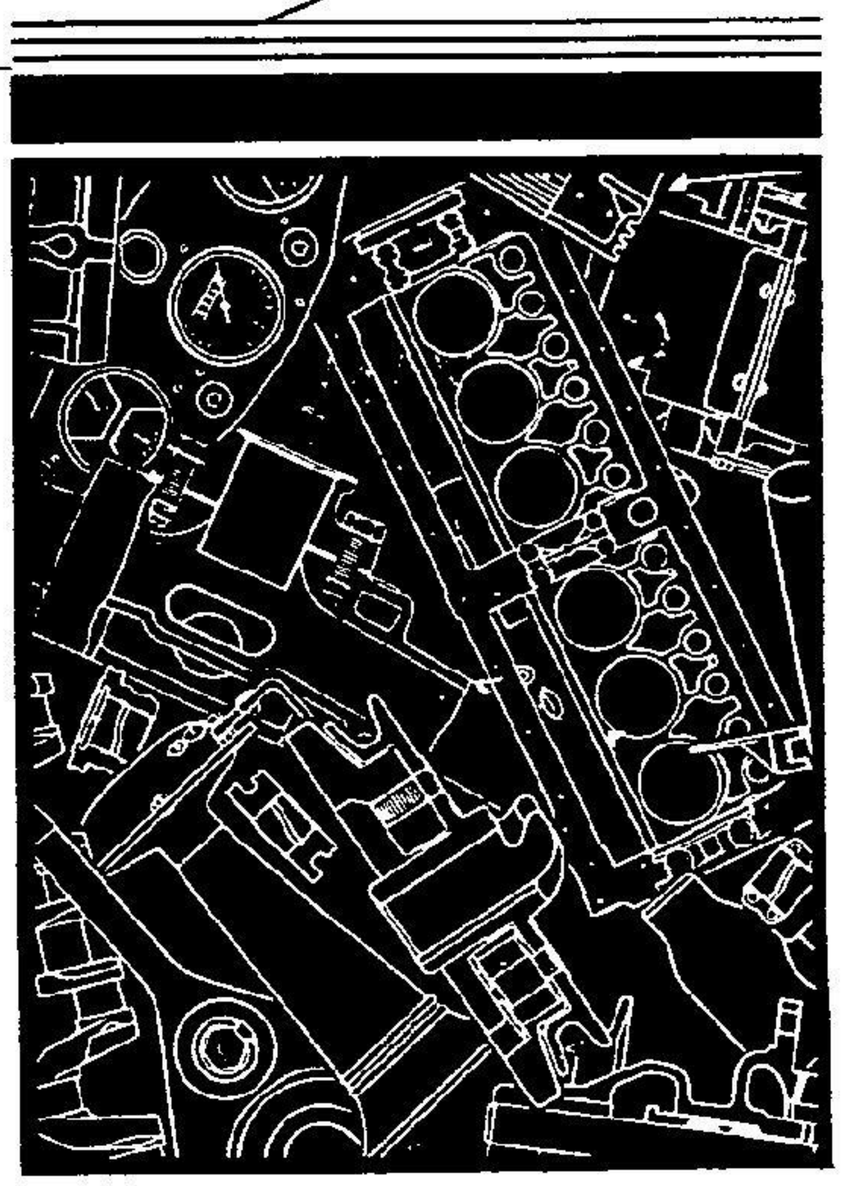

CHEVROLET

INTRODUCTION

The beauty,performance, smoothness and economy of the new 1933 Chevrolet line again reflects the ingenuity of the Chevrolet engineering organization and the efficiency of the Chevrolet production facilities. This outstanding product, like its predecessors, is the result of many months of development to which the entire Chevrolet organization has contributed freely. The many facilities of the General Motors organization have also been utilized.

Dozens of ideas were developed, tested and discarded before the new product was adopted for production. Many of the units were under development for more than two years before they were considered sufficiently perfect for production release. When this new and outstanding product is delivered to the public it will have had the benefit of many hundred thousand miles of testing under unusually severe conditions. For months the production organization has been studying the product and has developed the best possible methods to produce it most efficiently at the lowest possible cost consistent with high quality. All the advantages of a large organization, modern equipment and unusual test facilities are passed on to the motoring public in this latest and most outstanding Chevrolet product.

In both appearance and performance the 1933 Chevrolet is fast and snappy. The novel streamline treatment gives the speedy appearance which is ably backed up by the powerful engine. The lines are smooth and the mechanical units are equally smooth. The sensation obtained from the driver's seat is one of effortless power and eagerness to respond to the driver's will. The trend of the times is also reflected in the small amount of fuel which is consumed in driving this expensive-looking product.

While Chevrolet cars have never been classed as large, heavy vehicles, the longer wheelbase in the 1933 models provides plenty of space to insure a comfortable ride for both front and rear seat passengers. The weight is moderate for its size, but sufficient to insure durability.

In the discussion of Chevrolet features, safety is seldom stressed because it is always in the minds of Chevrolet engineers; and regardless of how clever, efficient or economical a design may be, it is never given consideration unless it is safe. This engineering attitude backed up by rigid tests insures Chevrolet customers of a product in which they may ride with perfect assurance of their safety insofar as it is possible to design and build safety into an automobile.

This book of Chevrolet engineering features is compiled for the purpose of providing authorized persons in the Chevrolet organization with advance information concerning the 1933 models. This information is strictly confidential and is not intended for publication. Only those features which are new for 1933, or were added to the 1932 model late in the season, are described in detail. The following data were collected somewhat in advance of production and are up-to-date as of November 1, 1932. No revisions will be made in this book to cover subsequent changes. Complete specifications will be available later in different form.

This book No. 50 is issued to

Mr. E. P. Hill.

and is intended for his use only

CHEVROLET MOTOR COMPANY

ENGINEERING DEPARTMENT

November
Fifteenth
1932

NEW FEATURES IN THE 1933 MODELS

FRAME

1. Longer wheelbase.
2. Stronger, more rigid frame structure.
3. Deeper side rails.
4. Side rails panelled at rear kickup.
5. Kickup over front axle.
6. Sub-frames added.
7. Reduced cross shaft deflection due to improved bracing.
8. Stronger outer flanges on transmission support.
9. Improved rear cross member.
10. Forged rear spring rear hangers.
11. Stronger step hangers.
12. Battery guard added.
13. Body brackets added.
14. Rear fender brace brackets added.

EXHAUST SYSTEM

15. Larger resonance-type exhaust silencer.
16. Integral exhaust pipe packing flange with separate pilot.
17. Heavier gauge exhaust pipe.
18. Spring-mounted exhaust pipe.
19. Rubber-mounted exhaust silencer
20. Rubber-mounted tail pipe.
21. Larger diameter tail pipe.
22. Increased road clearance under exhaust silencer.

SPRINGS

23. Improved ride due to increased rear spring rate.
24. Rounded edges at spring leaf ends.
25. Thrust washers added at front end of rear springs.

SHOCK ABSORBERS

26. Serrated actuating lever.

FRONT AXLE

27. Heavier I beam.
28. Lower spring pads.
29. Press type inner hub cap.
30. Angle lubrication fittings.

REAR AXLE

31. Larger axle housing with integral reinforcements.
32. Pressed steel axle housing flanges.
33. Stronger, one-piece differential case.
34. Increased differential pinion bearing.
35. Increased gear ratio.
36. More quiet drive gear and pinion.
37. More rivets to attach ring gear.
38. Integral pinion bearing spacer.
39. Wheel hub forged integral on shaft.
40. Hyatt wheel bearing.
41. Wheel bearing closer to center of wheel.
42. Leather oil seal.

BRAKES AND CONNECTIONS

43. Larger brakes - front and rear.
44. Longer and wider linings.
45. Ribbed brake drums.
46. Longer cam bearings.
47. Heavier brake shoe webs.
48. Increased bearing at fulcrum points.
49. Improved shoe alignment.
50. Spring-loaded shoe guides.
51. "Cut-in" parking brake linkage.
52. Increased hand brake operating range.
53. Larger service brake cross shaft.
54. Rubber anti-rattle spacer at hand brake lever grip.

ENGINE

55. Increased piston displacement.
56. Increased power.
57. Improved performance.
58. Smoother operation.
59. Better fuel economy.
60. Heavier crankshaft balanced to closer limits in one plane.
61. Larger diameter crank pins.
62. Larger counterweights.
63. Heavier,more sensitive harmonic balancer.
64. Improved flywheel mounting.
65. Heavier flywheel web.
66. Improved connecting rods.
67. Wider oil control piston rings.
68. Better oil control on cylinder walls.
69. Stronger cylinder head.

70. Smaller spark plugs with gap in more efficient position.
71. Hollow copper spark plug gaskets.
72. Heavier valve springs.
73. Reduced side thrust on valve stems.
74. Better control of overhead lubrication.
75. Spark advance controlled by suction.
76. Graduated manual "Octane Selector".
77. Steel-backed, babbitt center camshaft bearing.
78. Ribbed oil pan flanges.
79. Thicker oil pan gaskets and seals.
80. More secure clamp on oil filler tube.
81. More accessible oil level gauge.
82. Reserve oil for the front water pump bushing.
83. Quiet, staggered four-bladed fan.
84. Improved carburetor.
85. Improved intake and exhaust manifolds.
86. Thermostatic heat control.
87. "Sta-Namic" Balance.

CLUTCH

88. Increased torque capacity.
89. Braided-moulded friction rings.
90. Smoother operation.
91. Stamped clutch fork.
92. Heavier clutch fork ball retainer and spring.

TRANSMISSION

93. Helical constant-mesh gears.
94. Improved reduction ratios.
95. Single pocket free wheeling unit.

FUEL SYSTEM

96. Larger fuel tank.
97. More accessible filler.
98. T-bolt strap mounting.

STEERING GEAR

99. Increased gear ratio.
100. More stable steering gear mounting.
101. Improved insulation at instrument panel.

CONTROLS

102. Clutch and brake pedals mounted on frame.
103. Larger pedal bushings.
104. Rubber pedal pads.
105. Rubber-covered, pedal-type accelerator control.
106. Starter control operated by accelerator pedal.
107. Rubber floor board seal at transmission cover.

WHEELS AND TIRES

108. Beautiful, new, tri-form hub caps.

SHEET METAL

Front Fenders
109. Streamline design.
110. Deeper crown.
111. Longer nose.
112. Braced full outer skirt.
113. Wider beading.

Running Boards
114. Integral with apron.
115. Curved upward at front.
116. Moulded rubber mat on steel base.
117. Easily replaceable mat.

Rear Fenders
118. Streamline design.
119. Deeper crown.
120. Longer tail piece.
121. Full outer skirt braced to frame.
122. Concealed front license bracket mounted on spring horn.
123. Flaring, streamlined rear deck cover.
124. Improved sloping hood with three doors at each side.
125. Continuous hinge at hood top.
126. Reinforced hood side panels.
127. Improved conical engine underpans.

ELECTRICAL EQUIPMENT AND INSTRUMENTS

128. Improved tail and stop lamp with reflex glass lens.
129. Bayonet tail and stop lamp connectors.

130. License tag mounted above tail lamp.
131. Improved rubber insulated tail lamp bracket.
132. Lower-powered stop lamp bulb.
133. Separate fuse in stop lamp circuit.
134. Improved headlamp appearance and mounting.
135. Improved cowl lamp appearance.
136. Rubber horn terminal cover added.
137. Improved instrument arrangement.
138. Airplane type instruments.
139. Two instrument panel bulbs.
140. Improved convex lenses on all instruments.
141. Definite alignment of control buttons.
142. Provision for electrical accessory.
143. Ignition lock connected to coil.

RADIATOR

144. Sloping "V" radiator.
145. Improved, sloping radiator shell.
146. Two-tone shell finish.
147. Integral, chrome-plated "V" grille.
148. Improved core.
149. Ornamental radiator cap.

WHEEL CARRIER

150. Heater, more rigid wheel carrier.

OPEN BODIES

151. Streamline design.
152. Improved moulding treatment.
153. Increased leg room.
154. Larger doors.
155. More comfortable seats.
156. Increased windshield slope.
157. Increased top overhang.
158. Natural wood top bows.
159. Improved seat cushion construction.
160. Larger cowl ventilator.
161. Built-in ventilator screen.
162. Depressed instrument panel.

CLOSED BODIES

163. Streamline design.
164. Increased length and width.
165. Longer, lower windows.
166. Stronger pillar construction.
167. Improved door hinge mounting.
168. C.V. draft deflectors.
169. Improved hardware.
170. Free-turning door handles.
171. Larger cowl ventilator.
172. Built-in ventilator screen.
173. Larger sun visor.
174. Increased windshield slope.
175. Shatterproof glass in windshield and draft deflectors.
176. Depressed instrument panel.
177. Finger-tip seat adjustment in Coach.
178. Wider doors.
179. Draft protection at bottom of doors.

SPECIAL EQUIPMENT

180. Six-tube super hetrodyne radio.
181. Improved bumpers.
182. Rubber tire cover.
183. Improved metal tire cover.
184. Metal tire cover plate.
185. Windshield defroster.
186. Wireless cigarette lighter.
187. License plate frame unit.
188. Eagle radiator cap of new design.
189. Rear view mirror glare shield
190. Spring covers.
191. Improved trunk rack.
192. Improved luggage carriers.

DETAILS OF THE 1933 FEATURES

FRAME

The frame in the 1933 passenger line is entirely new. It is lengthened to provide for the 1 7/16" increase in wheelbase, and all cross members and brackets are redesigned and relocated accordingly. A kickup at the front end of the frame permits lowering the entire job. The addition of sub-frame members on each side, near the dash, increases the strength and rigidity of the frame and provides an ideal mounting for the engine. The frame side rails are much stronger due to an increase in their depth at the middle. The rear kickup is increased and the strength at this point is also increased by the addition of a depressed panel in the web of the side rails. This depression provides a double rib effect along the edges of each rail. Pads are raised from the panel to

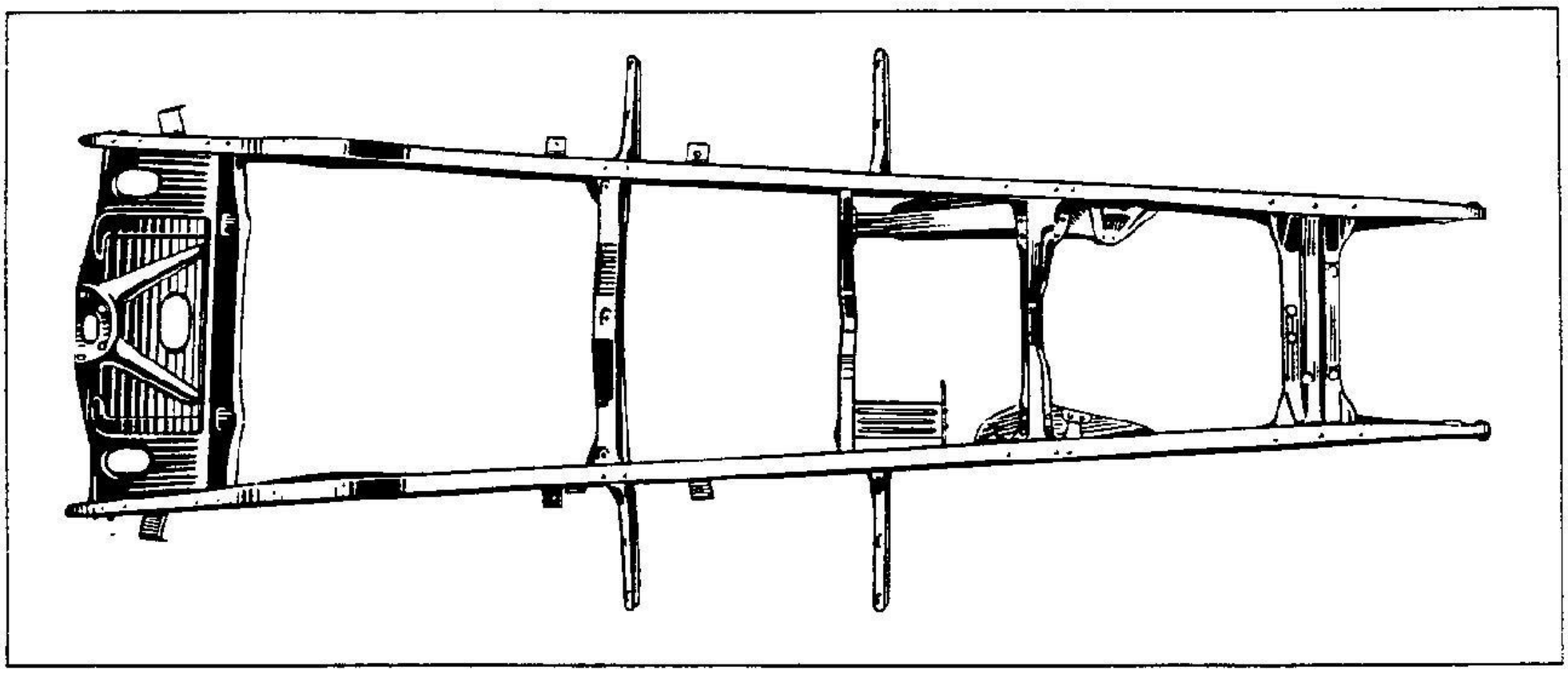

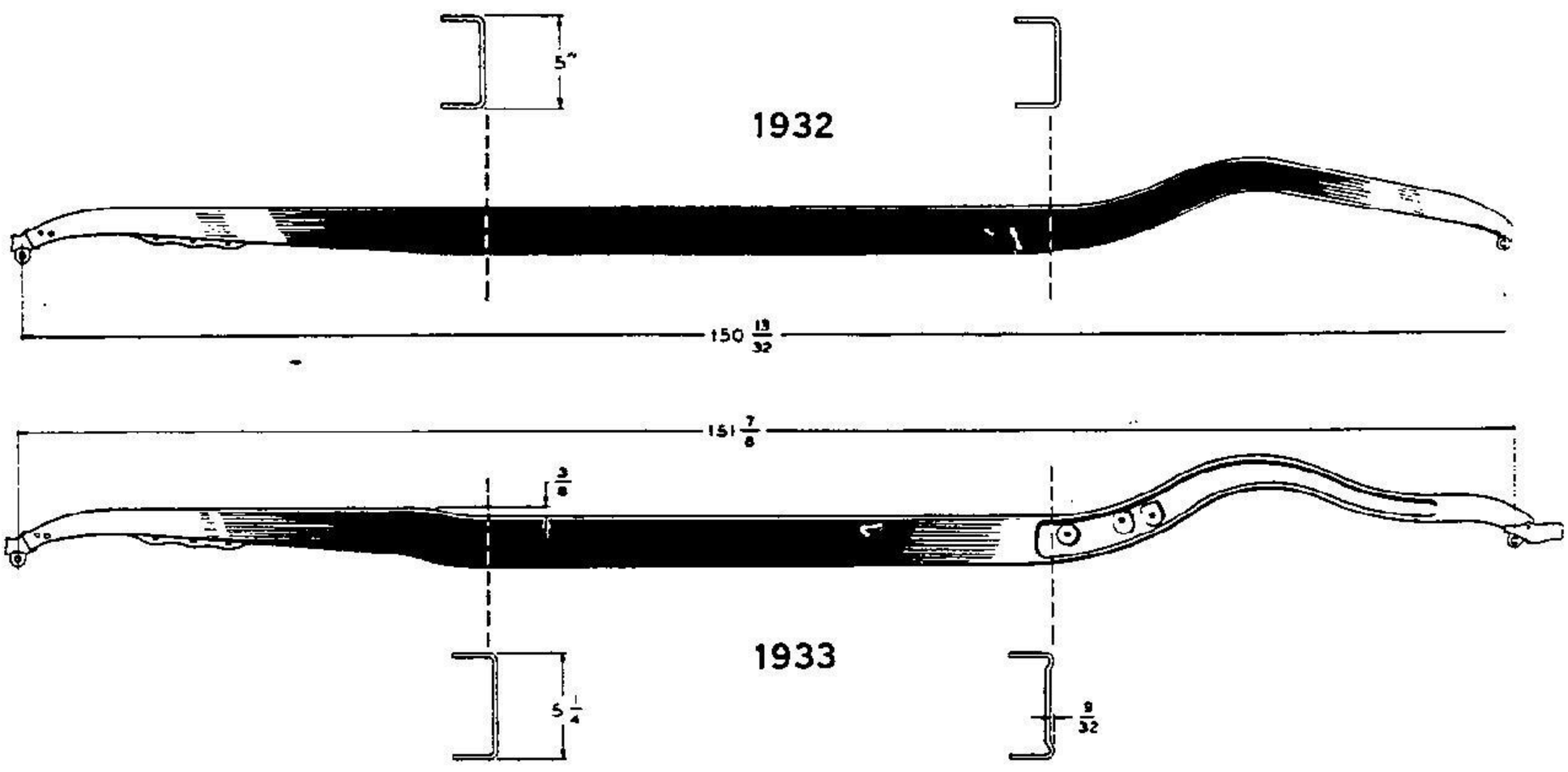

provide for the attachment of the rear shock absorbers. The width of the top flange at the front end is increased by the elimination of the cut-out which was provided for manufacturing purposes. The depressed ribs at the front spring rear hangers are also retained for their stiffening and strengthening effect.

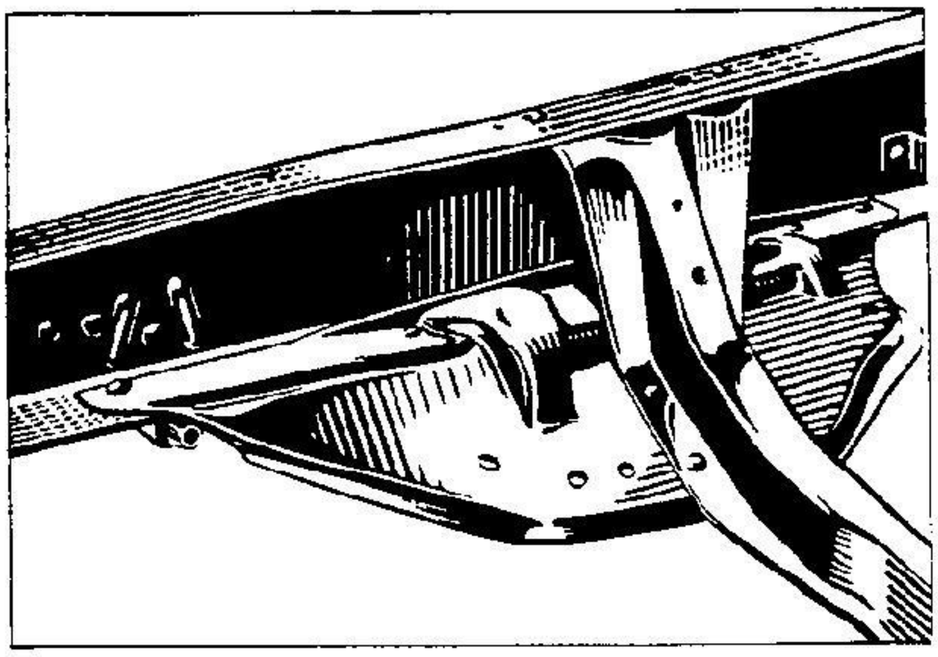

Sturdy sub-frame members are added at each side in the vicinity of the dash. On the right hand side the sub-frame takes the form of a pair of gussets extending forward and rearward from the supporting cross member for an overall distance of 24 inches. The sub-frame is 7/64 thick and about 6 1/2 inches wide at its point of attachment to the cross member. It is deeply ribbed and has a vertical flange extending along its inner and outer edges. A flat depression is provided for attachment of the engine mounting. Additional stiffness is provided at this point by a wide, tapering stamped rib. Another raised rib extends upward into the channel of the supporting cross member further increasing the rigidity at this point. Seven rivets secure this strong sub-frame to the lower flange of the right hand side member, while attachment to the supporting cross member is made by four rivets thru its flanges.

The left hand sub-frame has an overall length of approximately 35 inches and is of the same general design at its front end. Toward the rear it extends to the transmission support cross member which it braces, preventing excess deflection in the brake cross shaft attached to that member. Six rivets secure this sub-frame to the side rail and four attach it to the flanges of the supporting cross member. Toward its rear end the section blends into a channel shape with the open side downward. Two ears are bent over at the extreme rear end where two rivets

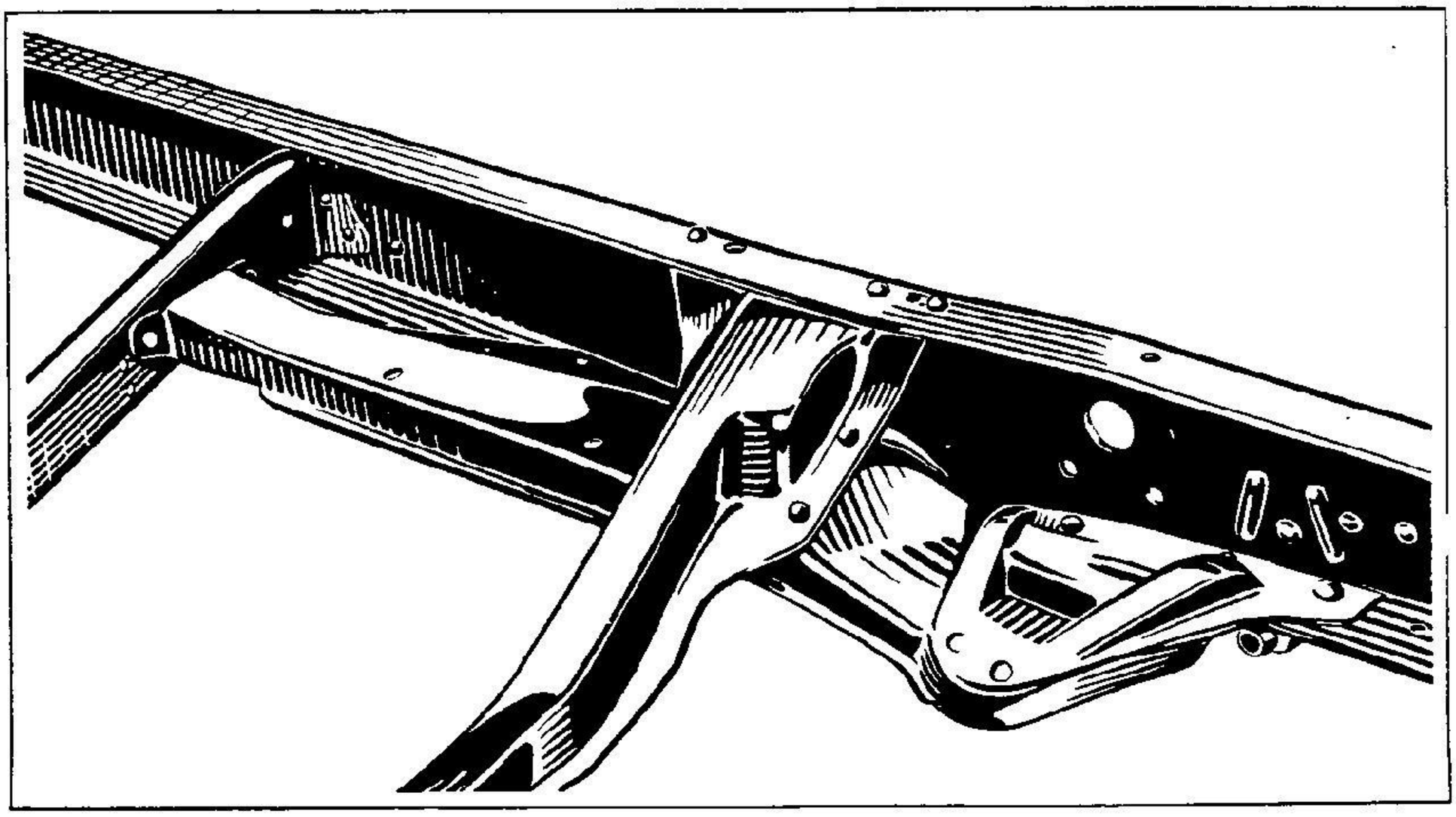

secure the sub-frame to the vertical web of the transmission support member.

SUB-FRAME SUPPORT

The sub-frame support cross member is designed to co-operate with the new sub-frame structure. It is attached to the upper flanges of the side rails by five rivets, and to the sub-frames by eight rivets. The front body bolts also pass thru its flanges. At the left side it extends farther forward than at the right side affording better support for the sub-frame and increasing the rigidity of the frame.

TRANSMISSION SUPPORT

The upper flange of the transmission support cross member is wider, and its flanges for attachment to the webs of the side rails are blended into the top flange of the cross member. This increases the rigidity at the points of attachment.

REAR CROSS MEMBER

The rear cross member is completely redesigned to conform to the new shape of the frame, to provide for the larger gasoline tank and for the improved spare wheel carrier. It is much wider and is attached to the upper flanges of the side rails by six rivets, while eight rivets secure it to their

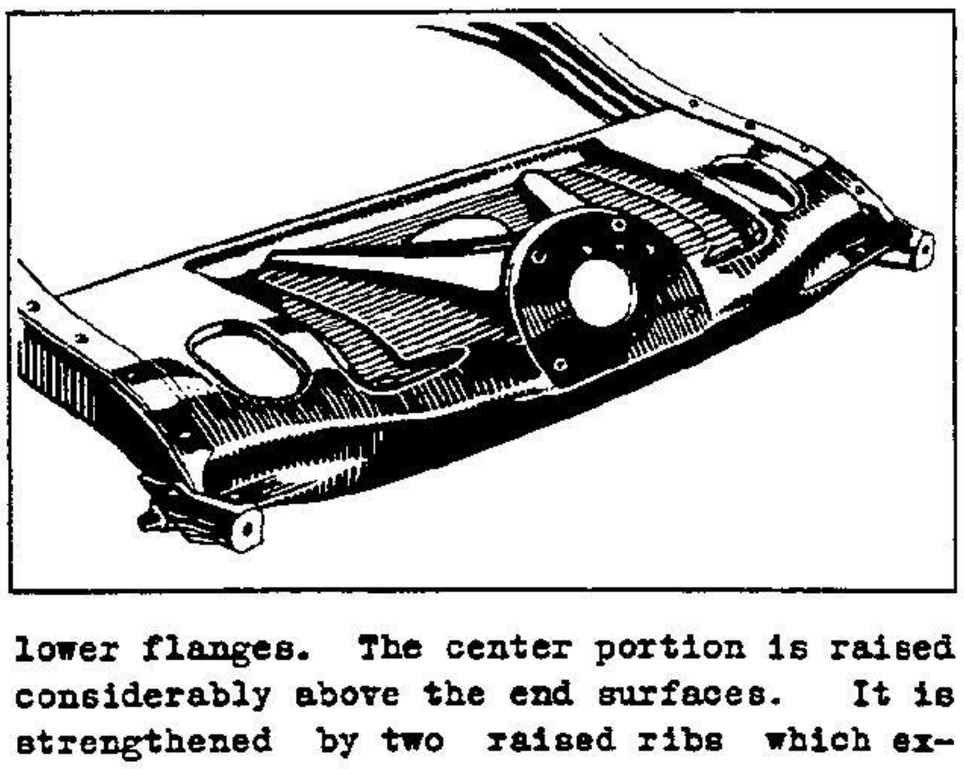

lower flanges. The center portion is raised considerably above the end surfaces. It is strengthened by two raised ribs which extend forward with a considerable spread. Four anchor nuts are provided for the attachment of the wheel carrier. These are permanently riveted in place for easy assembly. The depressed ribs against which the gasoline tank seats have considerable stiffening effect. The opening for the gasoline tank filler neck is punched at the bottom of a depression which gives the effect of a continuous rib around its periphery. The nuts for the two rear body bolts are staked into elongated slots in the rear cross member in such a way as to prevent their dislodgement, but permitting them to slide fore and aft to insure alignment during assembly.

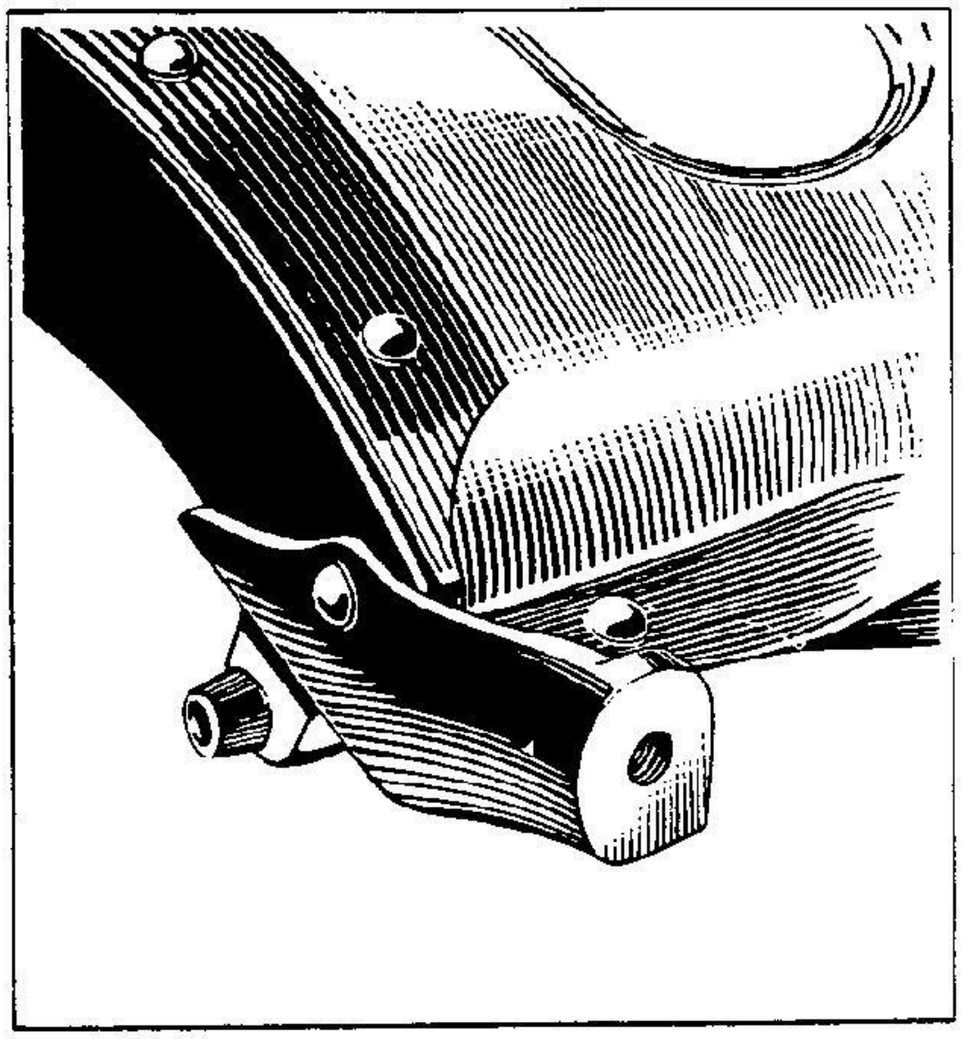

The rear hangers for the rear springs are completely redesigned. They are made from steel drop forgings, and are attached to the outside of the side rail by two rivets thru the lower flange and one rivet thru the web on each side. This new and improved design permits the spring to be hung directly under the end of the side rail instead of being overhung from its end as heretofore. It also provides better support for the bumper which is mounted considerably farther toward the rear from the spring shackle bolt.

STEP HANGERS

The step hangers are redesigned to accommodate the new running boards and to eliminate

local weaknesses. They are much more rigid because of the increased depth of the channel section and the addition of stiffening ribs at the lower ends of the channel extending

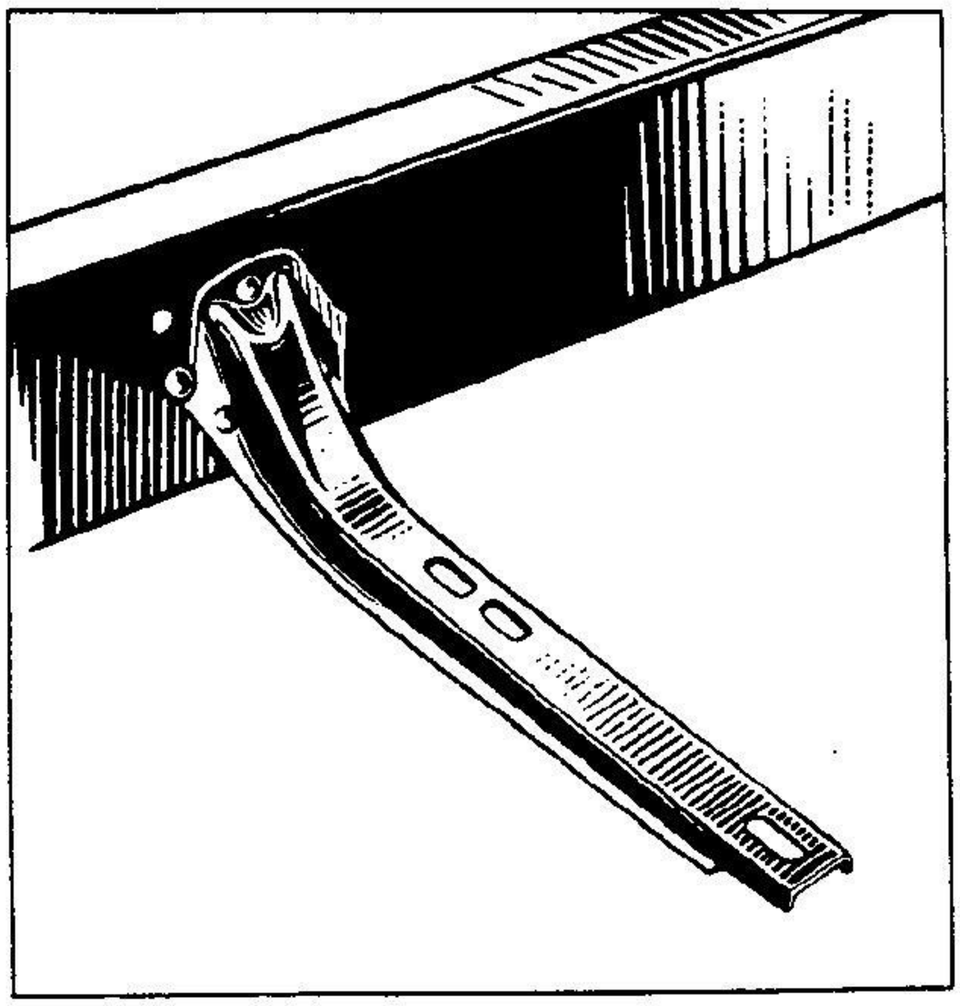

the full length of the hangers and blending into the attaching pad. The new design and position of the running boards permits a reduction in the drop of the hangers which also contributes to their increased strength.

A guard has been added at the front of the battery hanger to protect the battery case

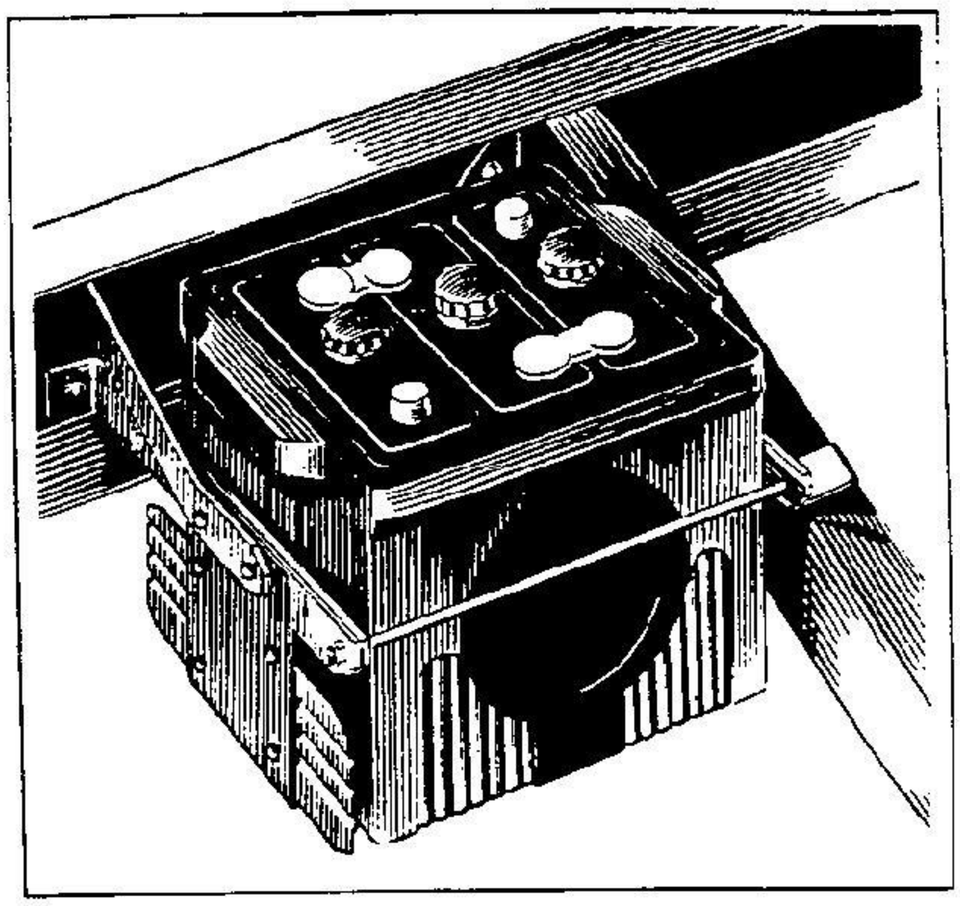

from flying stones. The guard is of sheet steel corrugated for increased strength and rigidity. Larger rivets secure the hanger strap to the transmission support.

BODY BRACKETS

Body brackets are added to each side of the frame directly in front of the rear step hangers to provide two additional points of attachment for the body.

COMPARATIVE SPECIFICATIONS

	1932	1933
Wheelbase (actual)	108 9/16	110
Kickup over front axle	None	3/8
Side rail depth at middle	5	5 1/4
Kickup over rear axle	4 7/8	5 5/8
Side rail panels over rear kickup	None	9/32 deep
Right hand sub-frame thickness	None	7/64
Left hand sub-frame thickness	None	7/64
Transmission support outer flange tie	To web	To web and upper flange
Rear spring rear hanger material	Malleable iron	Forged steel
Attachment of hanger to side rail	Inside by 2 rivets	Outside by 3 rivets
Stap hanger section	Channel	Flanged channel
Battery guard	None	Corrugated steel
Battery hanger rivet diameter	1/4	5/16
Number of body brackets	2	4

EXHAUST SYSTEM

The design and mounting of the new 1933 exhaust silencer and its connecting pipes were developed in connection with the more powerful motor and its balanced resistance mountings. The new exhaust system silences the exhaust noise and provides sufficient flexibility to relieve the joints and brackets of undue strain.

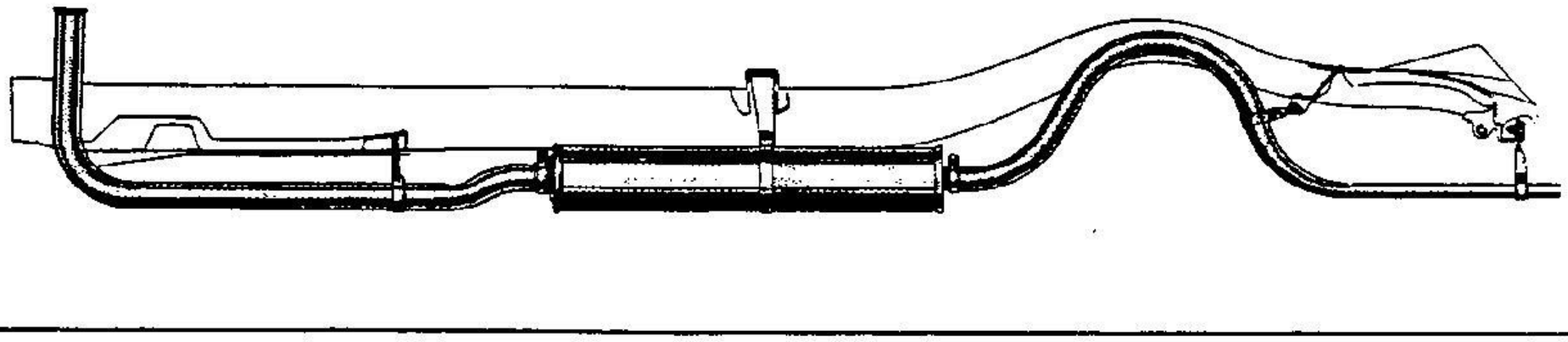

During the 1932 season the method of attaching the exhaust pipe to the manifold flange was improved. With this new attachment the conical seat is integral with the pipe while

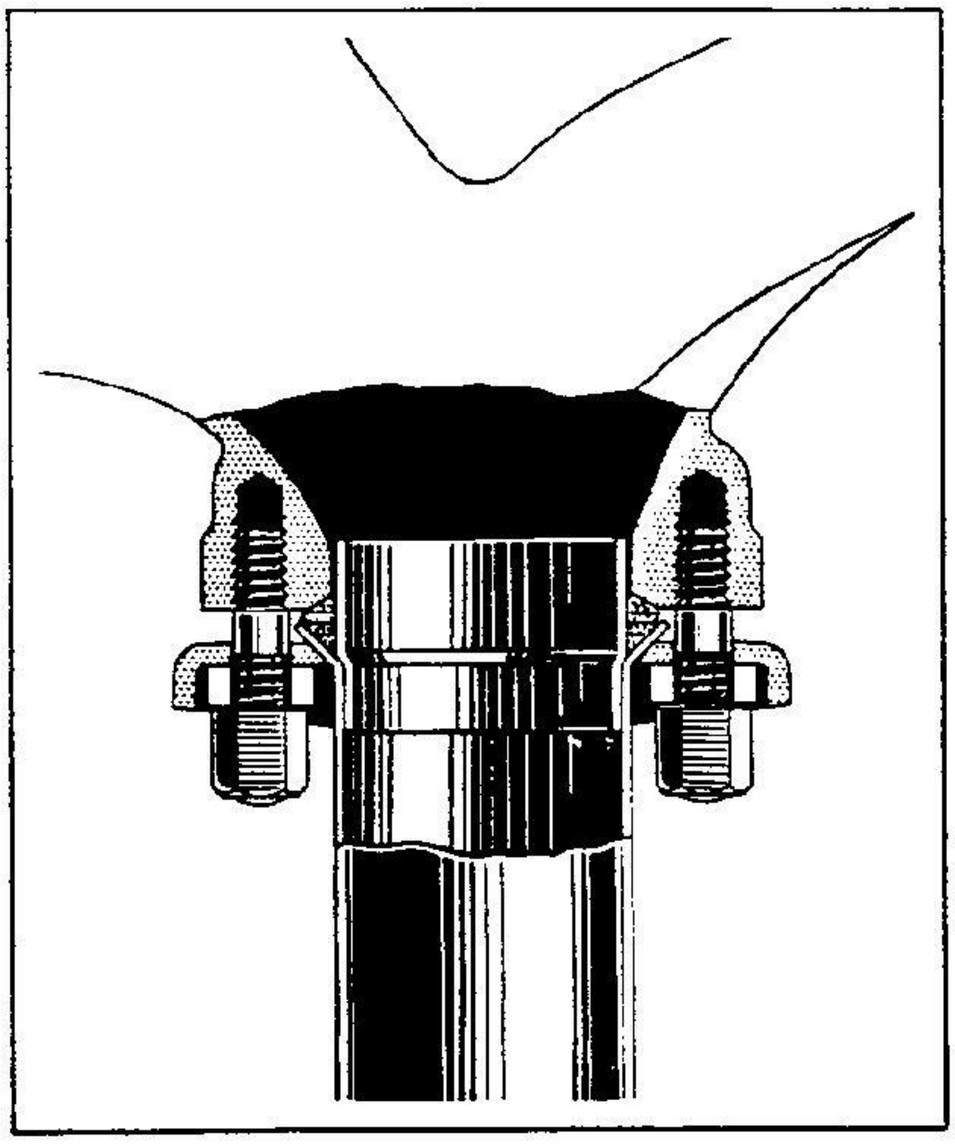

the cylindrical pilot is formed from a separate piece and welded to the pipe. This forms a more durable, leak-proof joint by removing the points of strain and leakage from the juncture of the two parts. The exhaust pipe terminates at the forward end of the silencer, where it is securely clamped inside a pilot. It is resiliently suspended from the sub-frame by means of a coil spring. This flexible mounting relieves the exhaust system of strains due to distortion caused by constant heating and cooling.

The exhaust pipe is made of heavier gauge metal which has less tendency to resonate due to vibration.

The exhaust silencer is of the resonance type, based on the same harmonic principle as the intake silencer, which has given such universal satisfaction in the past year. The purpose of a muffler or exhaust silencer is to release the exhaust gases from the engine to the outer atmosphere with the least possible difference in temperature and pressure. The new 1933 exhaust silencer accomplishes this purpose most effectively, eliminating the rumbles and metallic noises which are present in some exhaust systems. The sound emanating from the tail pipe is a smooth continuous purr which is pleasing to the ear. The exhaust gases enter the first expansion chamber of the silencer under high pressure and at a high temperature, and pass successively into four expansion chambers thru a multiplicity of very small holes in each. The area of the holes in each chamber is smaller than those in the preceding chamber. The small size and large number of these holes, as well as their graduated area from chamber to chamber, break and re-break the exhaust gases into an infinite number of small streams which dissipate much of their heat and pressure by contact with the relatively cool walls of the expansion chambers. As the exhaust gases and noises leave the

last expansion chamber they separate. This separation is made possible by the fact that gas has a body and can be propelled in a certain direction by pressure, while noise has no body and tends to go in all directions, restrained only by the walls within which it is confined.

In the large tube leading into the tail pipe where the noise separates from the gases, four large holes with smoothly rounded edges open into the tuning chambers where the noises are absorbed. A long tuning shell, supported at its forward end, reverberates with the vibratory noises, setting up a series of vibrations pitched to a different key.

A shorter tuning shell, supported on the rear head of the silencer, sets up another series of vibrations in its own key. These two separate vibratory pitches counteract each other, silencing the objectionable noises. Any gases which may enter the tuning chamber pass to a large chamber outside the tuning shells,

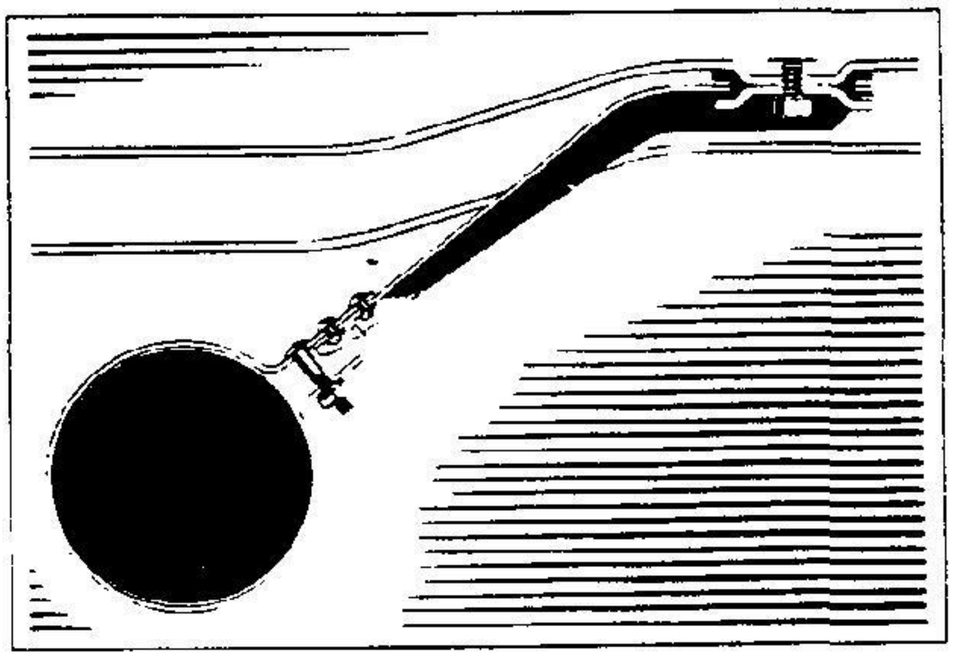

from which they may reach the atmosphere thru a small vent hole.

The overall effect of pressure reduction and silencing is a product of scientific proportioning of the various chambers, shells and orifices according to harmonic principles.

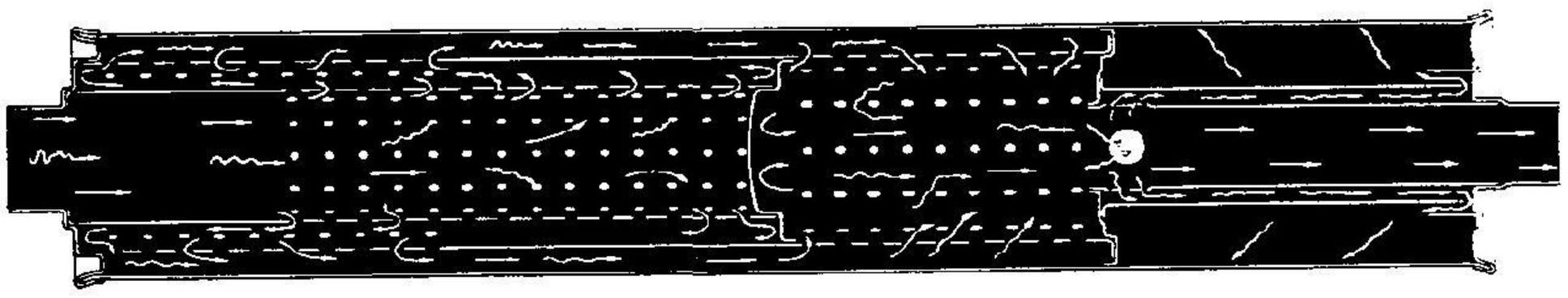

The silencer is supported by a bracket mounted at the center of the third cross member with rubber insulation. This type of

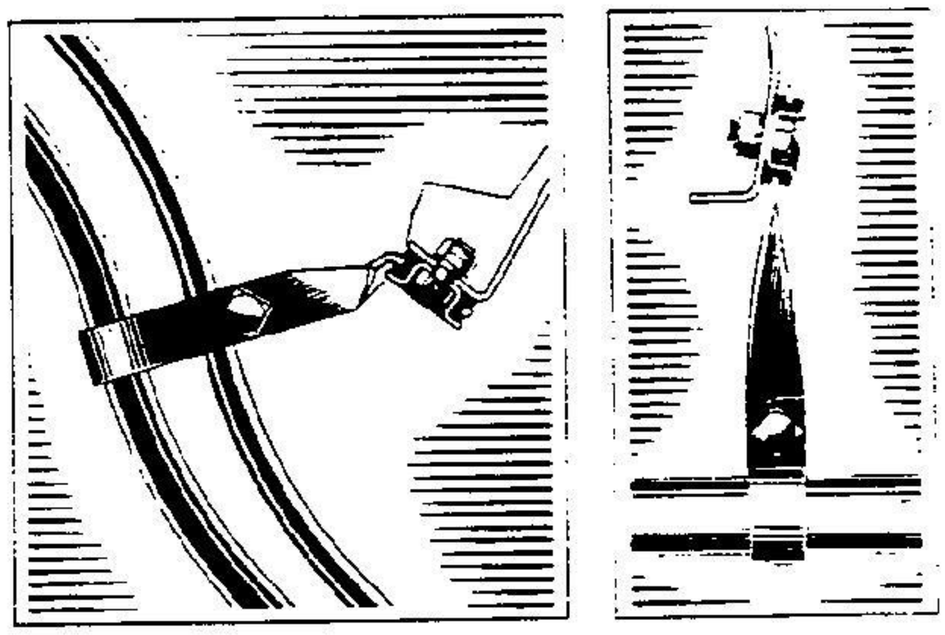

mounting permits the silencer to oscillate with the engine about a neutral point.

The tail pipe is enlarged in diameter to further silence the exhaust. It is securely clamped over a pilot at the rear end of the silencer. At its rear end the tail pipe is flattened to insure further silencing and ample road clearance. The tail pipe is supported from the rear cross member by two brackets, both of which are insulated by rubber at their points of attachment to the cross member.

The road clearance of the exhaust silencer is increased and the entire system is moved closer to the center of the chassis where it is farther from adjacent parts which might be damaged by its heat. A better circulation of air around the system itself is afforded with a consequent increase in silencing due to reduced temperature and pressure.

COMPARATIVE SPECIFICATIONS

	1932	1933
Exhaust silencer type	Baffle	Resonance
Exhaust silencer length	20 1/2	30
Exhaust silencer mounting	Metal to metal	Rubber insulated
Exhaust pipe flange	Separate	Integral
Exhaust pipe mounting	Rigid	Spring
Exhaust pipe gauge	.0375	.0438
Tail pipe outside diameter	1 1/2	1 3/4
Tail pipe mounting	Metal to metal	Rubber insulated
Minimum road clearance under exhaust silencer	9 1/2	10 5/8

SPRINGS

Both the front and rear springs on all 1933 models are improved by the addition of a rounded edge at the ends of each leaf. This is accomplished by forming the ends of the leaves downward presenting a generous radius at the point of contact with the longer leaf above. Thus undue wear of the leaves caused by constant rubbing of the sharp edges, is eliminated preventing the possibility of breakage due to reduction in sectional area.

The riding qualities of all models are improved by the selection of a rear spring having the requisite rate and deflection characteristics to suit the weight distribution of each body type.

The Alemite lubrication fittings at all of the spring shackle bolts have been carefully considered and the fittings are redesigned

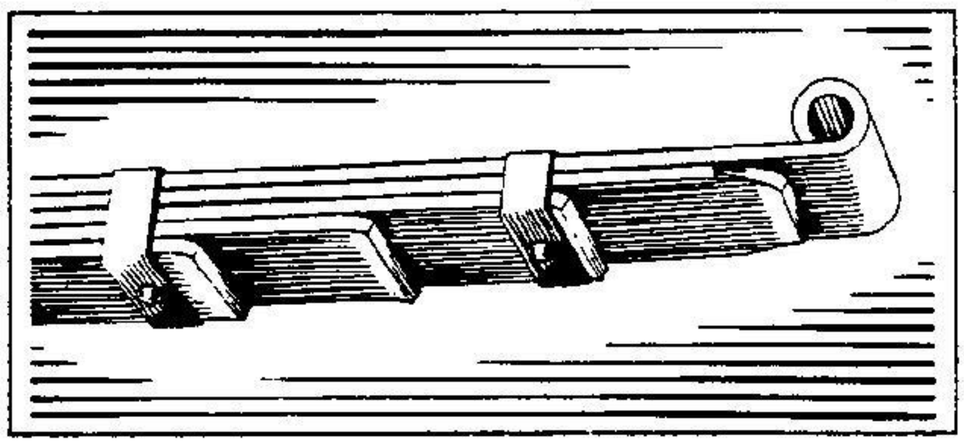

to insure free passage of the lubricant and easy accessibility.

Proper fit of the rear springs in their front hangers is insured by the provision of thrust washers of varying thickness at each side of the springs. When the springs are assembled thrust washers of the proper thickness are selected. This permits the springs to be assembled snugly, eliminating excessive side

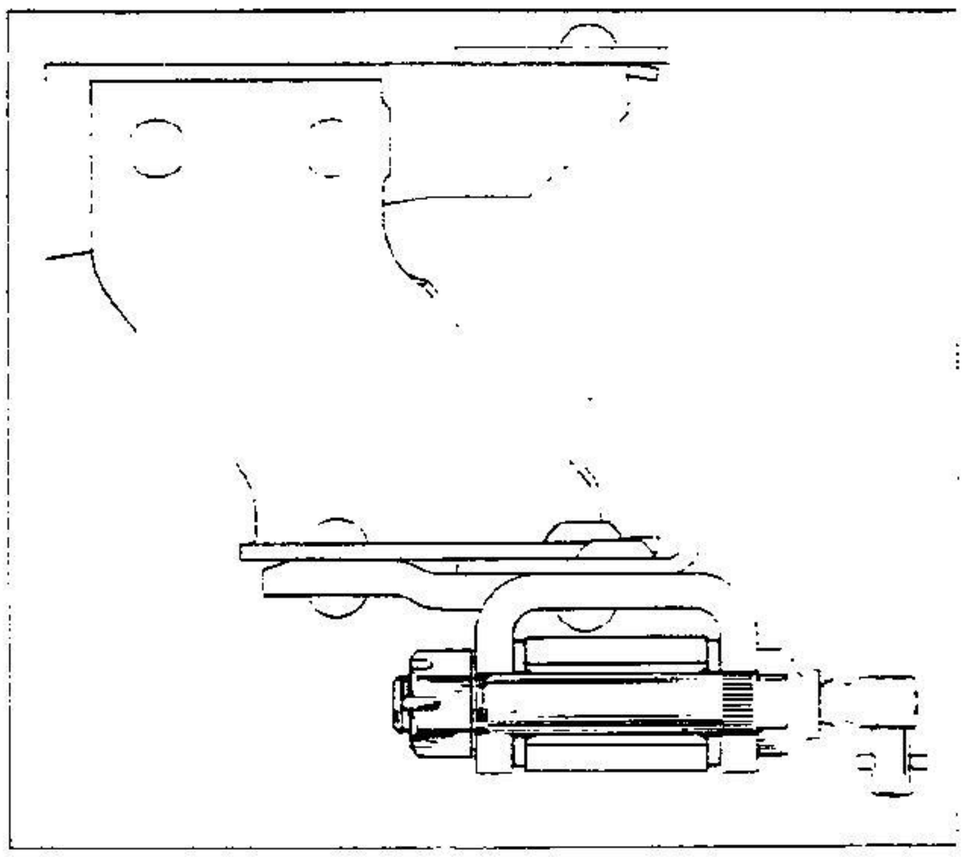

motion with the resulting wear and noise. With this proper fitting of the springs at assembly quiet operation for a longer period is assured and the means for easy replacement of worn washers in service is provided. This eliminates the bending of the lugs on the spring hanger and the possibility of excessive clearance or misalignment.

COMPARATIVE SPECIFICATIONS

	1932	1933
Spring leaf ends	Sharp	Rounded
Rear spring front thrust washers	None	Selected
Front spring rear shackle lubrication elbow.	65°	90°
Sport Roadster rear spring rate	98#	105#
Sedan rear spring rate	105#	130#
Coach rear spring rate	105#	130#

SHOCK ABSORBERS

In the improved 1933 shock absorbers the inside actuating lever is attached to the shaft by the engagement of serrations. This eliminates the necessity for a set screw and the possibility of breakage due to local weakness. The mounting pad at the shaft end of the housing is enlarged to present greater bearing area at its point of attachment to the frame. The thickness of the rubber at the upper end of the links is increased to provide more effective insulation and cushioning. The length of the rear links is reduced to compensate for the lower position of the frame.

COMPARATIVE SPECIFICATIONS

	1932	1933
Shock absorber lever attachment	Set screw	Serrations
Thickness of rubber flange	1/8	5/32
Length of rear links	8 1/2	8

FRONT AXLE

During the 1932 season, the I beam of the front axle was made heavier and stronger. The depth of the I section, the width of the flanges and the thickness of the web were increased. The thicker spring pads are 3/8" lower in relation to the spindle. This, in combination with the double drop frame, permits the body sills to set 3/4" closer to the ground. The offset of the steering arms is increased a corresponding amount to maintain the position of the tie rod back of the I beam. Lubrication of the front axle bearings is facilitated by a plain cap pressed into the outer end of the hub, and by the use of angle lubrication fittings, which make the points of lubrication more accessible. The spindle washers are cyanide hardened to improve their wearing qualities.

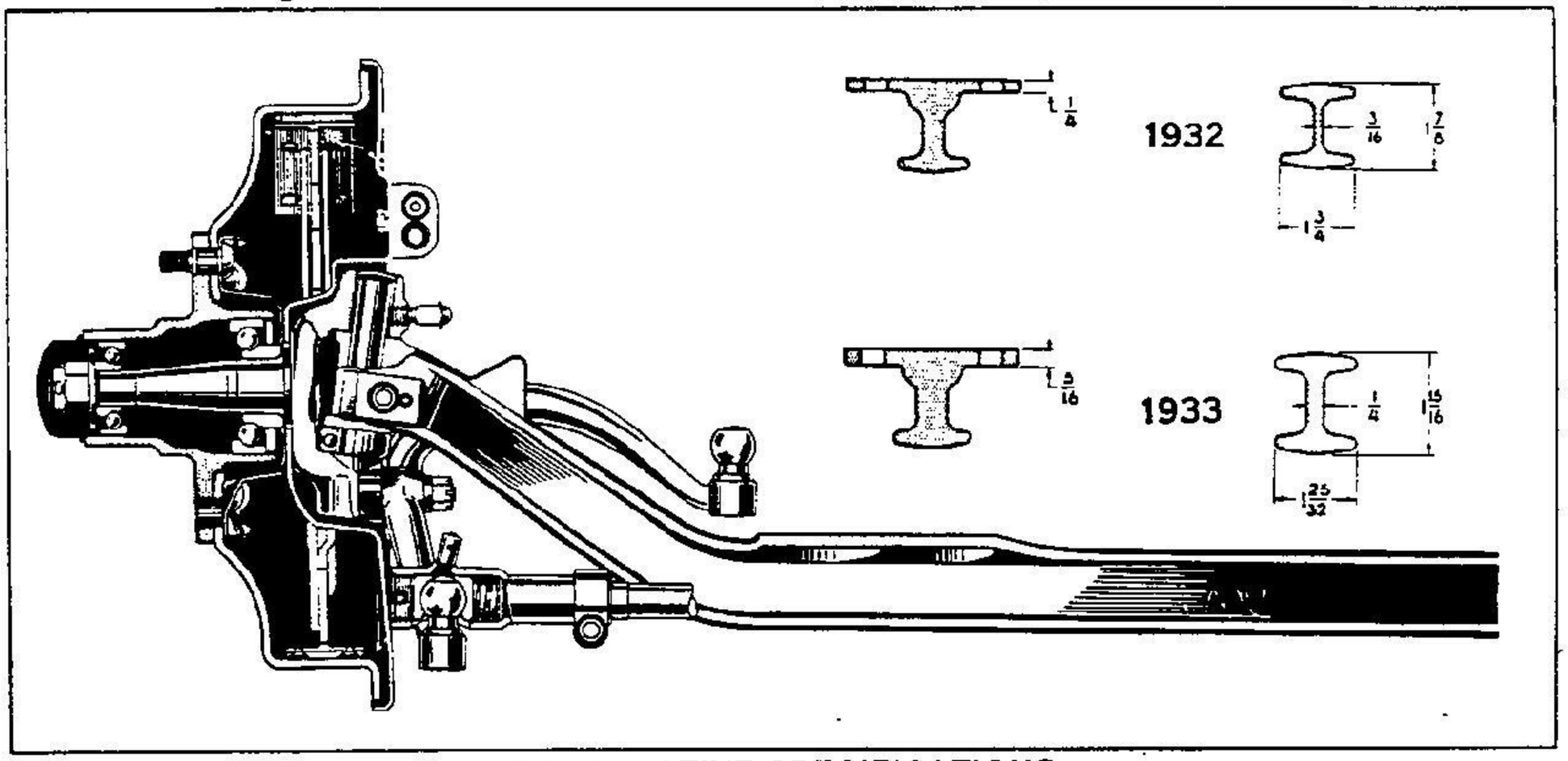

COMPARATIVE SPECIFICATIONS

	1932	1933
I beam depth	1 7/8	1 15/16
I beam width	1 3/4	1 25/32
I beam web thickness	3/16	1/4
Distance from spindle center to spring pads.	2 3/4	3 1/8
Steering arm offset	2 23/32	3 3/32
Inner hub cap	Threaded	Press type
Lubrication fittings	Straight	Angle
Spindle washer material	Soft steel	Steel, cyanide hardened

REAR AXLE

The 1933 rear axle is completely redesigned. The axle housing is larger and stronger. The banjo portion at the center is enlarged to take the new differential unit. It is flattened at the top, and also at the bottom, to

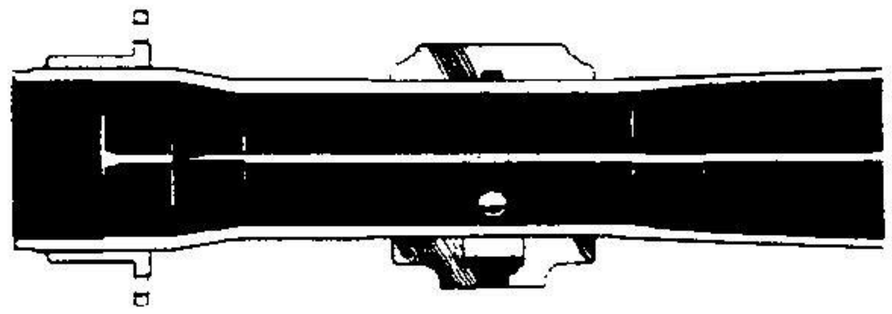

maintain the road clearance. The reinforcement around the inner edge of the banjo opening is integral with the housing. This gives the housing greater strength at this point because of the increased thickness of the reinforcement and because it is integral with the housing metal. The metal thickness at the outer ends of the housing is increased by swaging before forming. In their final form the ends of the housing are about 3/8" larger in diameter than the tubular portion

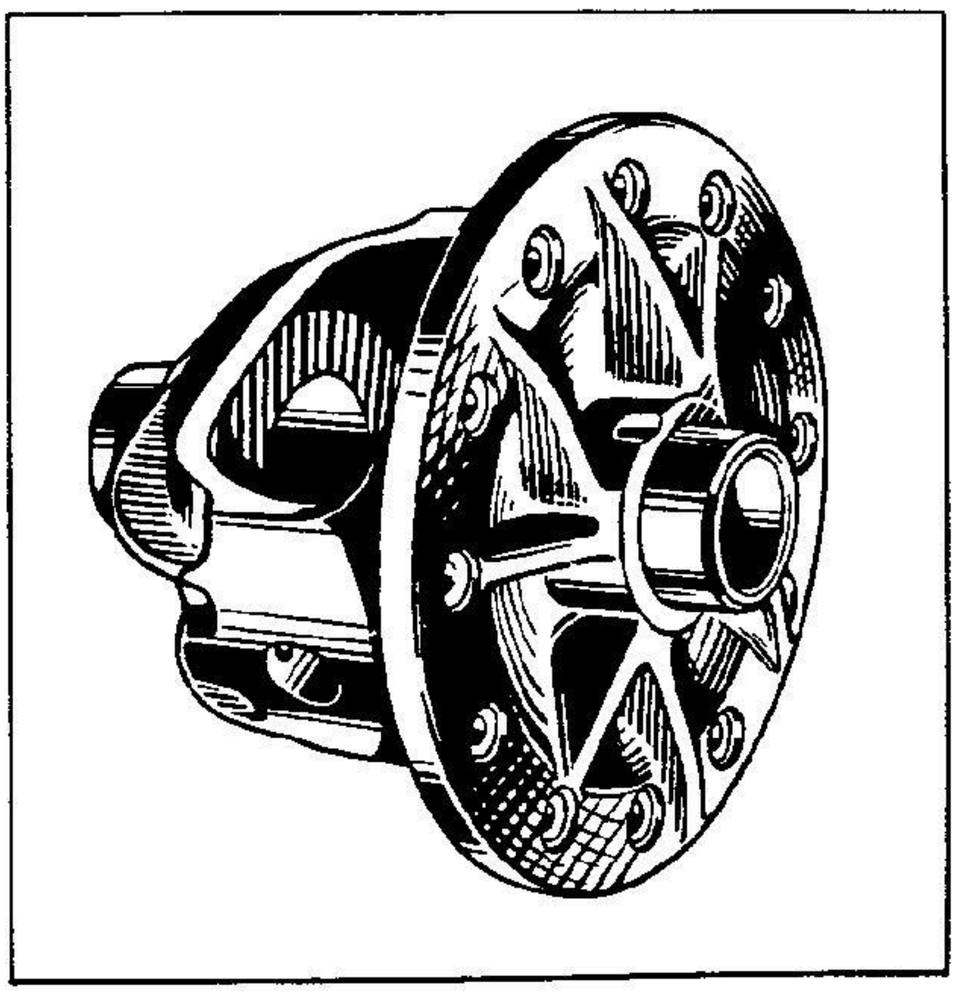

just inboard of the bell-mouth. A stamped steel flange is pressed on each end of the housing and securely arc-welded around its entire circumference.

The new differential unit is housed in a one piece malleable iron case, insuring greater strength and more perfect alignment. The bearings have a greater span and the flange for the ring gear is larger in diameter. The walls of the case are increased in thickness and four lateral ribs of greater depth are added to the four shorter radial ribs to increase the rigidity. Two sides of the case are open and therefore more accessible for assembling operations.

The differential side gears are splined and

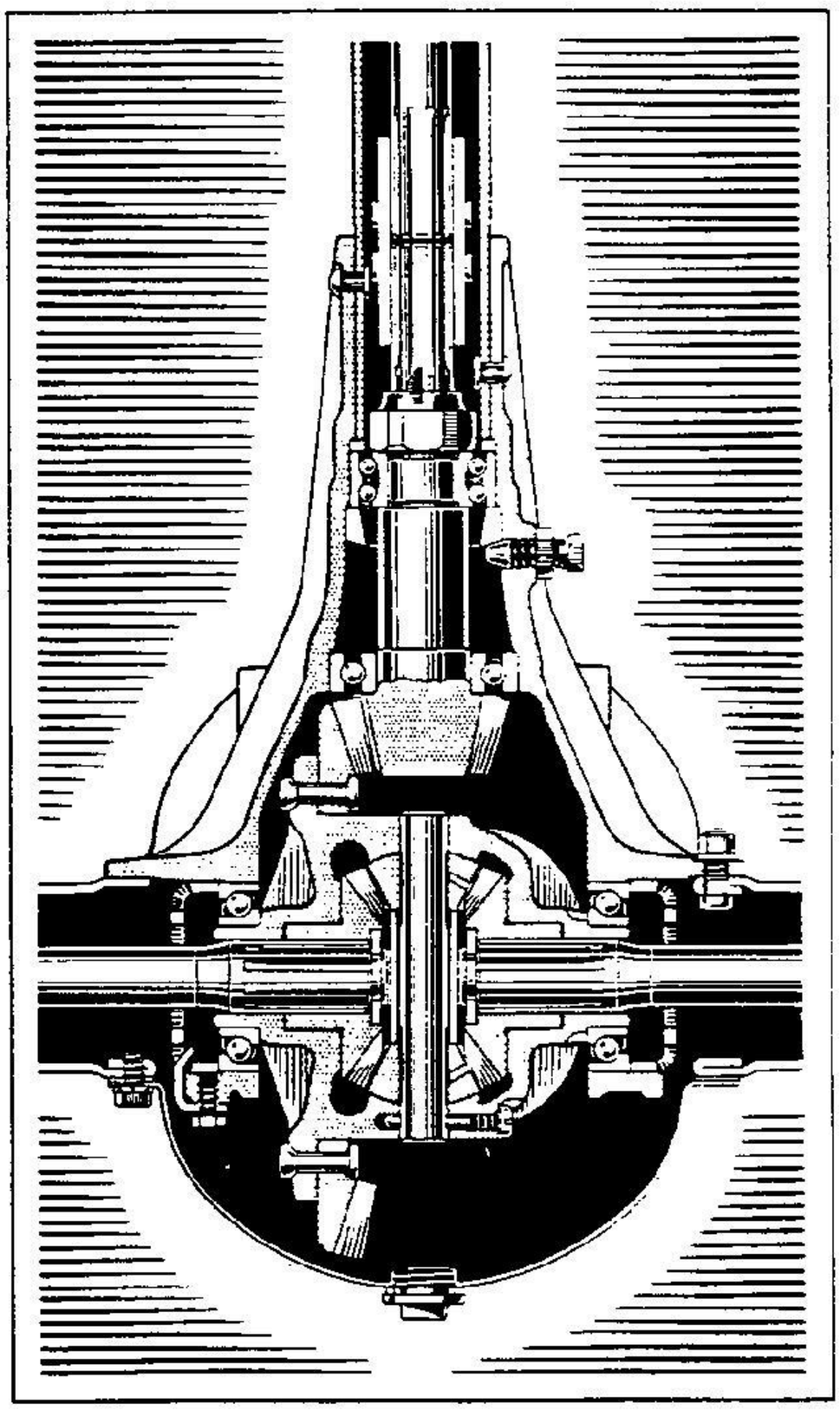

retained on the axle shaft by "C" washers which seat in the counterbores of the gears. Three oil holes are drilled between the teeth of each differential pinion to insure proper

lubrication. These pinions also have greater bearing lengths. Rotation and endwise movement of the differential pinion shaft is prevented by a screw having a long plain end which passes entirely thru the shaft and engages the case beyond the shaft. The differential carrier is enlarged and strengthened. The attaching bolts are located on a

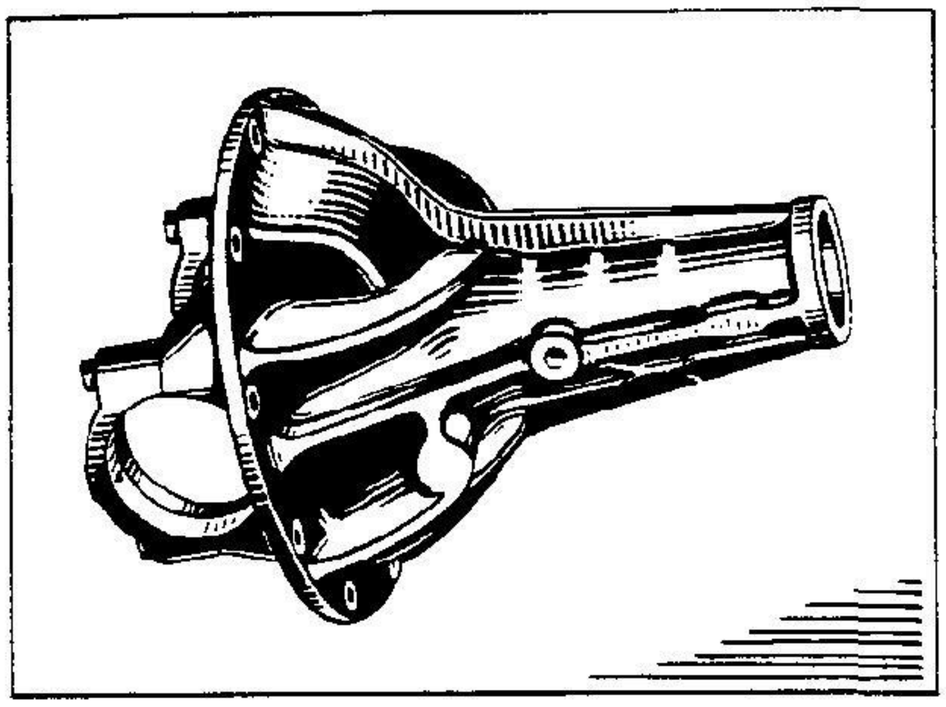

larger circle and the flange is increased in diameter. The shape of the carrier walls is improved to give greater strength which is still further increased by the improved ribbing.

The teeth of the new ring gear and drive pinion are redesigned for more quiet operation. The pinion has nine teeth and the gear thirty seven as compared with ten and forty one. This reapportionment slightly increases the gear ratio, and as the lesser numbers of teeth are disposed on the same pitch diameters, the teeth are wider and therefore stronger.

The ring gear is attached to the differential case by twelve rivets spaced on a larger circle. The rear pinion bearing is redesigned to reduce deflection between the ring gear and pinion. It has a larger bore and a greater number of smaller diameter balls. The increased bore permits a like increase in the stem diameter of the drive pinion. This increased diameter extends forward to the front bearing, forming an integral spacer between the two bearings.

The axle shaft rigidity is increased by the use of a double taper construction. Its wheel hub is forged integral at its outer end. This results in a stronger, more rigid structure and eliminates the necessity for the long tapered spindle on which the separate hub was formerly mounted. The outer end of the shaft is mounted in a Hyatt roller bearing having sixteen rollers 9/32 in diameter and 5/8 long. This wheel bearing is moved outward over one inch so that the load is applied closer to the center of the wheel. An oil deflector in combination with a leather seal insures against oil leakage at the outer end. The leather seal is kept in contact with the shaft by a coil spring which is wrapped about the leather exerting a con-

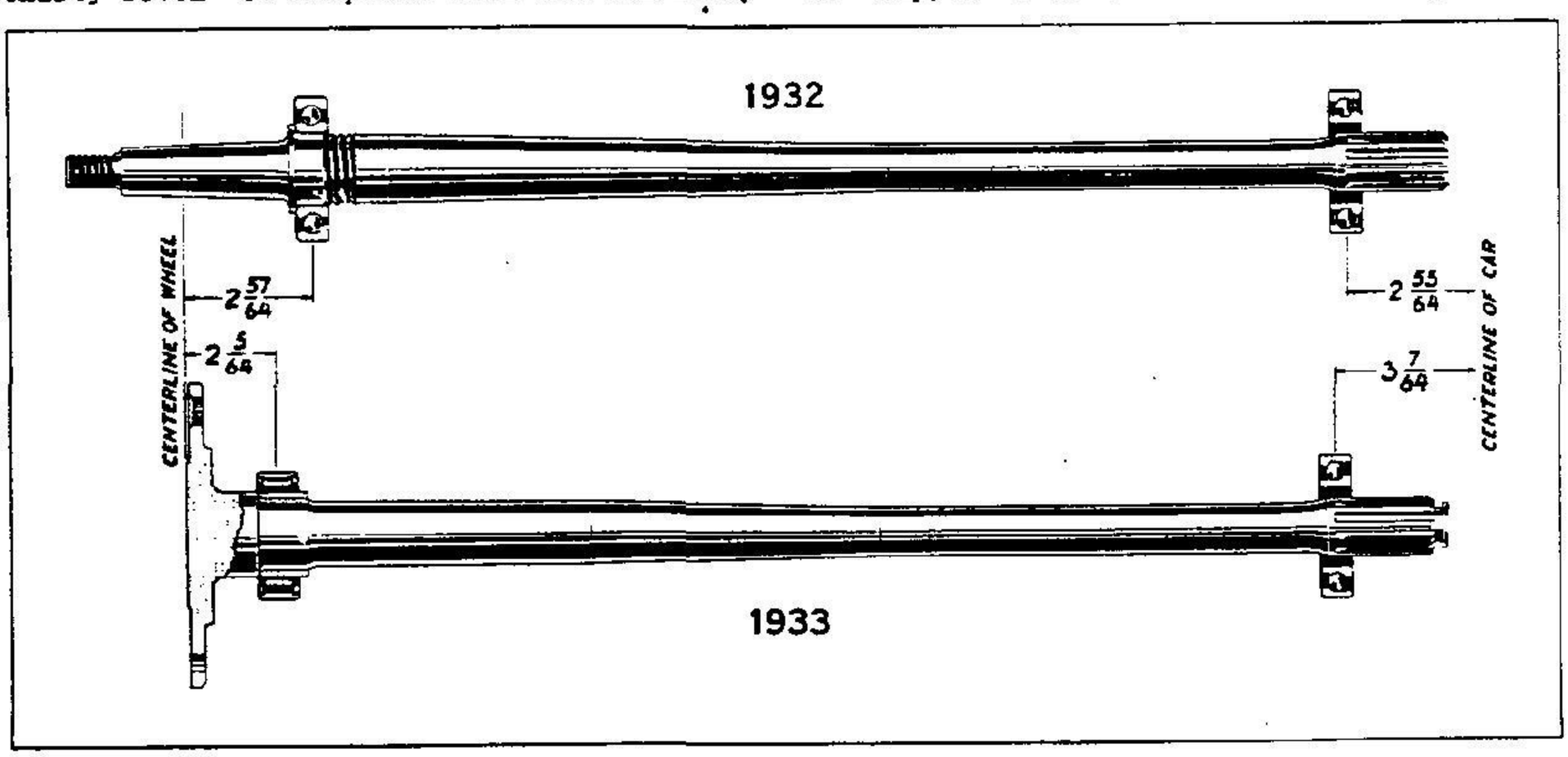

stant inward pressure. With this new construction the axle shaft and wheel may be easily taken out as a unit. This is accomplished by removing the inspection cover from the axle housing and removing the differential pinion and spacer thru the large opening in the side of the differential case. With these parts out of the way the axle shaft may be pushed inward until the "C" washer is clear of the counterbore and can be removed. The shaft then slides easily out of the splines in the side gear.

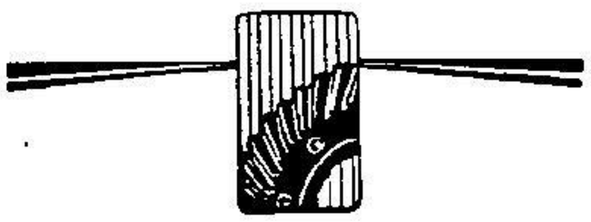

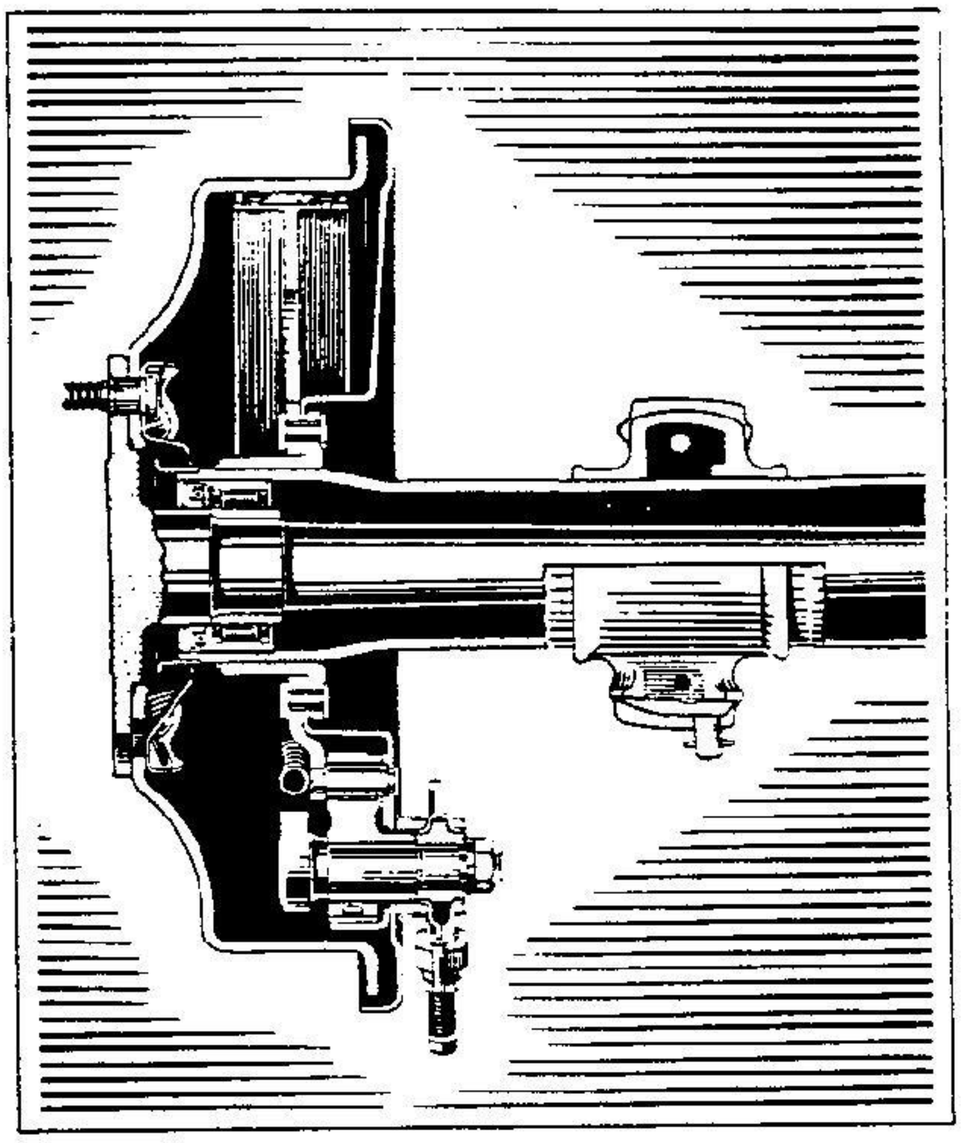

COMPARATIVE SPECIFICATIONS

	1932	1933
Axle housing overall length	49 1/2	55 5/16
Banjo outside diameter	11 1/16	11 5/16
Banjo reinforcement	1/8 separate	5/32 integral
Brake flange	Malleable iron	Pressed steel
Differential case	2 piece	1 piece
Differential bearing span	5 23/32	6 7/32
Differential case flange diameter	7 1/4	7 7/16
Differential case ribbing	4 radial	4 radial, 4 lateral
Differential pinion pitch diameter	2.100	2.216
Differential pinion bearing length	.910	.965
Differential gear pitch diameter	3.360	3.545
Differential carrier bolt circle	9 11/16	9 13/16
Differential carrier flange diameter	10 7/16	10 3/4
Differential carrier ribbing	4 radial	8 warped radial and lateral
Ring gear and pinion diametral pitch	4.373	3.947
Teeth in gear	41	37
Teeth in pinion	10	9
Gear ratio	4.100 : 1	4.111 : 1
Rear pinion bearing type	Radial	Pre-loaded radial
Bore	1.378	1.574
Number and diameter of balls	11 - 17/32 diameter	14 - 7/16 diameter
Pinion bearing spacer	Loose	Integral
Ring gear rivet circle	6 1/16	6 5/32
Number of ring gear rivets	10	12
Axle shaft design	Tapered spindle	Hub forged integral
Wheel bearing	New Departure Ball	Hyatt Roller
Wheel bearing oil seal	Felt	Leather with coil spring

BRAKES

The 1933 front and rear brakes are enlarged and reproportioned to provide deceleration in line with the increased performance of the engine. The same principles on which the highly efficient brakes of the past three years were based also form the basis for the new, larger brakes. The drums have an inside diameter of 12 inches and are wider to provide ample contact area for the new, wider linings. The increased diameter acts as a longer and more efficient lever arm at the end of which the frictional load is applied to the drum. The linings are wider and longer, the additional material being so disposed as to make the brakes more effective and to prolong the lining life. The rigidity of the drums is increased by the

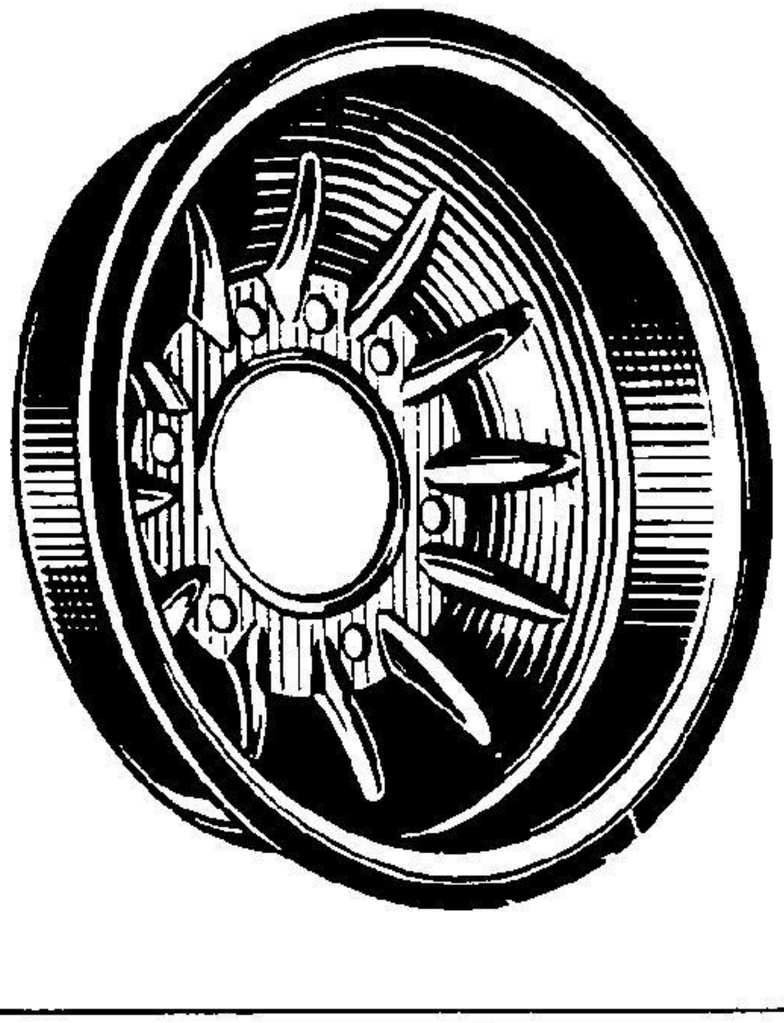

addition of twelve radial reinforcing ribs. While the actuating cam retains the same contour, its integral shaft is lengthened to provide a greater bearing length.

The webs of all brake shoes as well as the bearing plates on the long shoes are thicker. This provides increased area at the fulcrum points, reducing wear to a minimum. The anchor links are strengthened by the addition of flanges turned up along their sides.

Cocking of the shoes and the resultant noise are eliminated by the use of springs which exert a direct pull and by guides of heavier gauge. A single leaf spring inserted between each long shoe and its outer guide exerts pressure against the shoe to insure its

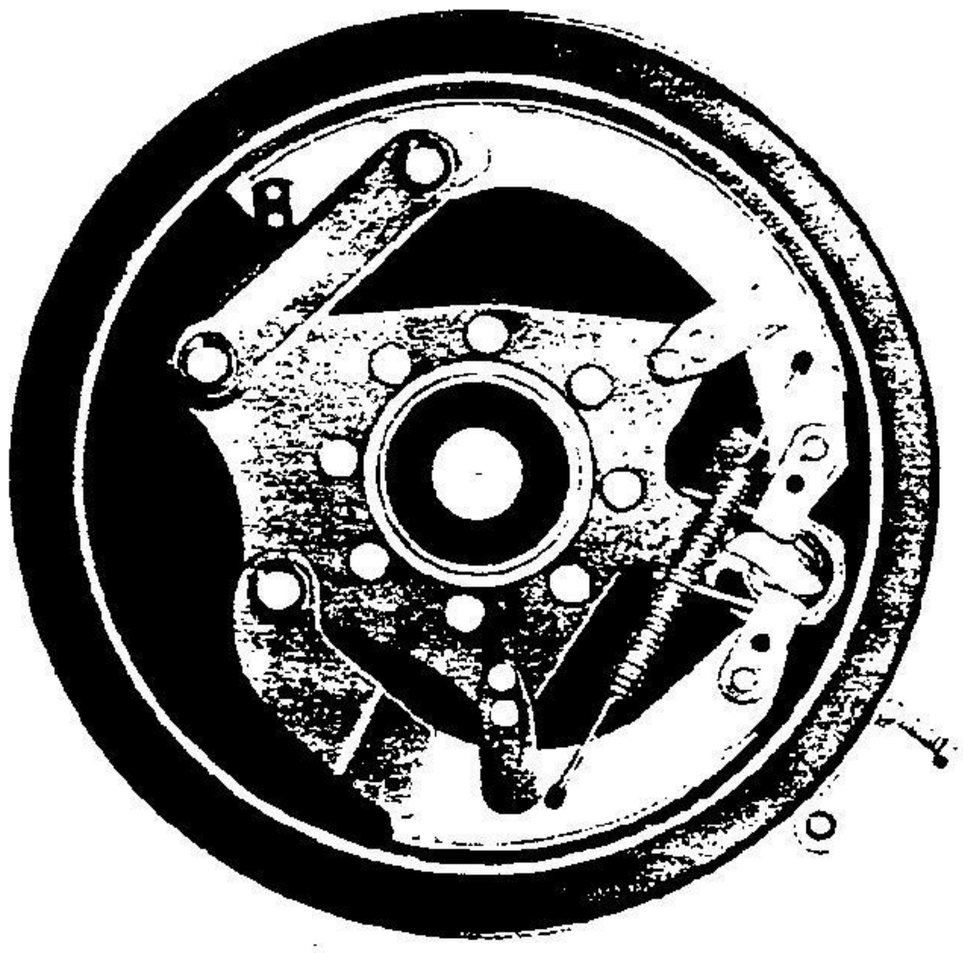

smooth movement between the guides. This eliminates squealing which might be caused by looseness at these points.

With the new brake design the separate parking brake shoes on the rear axle are eliminated. By means of a "cut-in" system of linkage, both the front and rear brakes may be operated by either the foot pedal or the hand brake lever by the same type of action. This linkage is designed to conform to the "Hoover Code", and it is so arranged that no part which is subject to failure is common to both means of operation. The service brake cross shaft is larger in diameter at the middle and is flexibly mounted on the frame as heretofore. An additional forged lever is permanently pinned to the service brake cross shaft to provide the interconnection for operation of the service brakes by the hand brake lever. A separate cross shaft for the hand brake connections is mounted on the transmission support cross member. It is located just back of the ser-

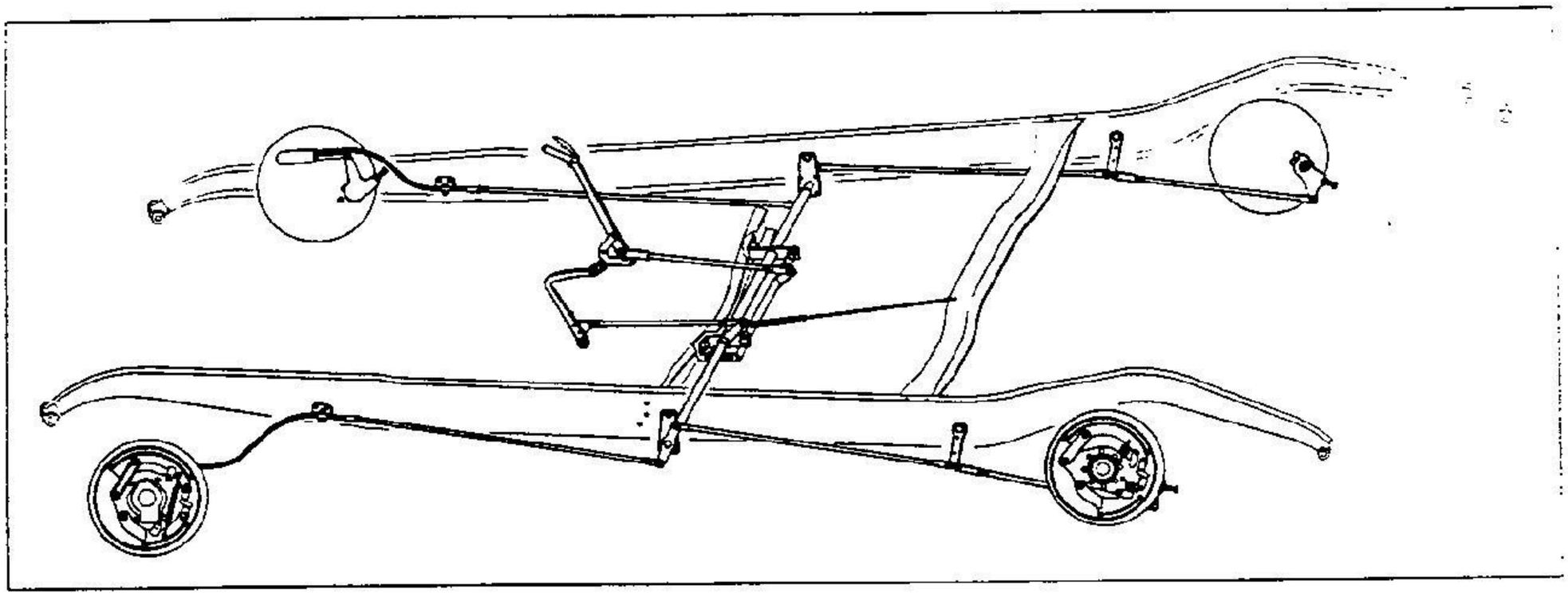

vice brake shaft. The hand brake cross shaft is 7/8 in diameter and has the lever which connects to the hand lever securely butt welded to it, while the forged interconnecting lever is permanently pinned thru the shaft. The interconnection between the levers on the two shafts is effected by means of two sturdy stamped links, one on each side of the levers. A slot is provided in each link at the rear where the lever on the hand brake shaft engages. This permits the application of the brakes by the foot pedal without causing movement of the hand lever. Springs on the clevis pins upon which these links turn, prevent rattling. The clevis which connects to the foot pedal has an elongated slot to permit further application of the brakes by the hand lever beyond any point at which the pedal may be set. The hand brake sector is provided with an additional notch to permit this increased travel. With this arrangement, additional braking beyond the range of pedal movement is always available.

The hand brake lever is improved by the addition of a rubber spacer between the handle on the brake lever and the ratchet grip. This spacer exerts pressure at this point, placing the lever, grip and spring under sufficient pressure to prevent rattles and squeaks.

Greased wicks are held between the two halves of the stamped braces to provide lubrication for the hand brake cross shaft. The outer operating lever which transmits power to the brakes is stiffened at the lower end which connects the front brakes.

COMPARATIVE SPECIFICATIONS

	1932	1933
Brake drum inside diameter	11 1/2	12
Brake drum flange diameter	13 5/16	13 13/16
Brake lining width	1 1/2	1 3/4
Overall length of short linings	5 29/32	6 3/16
Overall length of long linings	11 21/32	12 5/32
Service brake lining area per brake	26.35 sq.in.	32.10 sq.in.
Total service brake lining area	105.4 sq.in.	128.4 sq.in.
Parking brakes	Separate	Cut-in
Brake shoe web thickness	1/8	3/16
Bearing plate thickness	3/32	5/32
Anchor link section	Flat	Channel
Brake shoe guide thickness	5/32	3/16
Service brake cross shaft diameter	15/16	1 1/8
Number of hand brake cross shafts	3	1
Hand brake lever anti-rattle spacer	None	Rubber
Notches in hand brake sector	6	7

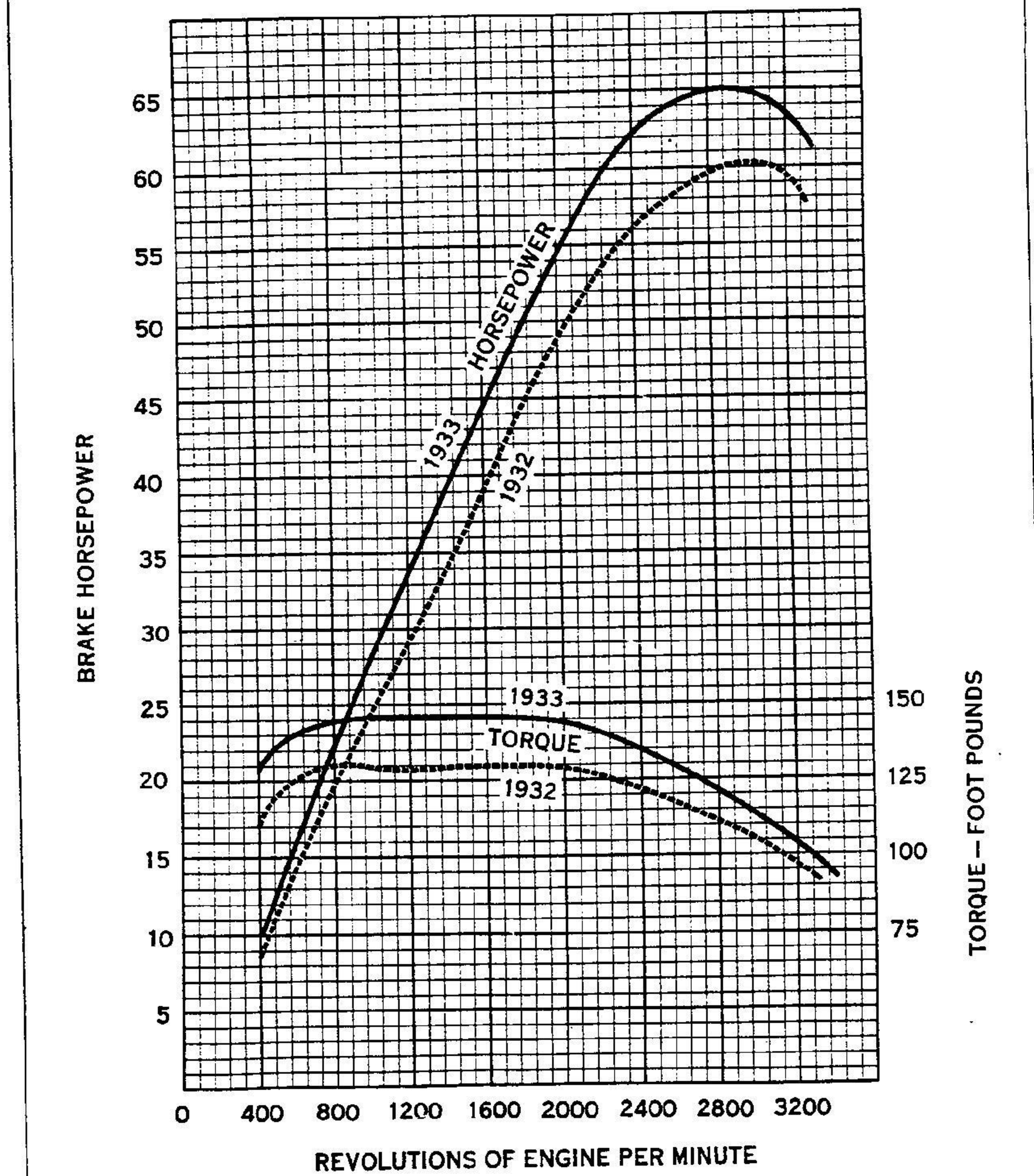

COMPARISON OF POWER AND TORQUE

ENGINE

The 1933 Chevrolet engine is more powerful and operates with greater smoothness and economy. These important improvements are the result of careful research and development extending over a period of more than two years. Each detail which contributes to the engine's improved operation and performance is proved by thousands of miles of road test and by hundreds of hours of work in the laboratory. This remarkable unit is not new, but is a further refinement of the sturdy Chevrolet six-cylinder engine which has given more than three million owners perfect satisfaction for many thousands of miles.

The 3 5/16 bore is retained while the stroke is stepped up to 4 inches, an increase of 1/4 inch. This increases the piston displacement to 206.8 cubic inches. The horsepower thruout the speed range is increased by more than 10 percent, the maximum of 65 horsepower being developed at 2800 revolutions per minute. At 1000 R.P.M. 28 horsepower is delivered, increasing to 55 horsepower at 2000 R.P.M. The torque, of course, is also increased thruout the speed range, reaching a maximum of 146 foot-pounds at 1000 R.P.M. This increase in power improves the car performance at top speed, in acceleration and in hill-climbing ability.

While the power characteristics of this engine are remarkable, more outstanding features are its smoothness, quietness and low fuel consumption.

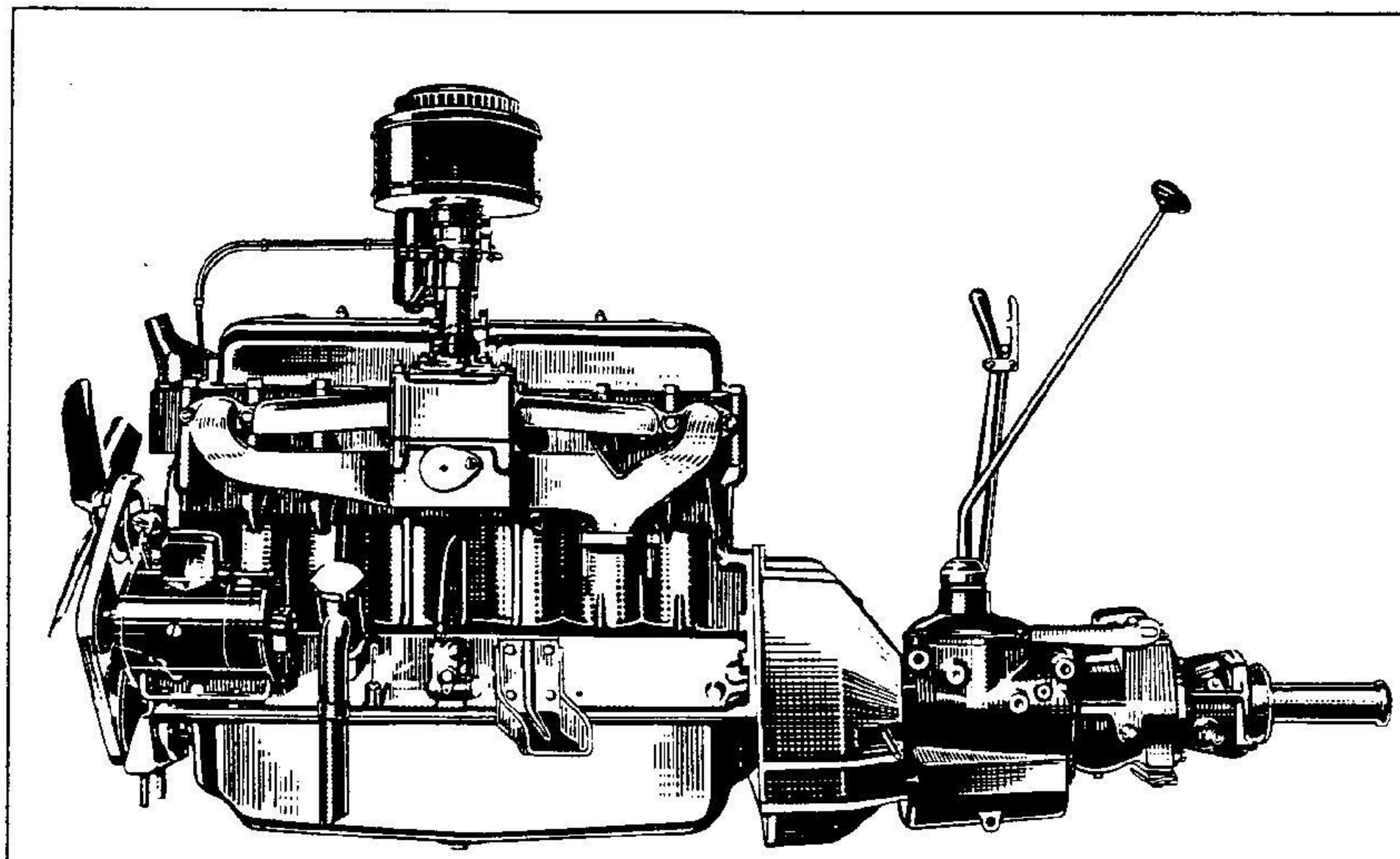

CYLINDER AND CRANKCASE

The cylinder and crankcase is higher and wider to accommodate the increased stroke. The increase in height amounts to 5/8, although the crank stroke is only 1/4 longer. The additional height is utilized to provide ample clearances, and to provide for longer connecting rods which contribute to smoother operation. The right side wall of the crankcase is increased in thickness 1/32 with an additional 1/16 of thickness for a distance each side of the distributor boss. The left side wall is moved outward 1/8 at

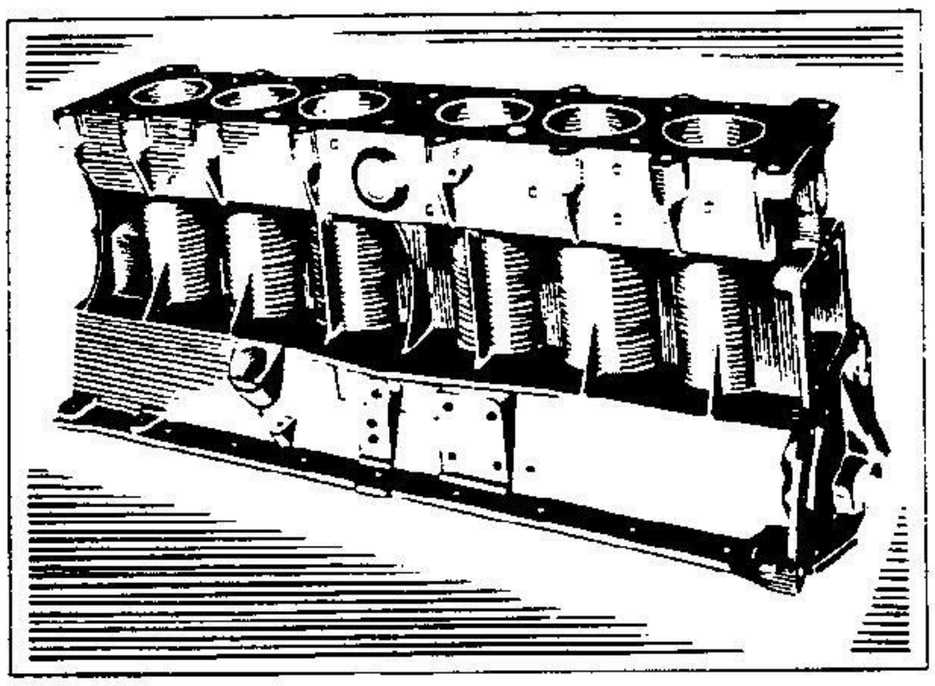

the bottom to provide crank clearance. The camshaft is raised to clear the crankshaft and connecting rods. This, of course, increases the timing gear center distance.

A steel-backed, babbitt-lined bushing is provided for the center camshaft bearing. It is cylindrical in form with a single split. It is pressed into the crankcase and staked into a slot provided to prevent rotation and endwise movement. It is carefully reamed, and is provided with slots register-

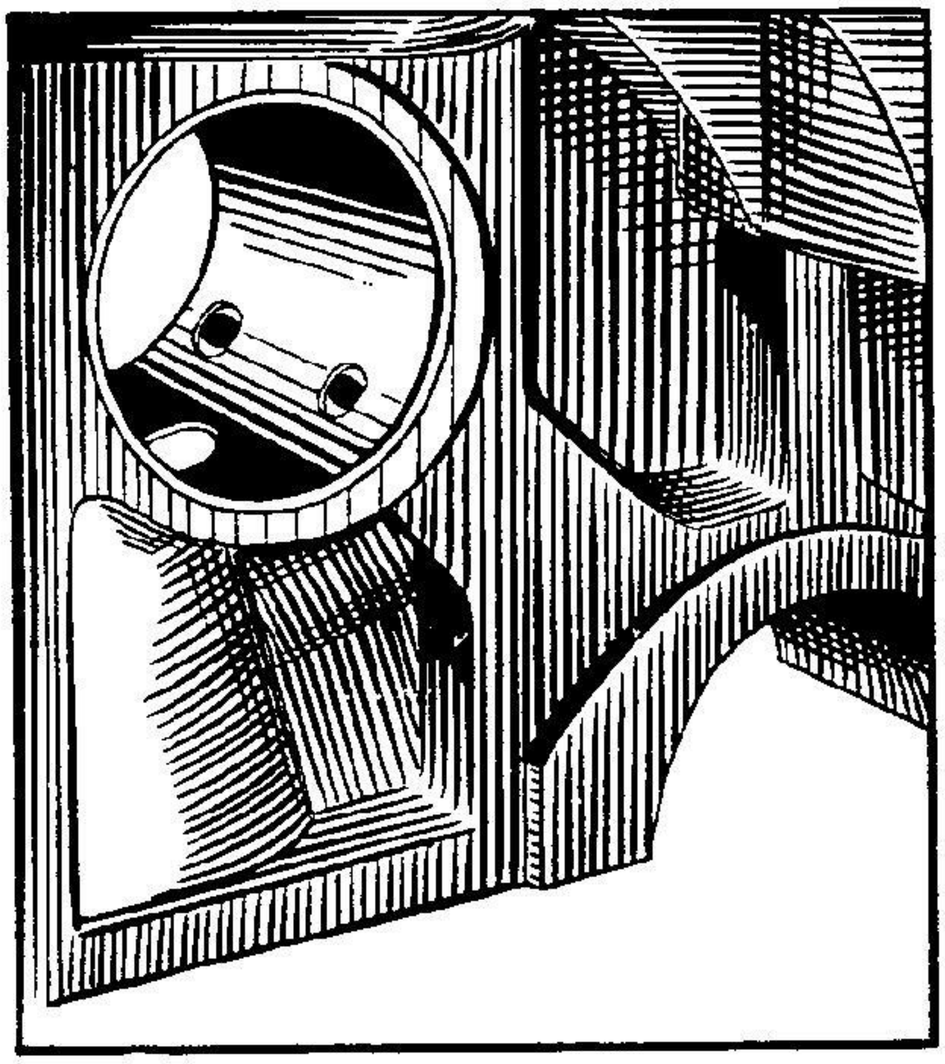

ing with the oil leads which provide lubrication under pressure from the main bearings.

In addition to these improvements in design and construction, many minor changes, incidental to the adoption of other features, are incorporated in the cylinder and crankcase.

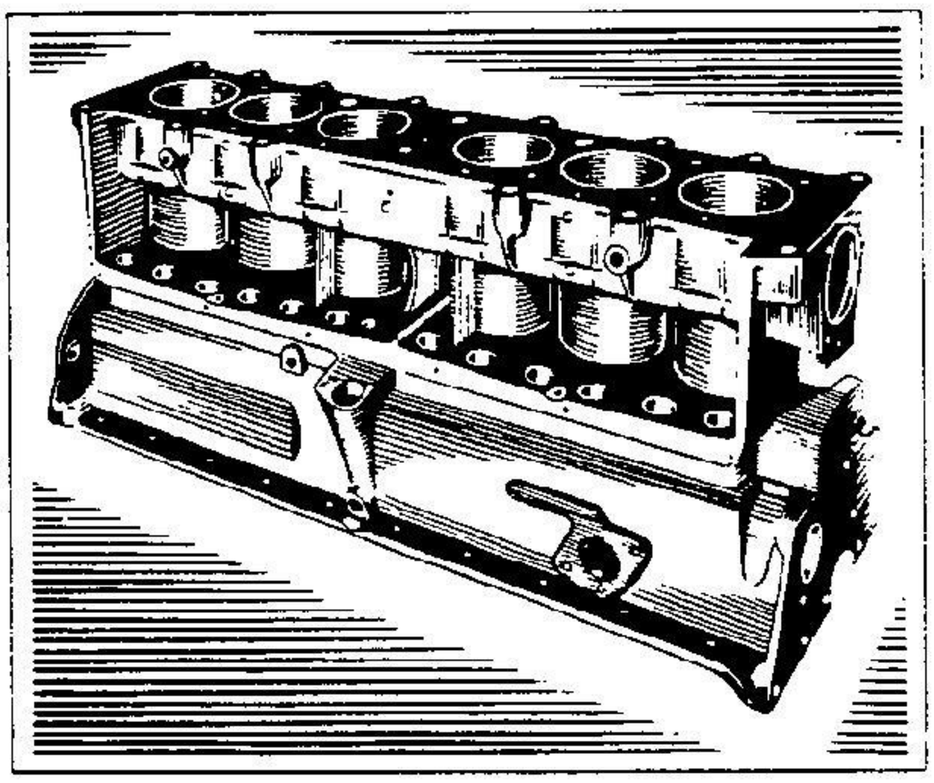

CRANKSHAFT

The heavier, stiffer crankshaft contributes largely to the increased smoothness of the engine. The counterweights are heavier because of their increased thickness, width and outside radius. Their moment arms are much more effective in counteracting the unbalanced centrifugal forces set up in the engine, because nearly all of the additional weight is located at a greater distance from the center. The long and short crank arms are also increased in width and thickness. The necessary space for this additional metal is obtained by a reduction of 1/8 in the width of the center main bearing and crank pins. The diameter of the crank pins is increased by 1/8. The finished shaft weighs 63 1/2 pounds. The additional weight, the heavier arms, and the larger diameter of the pins combine to produce a crankshaft which is very rigid and subject to very small deflections under load, insuring long bearing life and exceptionally smooth operation.

By the exercise of greater care in balancing, the maximum static out-of-balance of each end of the crankshaft is maintained below 1/2 ounce inch. Furthermore, the dynamic unbalance of the crankshaft is entirely eliminated. This is accomplished by main-

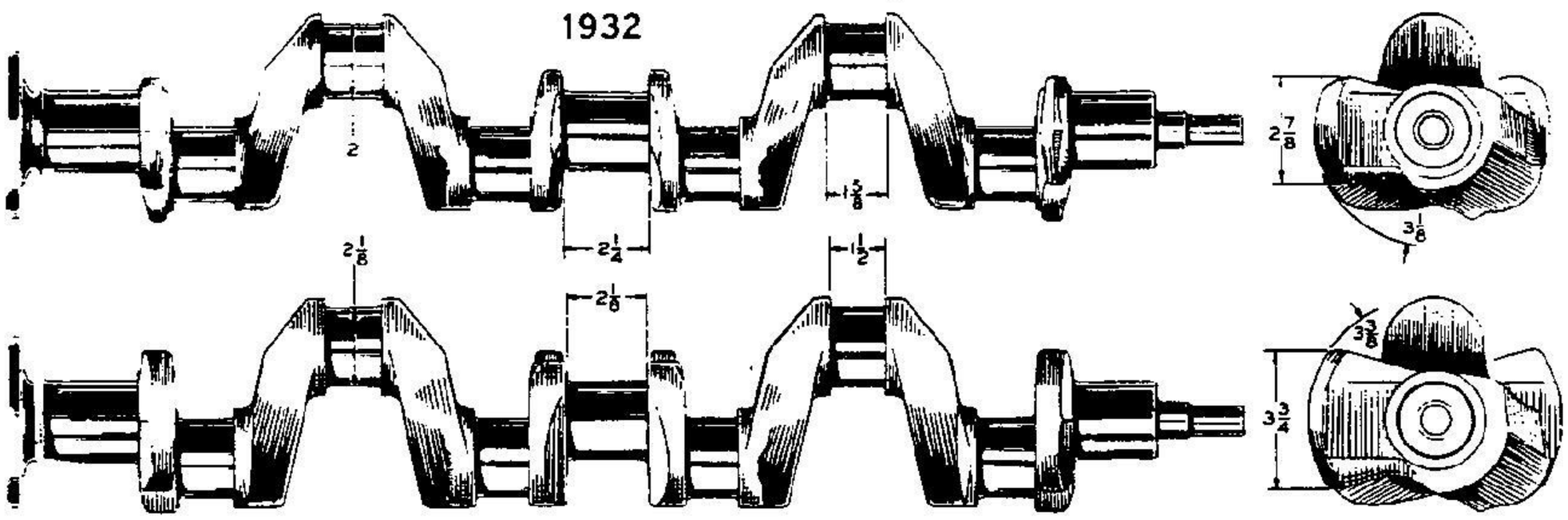

1933

taining the static unbalance of each end in the same plane, which eliminates the multiplication of the forces thru the leverage of the crankshaft length.

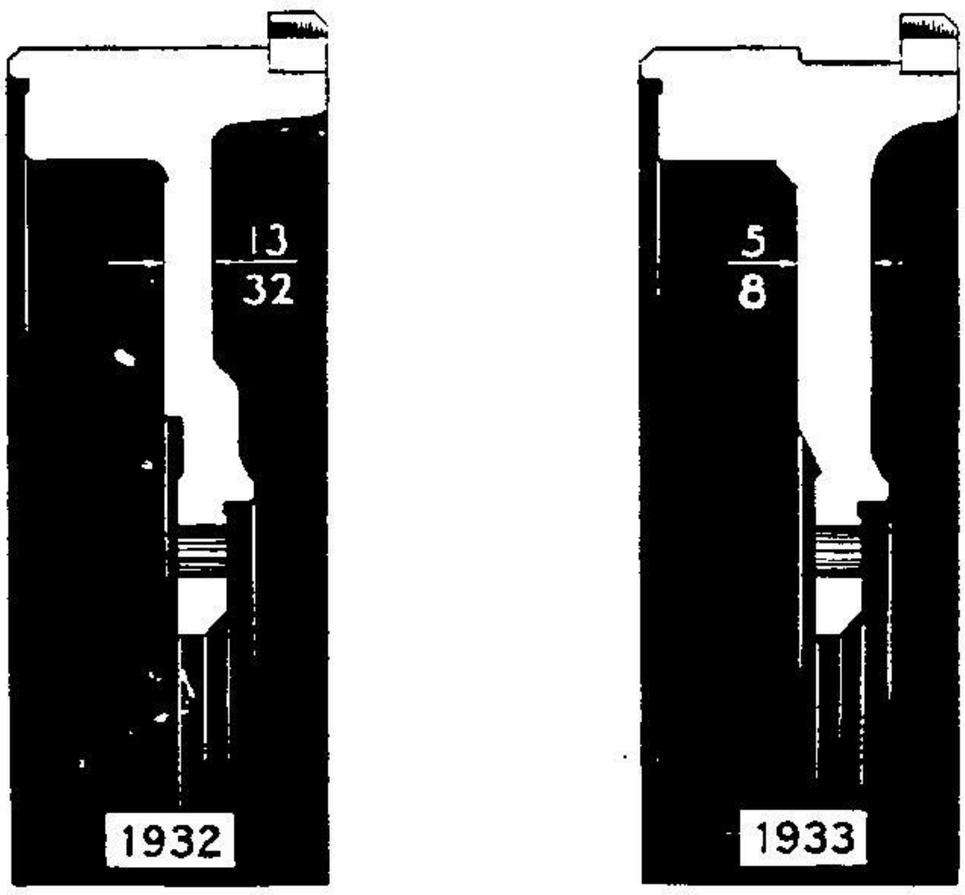

During the 1932 season the flywheel and its method of attachment to the crankshaft have been improved. The flywheel web was increased in thickness 7/32. It is now blended more gradually into the greater volume of the rim section and the thinner center portion. This more gradual blending provides an adequate section thru which heat, that may be generated by clutch friction, is transferred rapidly into the rim section where it is quickly dissipated into the surrounding air. This relieves the flywheel of strains due to heat, and prevents breakage. The diameter of the rim is reduced slightly to compensate for the increased weight in the web, maintaining the same flywheel effect.

In addition to the single plain dowel which locates and drives the flywheel, the four cylindrical nuts are lengthened to engage corresponding counterbored holes in the flywheel. This provides a five dowel drive instead of the previous design in which the drive was taken by a single dowel and four bolts. The bolt heads are enlarged to provide adequate bearing surface.

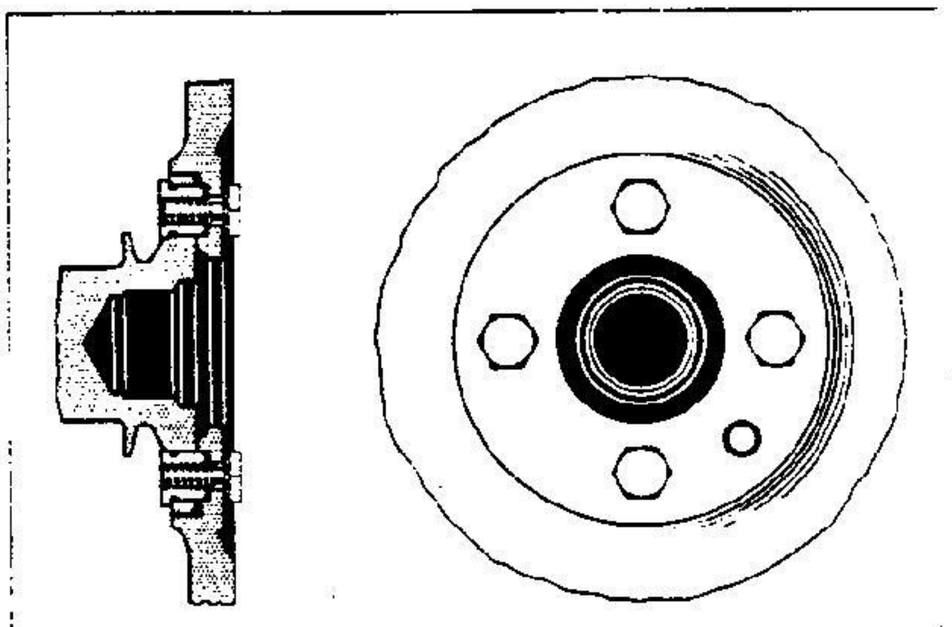

The flywheel is balanced to much closer limits, the total permissible out-of-balance being 1/2 inch ounce.

HARMONIC BALANCER

Another important factor which contributes largely to the smooth operation of the engine is the heavier harmonic balancer. The fly weight is larger in diameter and considerably heavier. A greater number of leaf springs of lighter gauge and greater width give adequate resistance to the movement of

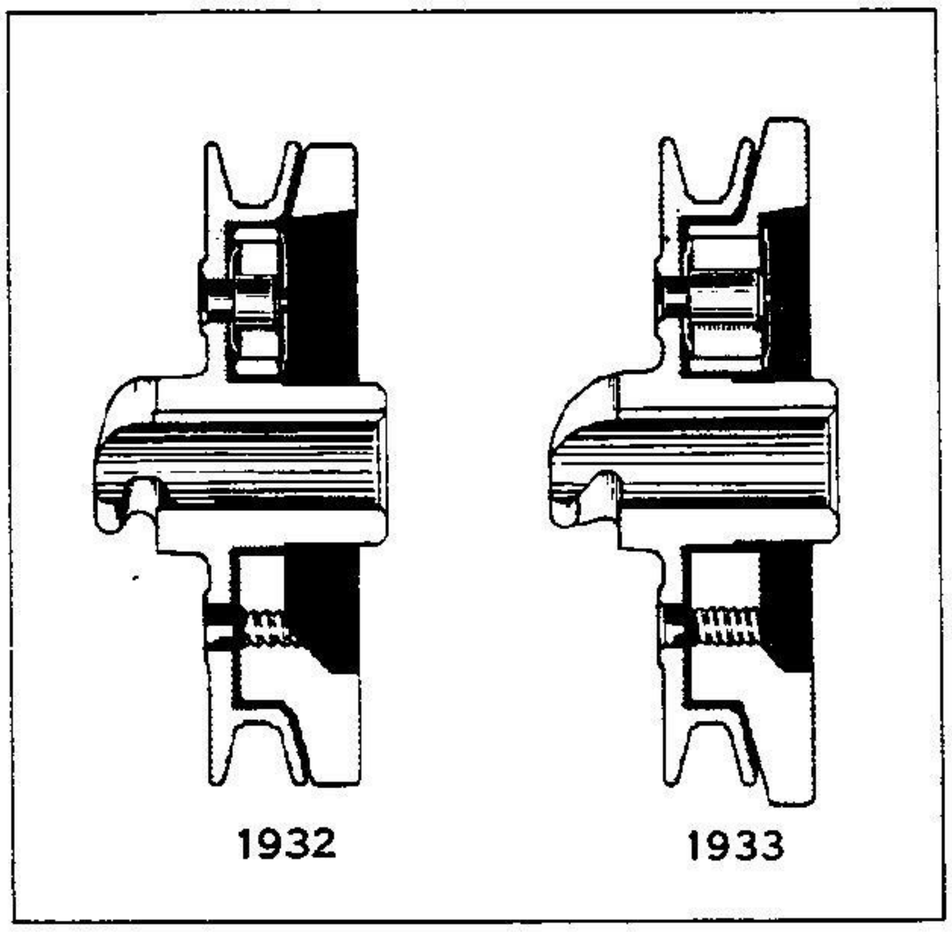

the heavier weight. The increase in the size of these parts allows more advantageous disposal of the metal in the weight, permitting it to be made of cast iron instead of malleable iron as heretofore.

The harmonic balancer unit is tuned to 135 - 150 cycles per second to reduce the amplitude of the natural frequency of the crankshaft.

CONNECTING ROD

The connecting rod length is increased to 7 1/2 inches to provide for the longer stroke and to maintain smooth operation. The metal at the base of the rod is disposed more advantageously to provide a gradual blending from the I section to the heavy portion of the rod surrounding the upper half of the bearing. This is made possible by a new design of bolt which permits milling the flat on the connecting rod at a greater distance from the center. With the new bolt design, the rod is counterbored to clear the head, producing a local spot at which the rod section is reduced instead of a continuous reduced section as heretofore. The bolt head is sheared to a double cylindrical diameter with short flats between, providing two points of engagement at a considerable distance from the center, to prevent rotation of the bolt. This improved design relieves any possible strains and deflections of the rod, which might cause cracks in the bearing. The connecting rod bearings are larger in diameter and slightly narrower. They are of

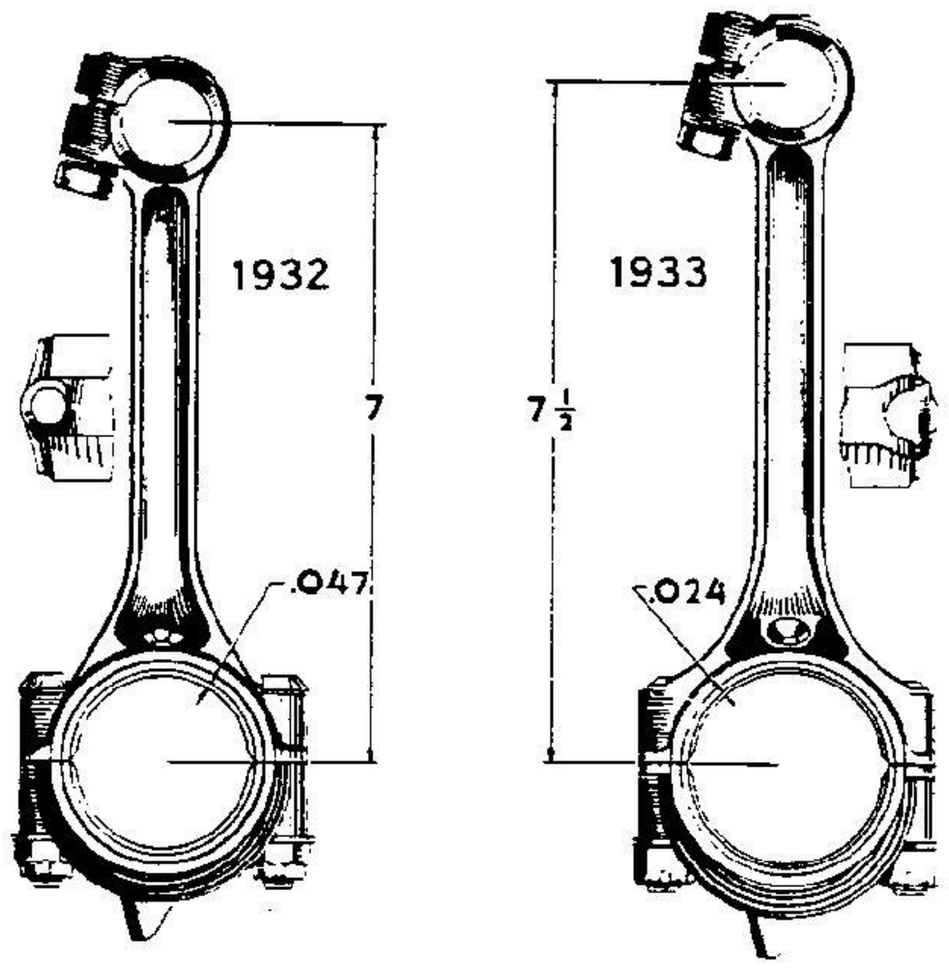

high grade babbitt, centrifugally cast, and bored to close limits. The babbitt is thinner to insure more efficient conduction of heat from the bearing surfaces.

The entire machining line-up of the connecting rod is such as to eliminate any straightening operations between the boring operations. The effect of this improvement in manufacture is to produce rods which will retain their original alignment for a considerably longer time.

PISTON

The piston is redesigned to provide more adequate oil control on the cylinder walls and to permit the equalization of the weight of all pistons. The improved oil control is effected by an increase in the number of oil return holes from 8 to 12. A ring is pro-

vided at the bottom of the piston in which excess stock is left for a machining operation which equalizes the weight of all pistons within 1/8 ounce.

The width of the oil control piston ring is increased to 3/16, increasing the life of the ring by providing a greater width of lands where they contact the cylinder bore. The increased width also renders the oil control rings less susceptible to breakage in handling.

CYLINDER HEAD

The cylinder head is redesigned to provide a larger combustion chamber to maintain the compression ratio of 5.20 with the larger displacement. This necessitates an increase in height with which are combined many pattern changes to facilitate casting of this part. Ribs are added between the rocker shaft support bosses and the bosses surrounding the push rod holes to increase the strength and rigidity of the cylinder head roof, and to prevent excessive deflection due to pressure imposed by the rocker arm action. This change tends to maintain valve adjustment for a longer period.

The width of the valve seats is reduced. This reduction results in a small seat surface with a correspondingly higher unit pressure, insuring a better seal and longer intervals between valve grindings.

The spark plug is reduced in size and is repositioned so that the electrodes are at the edge of the combustion chamber. This prevents the trapping of dead exhaust gas around the electrodes, and results in smoother combustion and reduced fuel consumption. The spark gap is increased to a minimum of .030 to insure smooth idle performance and smooth operation under leaner road load driving conditions. A hollow copper gasket under the spark plug body assures a more leak-proof joint and better heat conductivity.

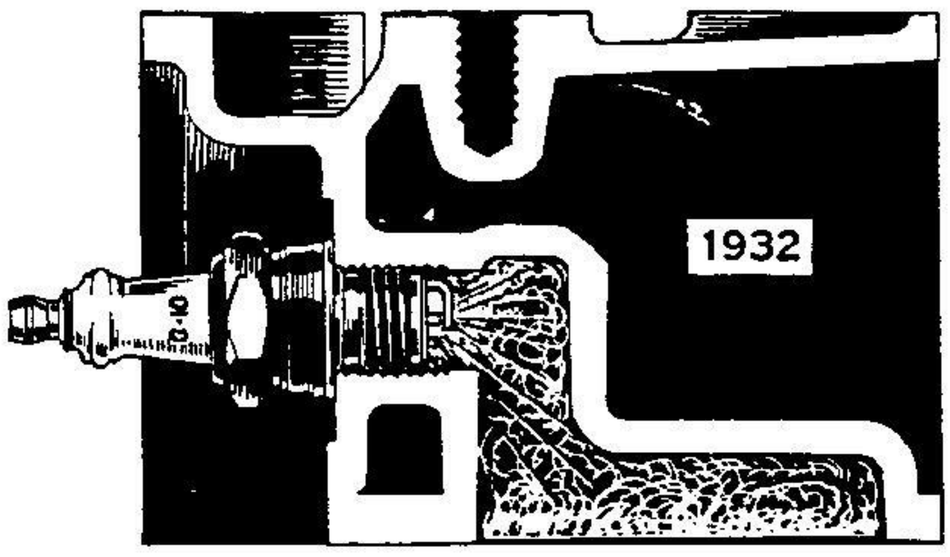

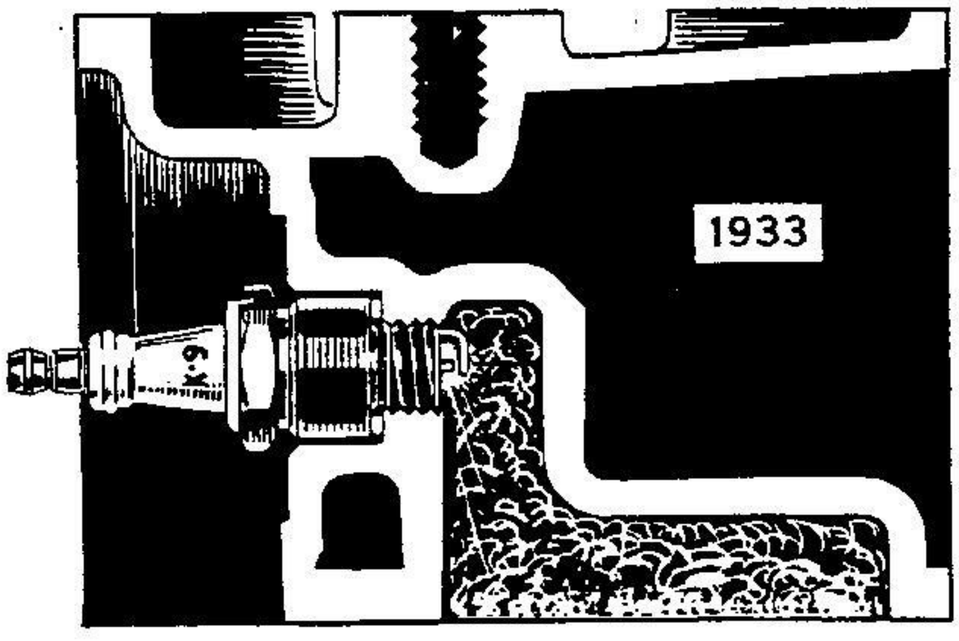

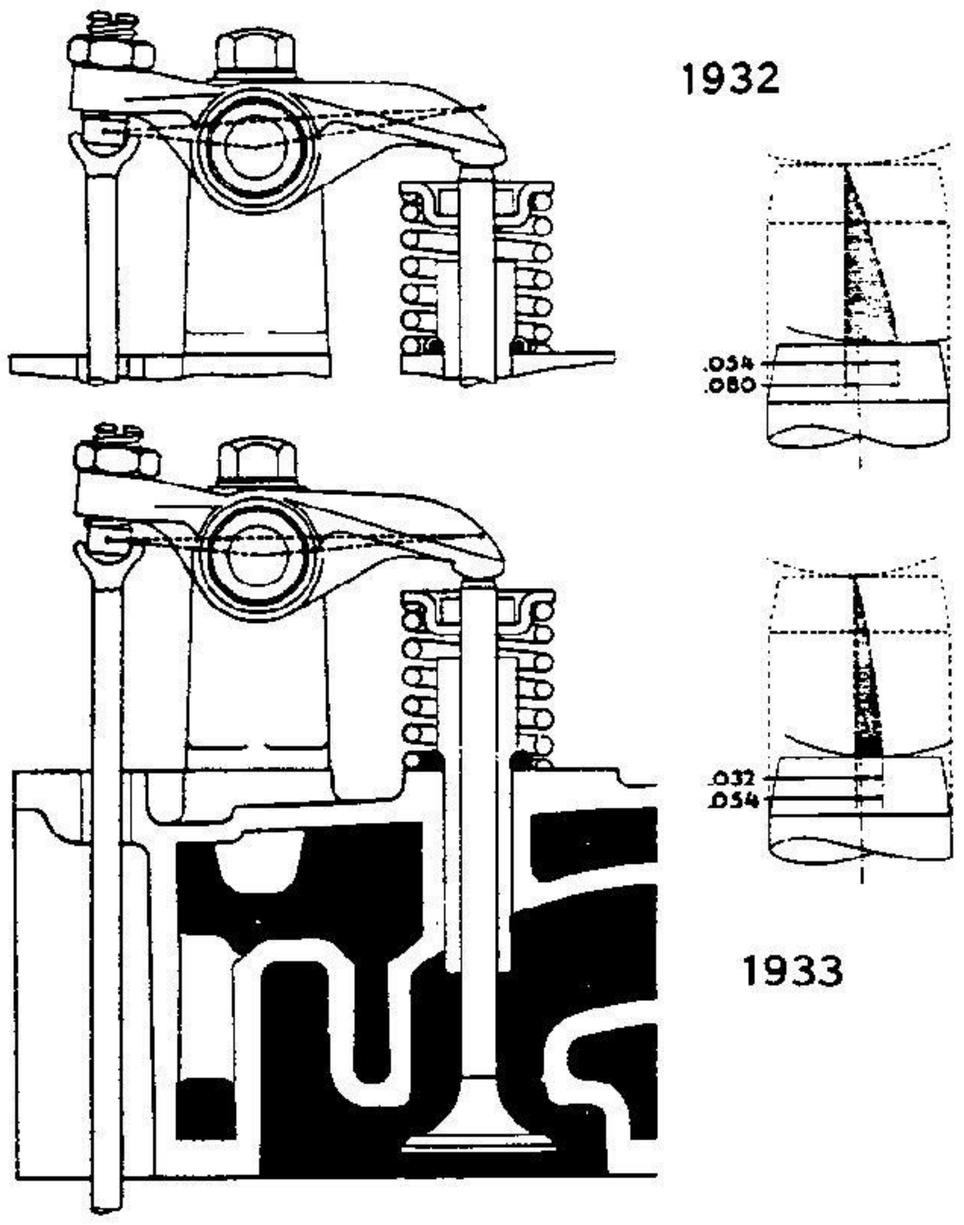

The operation of the valve mechanism is improved by a revision of the rocker arm geometry. By the introduction of slight changes

in the dimensions of the rocker arm, the contact area between the end of the valve stem and the cylindrical foot on the rocker arm is concentrated considerably closer to the center of the stem. The reduction in the cylindrical radius on the end of the arm also contributes to this improvement. This reduces the side thrust of the valve stem in its guide, reducing wear to a minimum.

The ribbing of the rocker arm is redesigned to increase its stiffness and to insure adequate clearance over the valve spring cup. The rocker arm bushing is changed from a split hard rolled bronze bushing to a solid cast bronze bushing. The depth of the groove is increased to insure adequate lubrication.

The valve spring is of the same anti-vibration design of previous models with an increase in pressure consistent with the increase in car speed. It is highly desirable to keep the weight of the reciprocating valve parts as low as possible. To this end, the weight of the valve tappets is reduced by a decrease in the thickness of their walls. To insure proper lubrication of the overhead valve mechanism, it is necessary that the oil be distributed uniformly to the front and rear rocker shafts and that a proper feed be provided from the shaft to the rocker arms. Also, it is essential that a supply of oil be available to the operating parts at relatively low engine speeds, and that a proper control be provided to prevent over-oiling at high engine speeds. Provisions to adequately meet these requirements are made in the 1933 engine. The restriction in the sleeve leading to the rear rocker shaft prevents over-oiling caused by the inclination of the engine in the chassis. The metering oil groove in the rocker arm bushing insures an adequate supply to each arm. The overflow pipe is an overhead loop with a vent hole near its highest point. This construction prevents oil from being returned to the crankcase before an adequate head is built up to supply the shafts. The vent hole prevents the siphoning of oil from the shafts. With this arrangement, the two hollow rocker shafts remain full of oil when the engine stops, and since this oil cannot flow out without overcoming the head of the overflow pipe, there is always a supply of oil available to the rocker arms when the engine starts. The looped overflow pipe also functions to prevent over-oiling at high engine speeds. This system is designed to give initial pressure at low engine speeds and a limited pressure at high engine speeds.

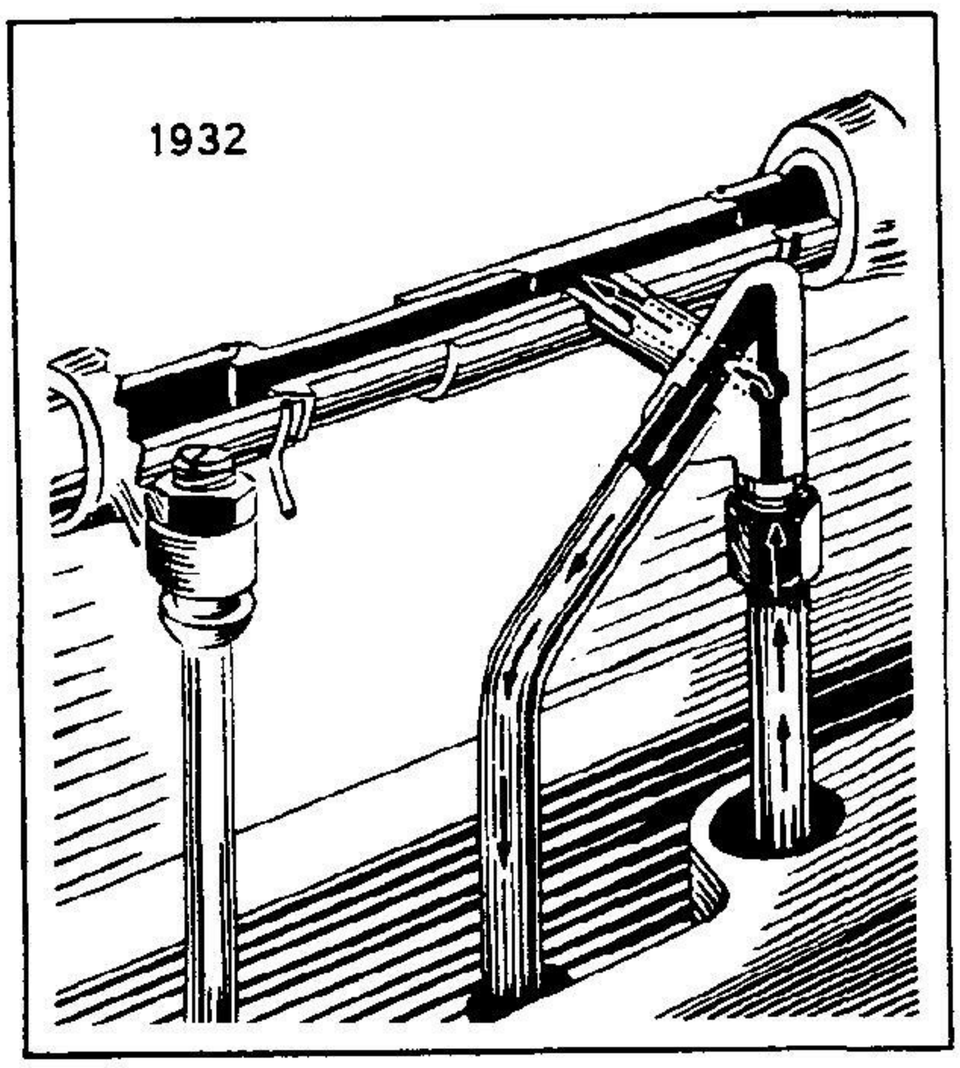

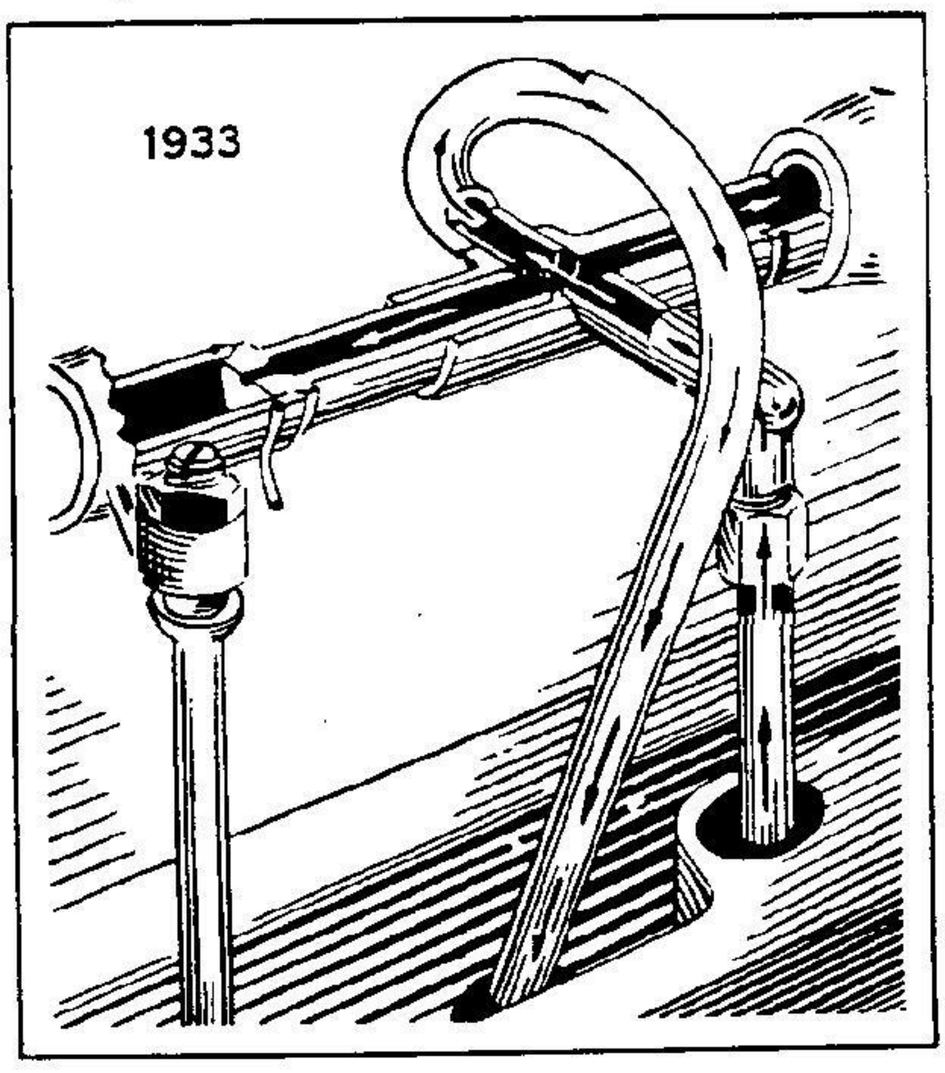

CARBURETOR AND MANIFOLDS

The entire fuel induction system is refined to insure smoother engine operation and better economy by improved distribution, heat control and carburetion. A more uniform fuel mixture ratio is maintained because of the improvements in the metering rod and its mounting. A light spring is added at the

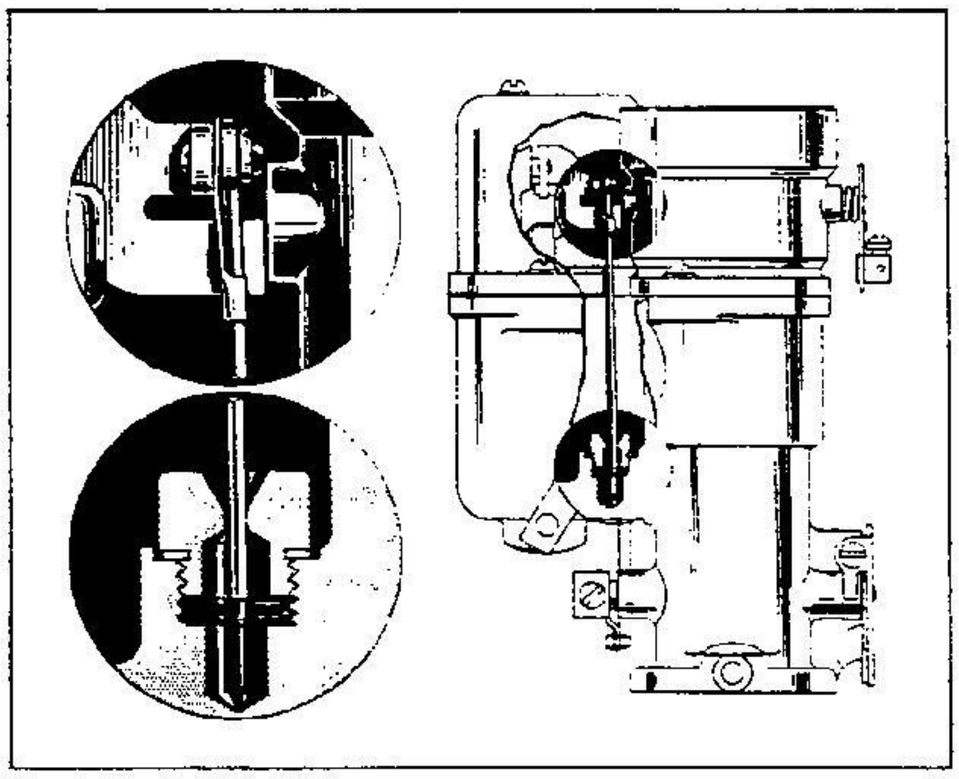

upper end of the metering rod at its point of attachment to the accelerating pump lever to restrict vibration of the rod and to hold it gently against the side of the jet orifice. This action stabilizes the mixture delivered to the engine and results in increased overall fuel economy. The lower end of the metering rod is redesigned to incorporate three steps or sizes. The largest diameter controls the mixture at low speeds; the intermediate diameter controls the mixture at medium speeds; and the small diameter controls the full throttle mixture at all car speeds where maximum power is required. In this manner the mixture is more accurately controlled, under all conditions, with a further increase in fuel economy.

The accelerating pump stroke is altered to meet the improved manifold conditions, which permit the elimination of the pump discharge beyond half throttle, thereby saving fuel. The accelerating pump now delivers fuel only when the accelerator pedal is suddenly depressed. This provides for maximum acceleration and is accomplished by the addition of a small air bleed in the top of the float chamber. This air passage is automatically closed by a small check valve whenever the accelerating pump is operated, but it is opened as soon as the accelerator becomes stationary, thus stopping the flow of fuel.

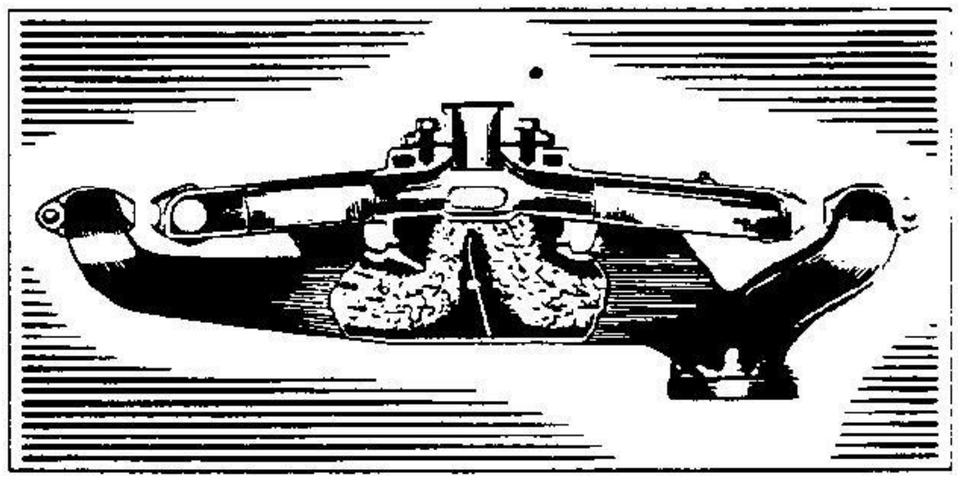

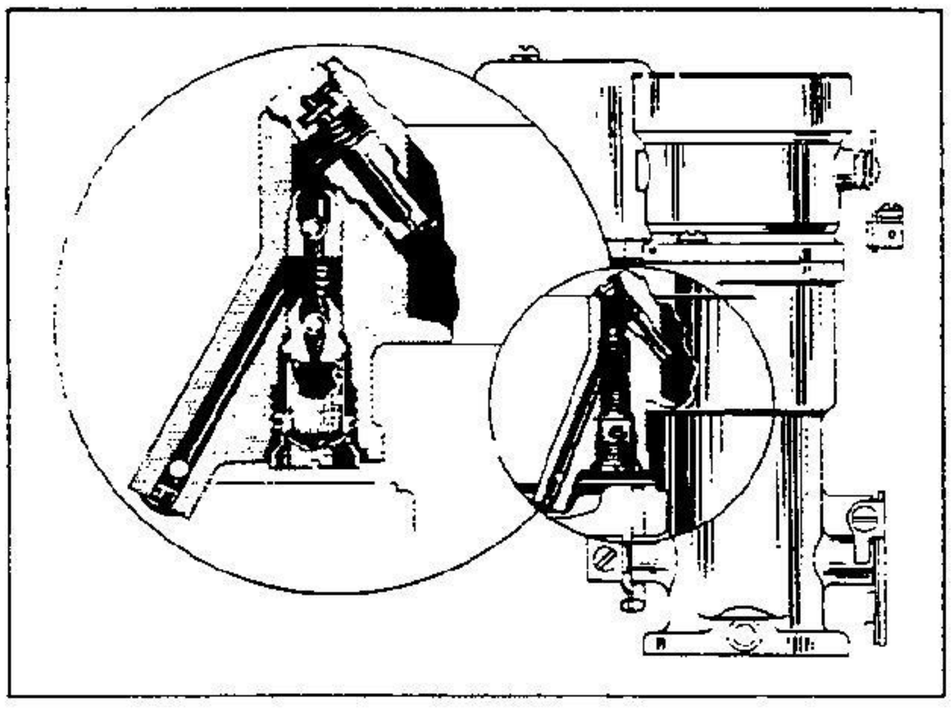

The intake manifold arms are inclined, to prevent wet gas from flowing to the rear cylinders because of the inclination of the engine in the chassis and the additional slant when climbing hills. A flat area is provided at the center of the manifold to collect the wet particles of gas which may leave the air stream and flow down the walls. This area is surrounded by a wall sufficiently high to prevent the liquid from running down the inclined arms. The splashing caused by the motion of the car, and the passage of the air stream over this "pan" picks up the wet particles and returns them into the air stream. The center port is flattened to provide for equal distribution of fuel to all ports. Each arm is of "D" section for its major length, with the flat on the bottom. This section is maintained

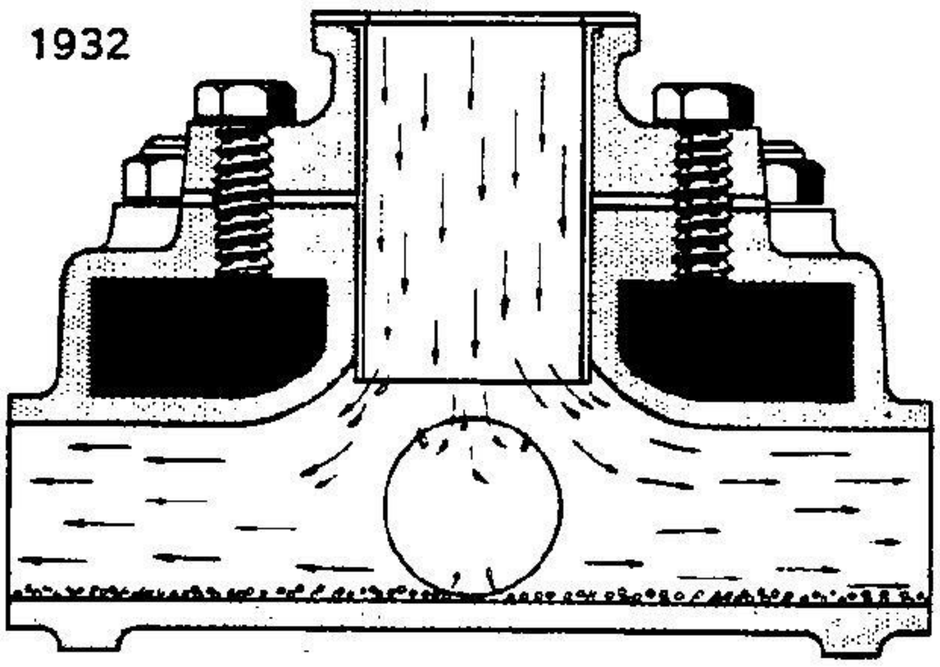

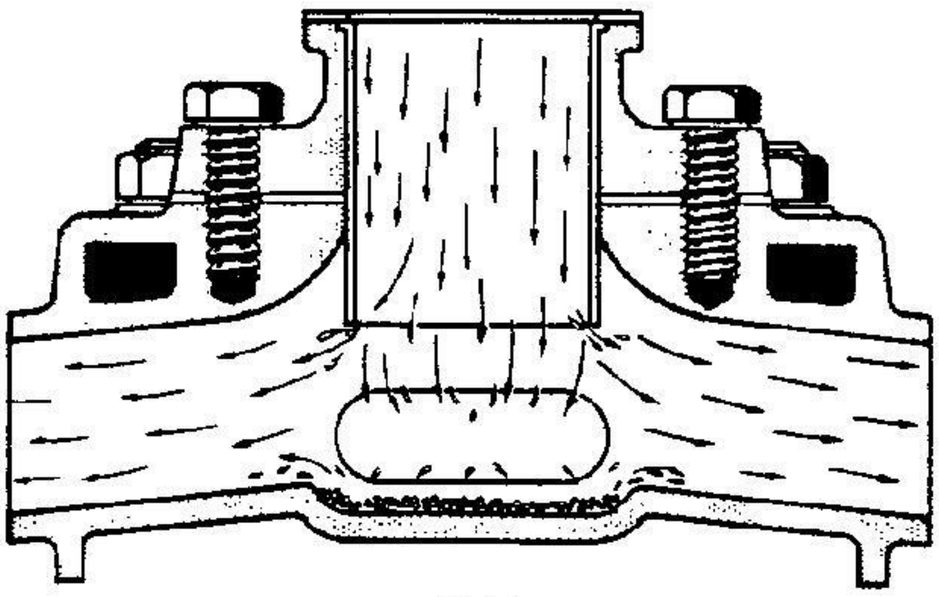

1933

from the center of the manifold to a point just beyond the elbow where the arm bends to join the cylinder head end port. At this point the "D" section blends into a round section which is continued to the termination of the arm. The flat portions of the arms, like the flat "pan" in the center of the manifold, collect any wet particles of gas which may leave the air stream, and, due to the inclination of the arms, distribute them equally to the end ports. The sleeve in the riser is in such relation to the arms and center ports as to provide proper distribution for maximum power with minimum fuel consumption.

The exhaust manifold is redesigned to insure free flow of the exhaust gases at their entrance to the exhaust pipe, to prevent warpage due to heat, and to insure automatic heating of the explosive mixture. Free flow is provided by slightly lowering the flange and by making the bends into it more gradual. This construction also permits more definite division of the arms leading from the fifth and sixth cylinders. Warpage is prevented by the addition of two sturdy ribs cast on the outside surface of the inner wall of the manifold. This elimination of warpage, in combination with the larger, steel-faced gaskets, insures more permanent leak-proof joints. The heat control valve is provided with thermostatic operation. The movement of the valve is reversed so that the exhaust

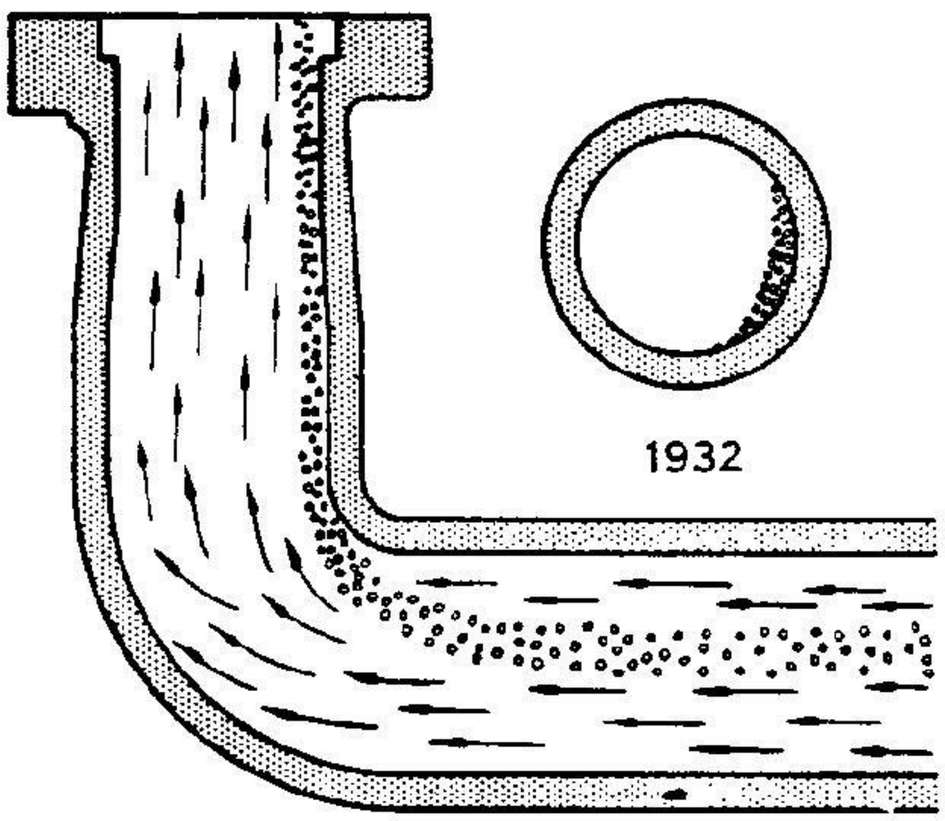

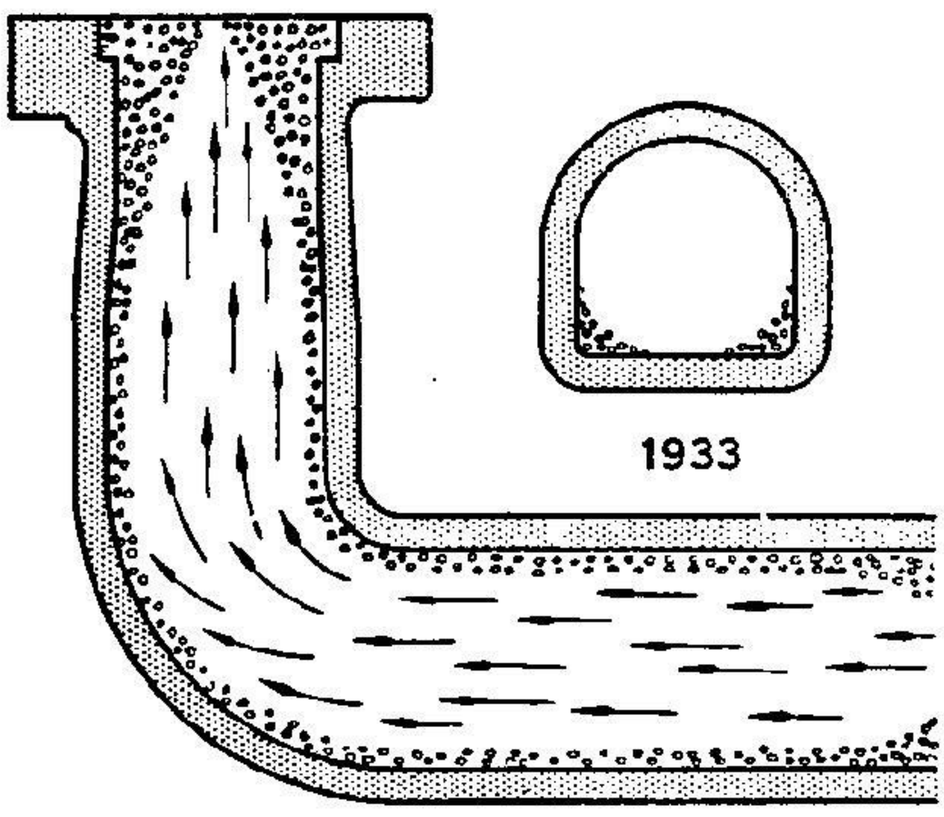

gas pressure tends to close off the passage to the intake manifold. The outer end of the heat valve shaft is slotted to receive a flat spiral thermostatic coil which holds the valve open until the temperature is sufficiently high to contract the coil. When this high temperature is attained, the return spring at the inner end of the shaft, assisted by the pressure of the exhaust gases, returns the valve to its horizontal, or closed position. When in this position, the exhaust gases are excluded from the passage to the intake manifold, and pass straight thru the exhaust manifold to the pipe. The thermostatic coil is housed in a stamped cover with large slots to permit the free passage of air over the coil. A steel disc is pressed on the shaft between the outer wall of the manifold and the thermostatic coil to prevent the flow of excessive heat directly from the manifold to the coil. A turned-over end on the coil engages the edge of one slot where it is anchored by the initial deflection of the coil. The spring on the inner end of the shaft hooks into a stamped lever with its other end anchored in such a position that it holds the valve in the "heat off" position unless the thermostat, which opposes the spring, cools, and puts heat on. This thermostatic control insures proper adjustment of the heat valve at all times in relation to engine temperature. With thermostatic heat control, the manual operations required of the driver are reduced, leaving him free to give his entire attention to the operation of the remaining controls. He is relieved of the necessity of guessing whether his engine is at the proper temperature to warrant closing the valve. The proper operating temperature of the explosive mixture, which is always insured by this thermostatic control, has a marked effect on fuel economy and smoothness of engine operation.

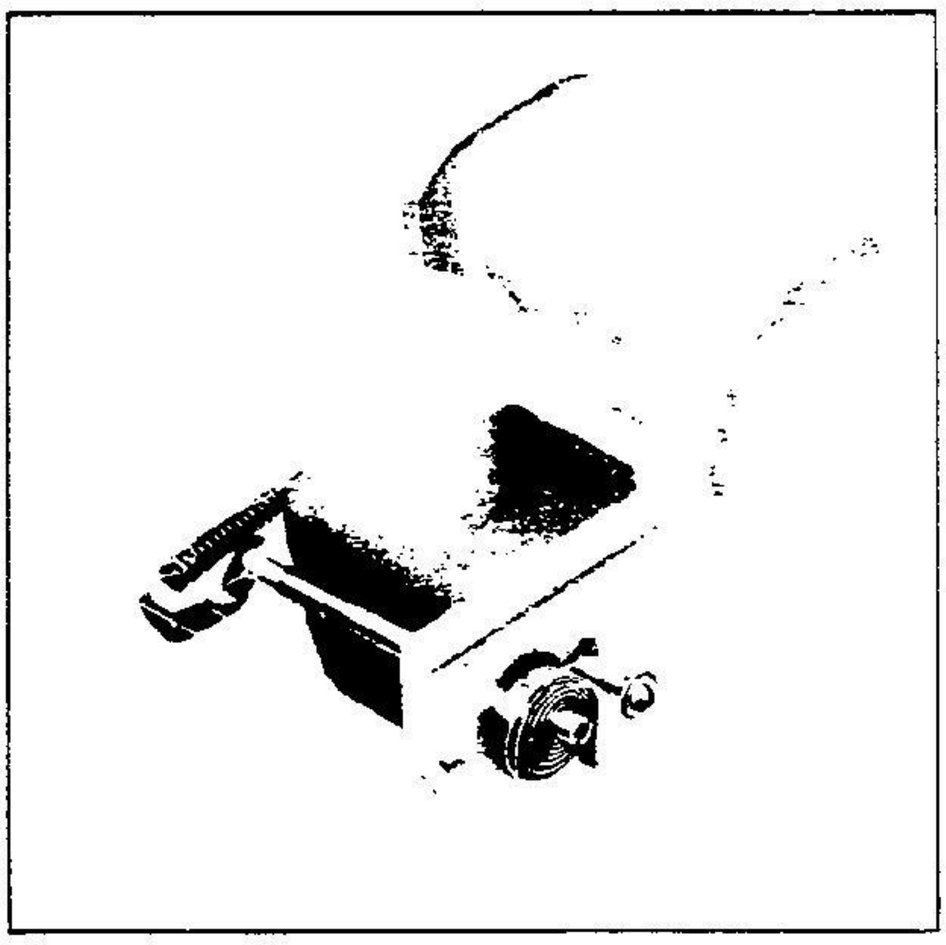

AIR CLEANER AND INTAKE SILENCER

The new, combined air cleaner, intake silencer and flame arrester is designed on the same general harmonic principle as that previously used. It is larger, stronger and more efficient to accommodate the requirements of the increased engine horsepower. It silences both the hiss of the incoming air and the roar caused by oscillation of the air column in the intake manifold. The filter element is composed of a greater amount of copper gauze upon which dust, dirt and grit are deposited, thus insuring cleaner air in the intake system. This greater amount of gauze

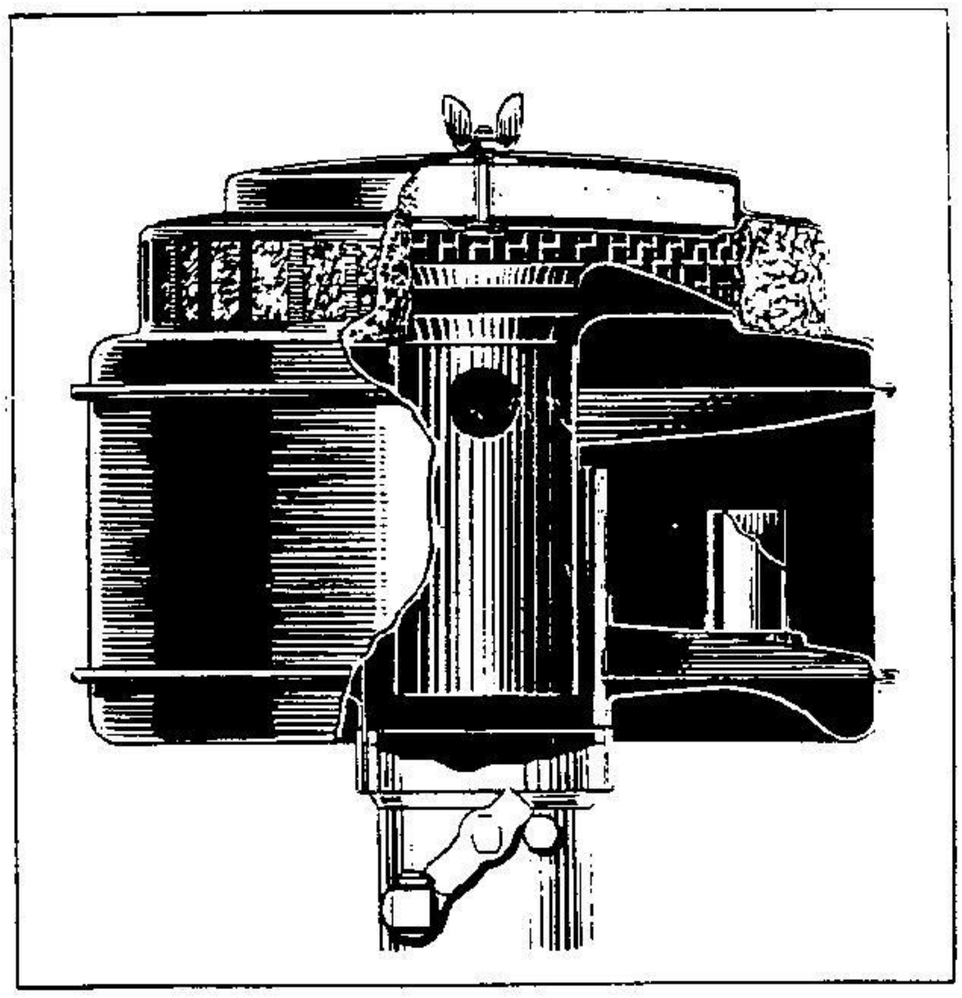

also provides greater flame arresting qualities. The resonance qualities are improved by a general redesign of the unit upon a larger scale, and by the addition of two expansion chambers, the walls of which also provide extra strength to the entire structure. One of these added chambers is located at the base of the induction chamber with an annular opening of the same diameter as the passage to the carburetor. The other is located at the top of the main body with three openings to the passage tube. The great speed at which air is drawn to the carburetor causes a hissing sound. The waves of this sound are partially absorbed by the fireproofed felt at the top of the silencer and are fully silenced by neutralizing waves set up by the vibration of the air in these two chambers.

The repeated explosions of the engine cause oscillation of the air column in the intake manifold with a resultant roar which would be extremely disagreeable were it allowed to reach the atmosphere. This noise is eliminated. Its sound waves pass between the walls of the passage tube and a tube which surrounds the passage tube to enter a large resonance chamber similar to that used in the previous model. In this chamber and in an interconnecting chamber located directly under it, counteracting sound waves are set up which completely neutralize those of the roaring noise. The volume and construction of all expansion chambers are scientifically developed to produce maximum efficiency.

VACUUM SPARK CONTROL

In addition to the automatic spark control, which is actuated by centrifugal weights in the distributor body, an additional advance control is provided. This is actuated by the vacuum in the induction system. The automatic spark advance control responds to variations in engine speed regardless of load conditions. The vacuum control, however, operates only when road load conditions are such that the throttle valve is just partly open. Thus two separate automatic controls are provided to insure nearly perfect spark advance whether the engine is operating under full throttle or part throttle conditions. With this arrangement the manual control of the spark from the driver's seat becomes unnecessary.

It will be noted from the accompanying comparative diagrams that while the automatic advance provided by the speed control mechanism is nearly ideal for full throttle operation, it falls far short of providing maximum economy at part throttle. Under this condition, as the diagrams show, the vacuum control provides additional spark advance which very nearly coincides with that required for the best economy. Thus, the two controls in combination provide the proper spark advance under all conditions of operation and insure maximum fuel economy and most satisfactory engine operation by insuring more complete combustion. The operation of the vacuum control and its manual adjustment is as follows: The advance arm, which is clamped to the distributor body, is actuated by a diaphragm to which it is connected by a rigid link. The diaphragm is rigidly mounted in relation to the crankcase. A small suction pipe connects the diaphragm chamber with the throat of the carburetor body thru a small hole just above the edge of the throttle valve. Thru this connection intake suc-

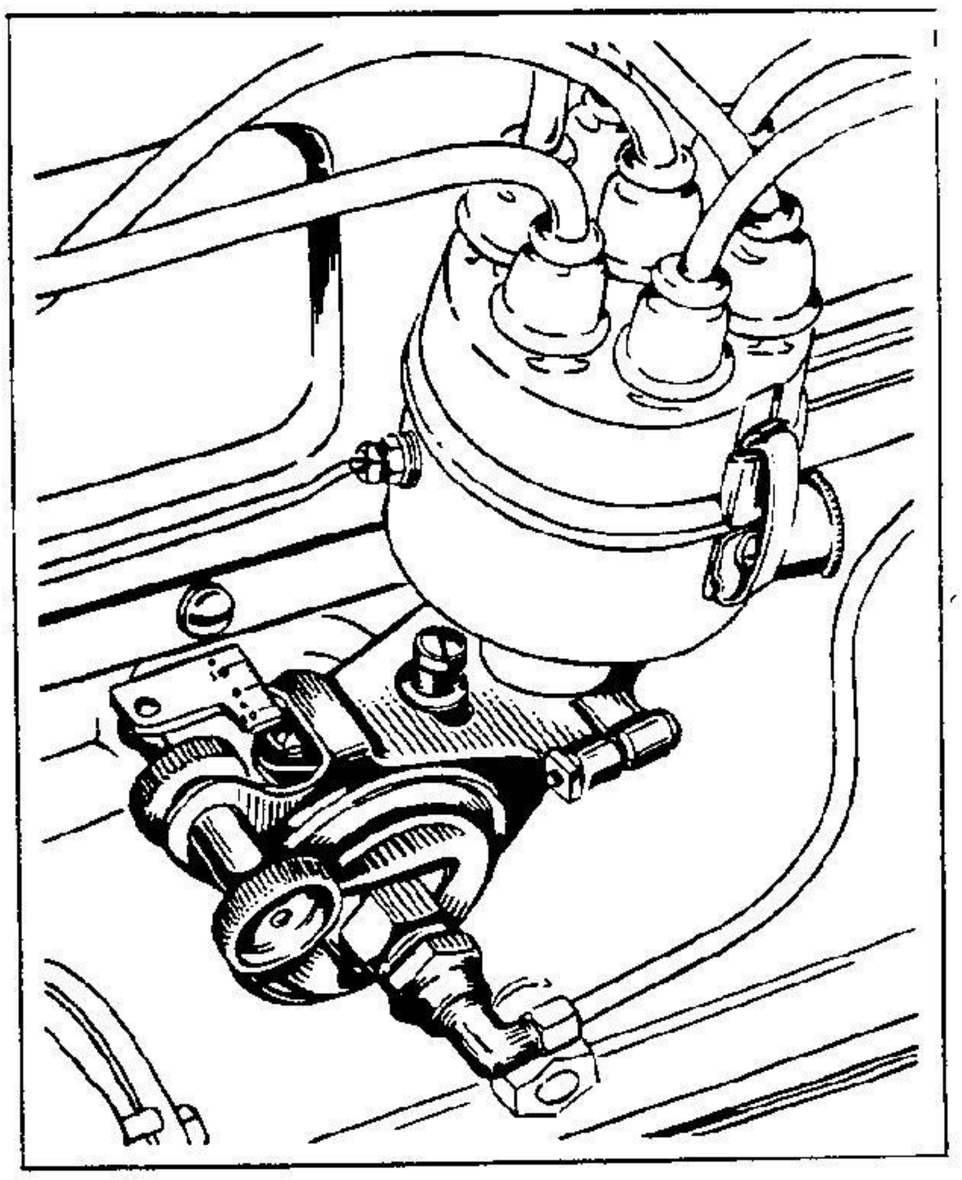

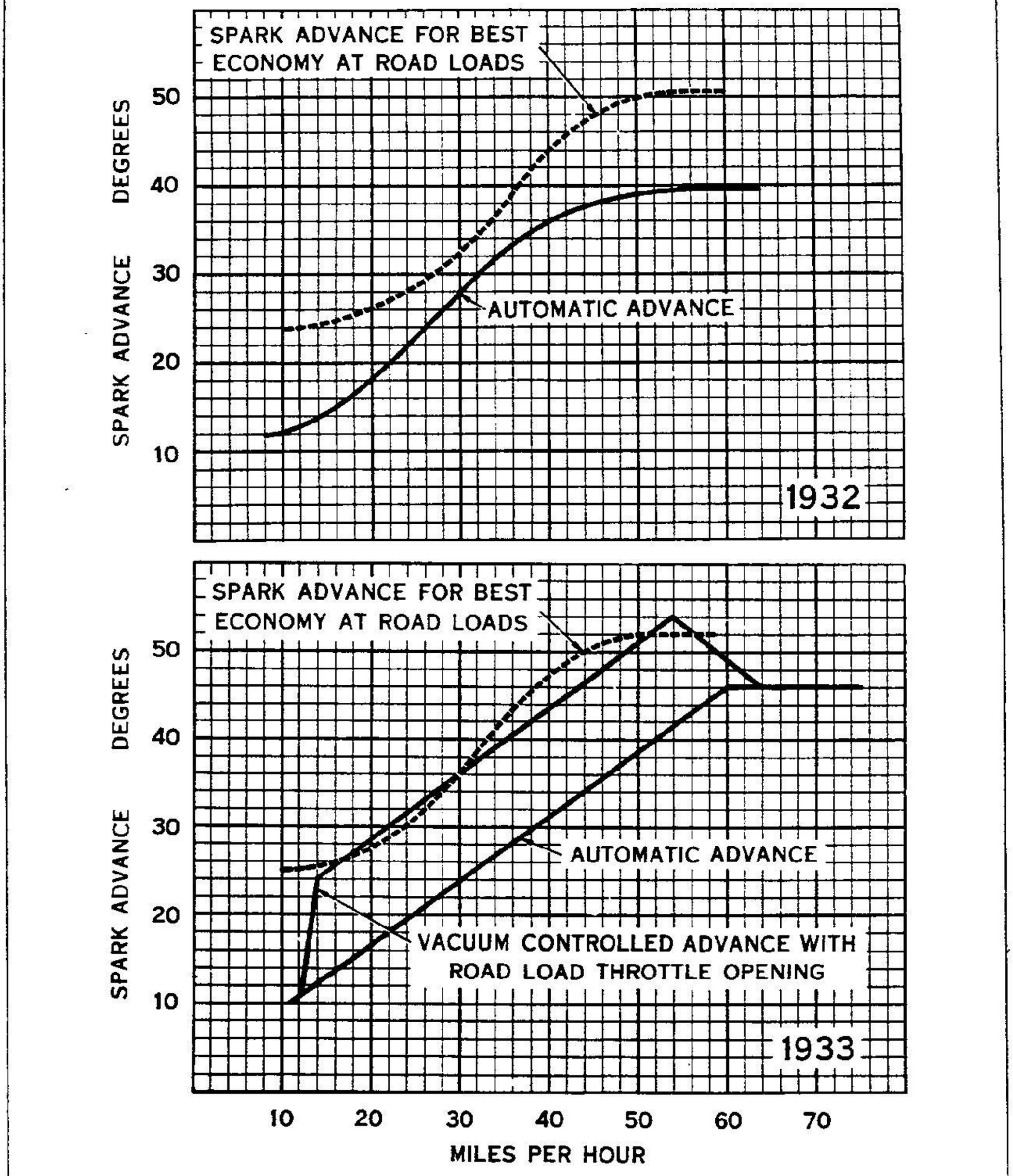

SPARK ADVANCE CURVE

tion is applied to the diaphragm causing the distributor to advance in relation to the suction.

The distributor body is larger in diameter to provide increased spark range and to allow more space for the weight and spring mechanism inside. The terminals are also located on a larger circle. The automatic centrifugal advance control has a greater range of action, the variation of which is maintained within closer limits.

OCTANE SELECTOR



An Octane Selector is provided at the ignition distributor to permit the manual adjustment of the advance arm. With the wide variety of motor fuels which are now available to motorists, it is necessary to provide means by which the spark timing may be easily adjusted to suit the octane rating of the particular fuel in use. With the Octane Selector adjusted to the proper setting, satisfactory performance from a knock standpoint can be obtained, even when the cheapest fuel is used. Adjustment of the Octane Selector is effected by means of a large, knurled nut and check nut. As these are screwed inward or outward the position of the distributor advance arm in relation to the mounting bracket is changed, advancing or retarding the ignition spark ten degrees. The stationary bracket is graduated in degrees of flywheel rotation.

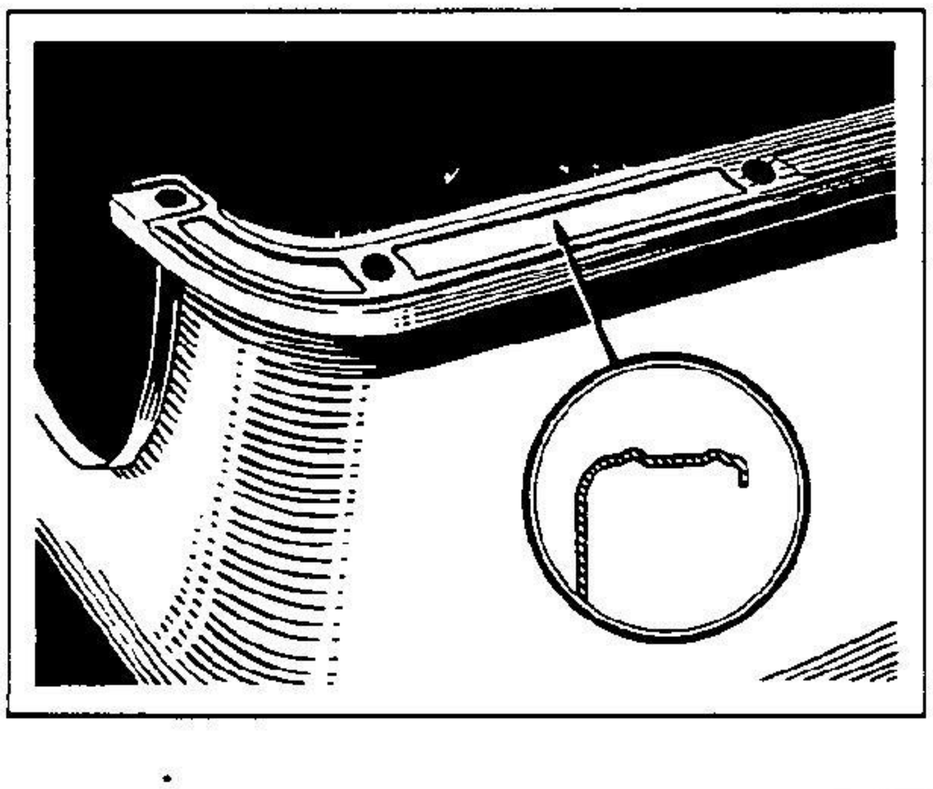

The pointer moves with the advance arm and vacuum control diaphragm. While the graduations permit definite adjustment when tuning the engine, the intention is to keep the pointer at zero when servicing the car, thus leaving a full ten degree range of spark adjustment in either direction. These graduations also provide for resetting the adjustment to any previous position, if desired. In addition to compensating for fuels of different octane ratings, the Octane Selector also provides adjustment of the spark timing to suit varying conditions of the engine and varying climatic conditions.

OIL PAN

The oil pan and all its seals are improved to prevent oil leakage. The entire flange surface is made much more rigid by the addition of narrow embossed beads which blend with bosses at each of the bolt holes. At the front bolts a narrow dam is embossed so as to stiffen the corner of the pan and exert extreme pressure. This flange structure increases the unit pressure on the gaskets insuring a tighter and more leak-proof double joint. The increased width and thickness of the gaskets also tend to reduce the possibility of leakage. The cork seals at the front and rear bearing caps are also increased in thickness; and the grooves in the caps are of such depth as to insure a tight leak-proof seal.

OIL PUMP

The tendency of oil to leak from the crankcase at the upper end of the distributor boss is eliminated by an enlargement of the milled flat on the side of the oil pump body which acts as an oil return passage. This permits the free flow of oil back to the oil pan before it can be forced along the distributor body to the point of leakage.

OIL FILLER TUBE CLAMP

The clamp which secures the oil filler and ventilator tube to the crankcase is redesigned to provide a more secure mounting. The clamp bolt and nut are replaced by an integral tongue and slot connection. The clamp

is squeezed tightly around the tube, being slightly pressed into the tube metal except where a relief is provided by a long slot in its body. A tongue at the clamp end is clinched after passing thru a slot in the bracket portion. The clamp is tightly drawn before the clinching. This method of clamping prevents rotation and endwise movement of the tube in the clamp.

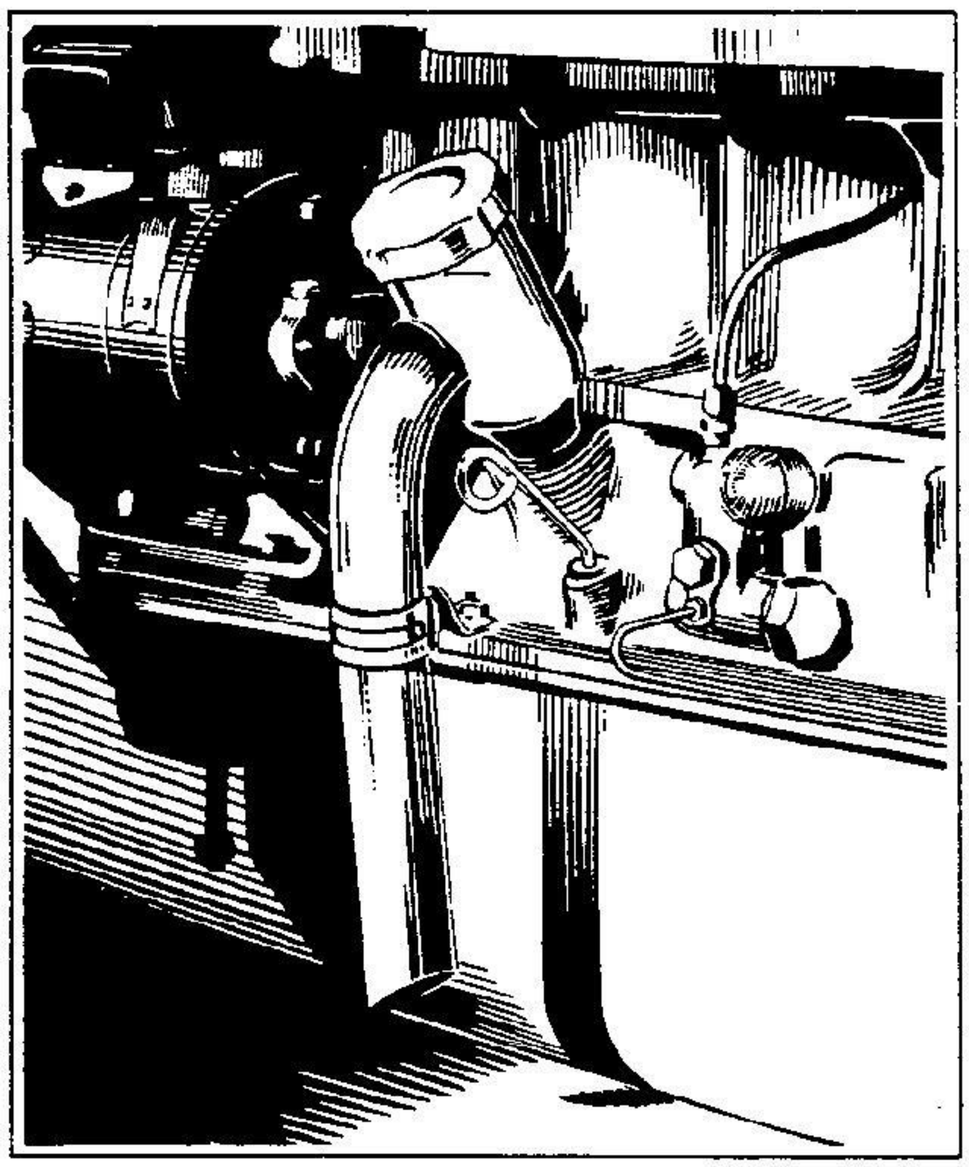

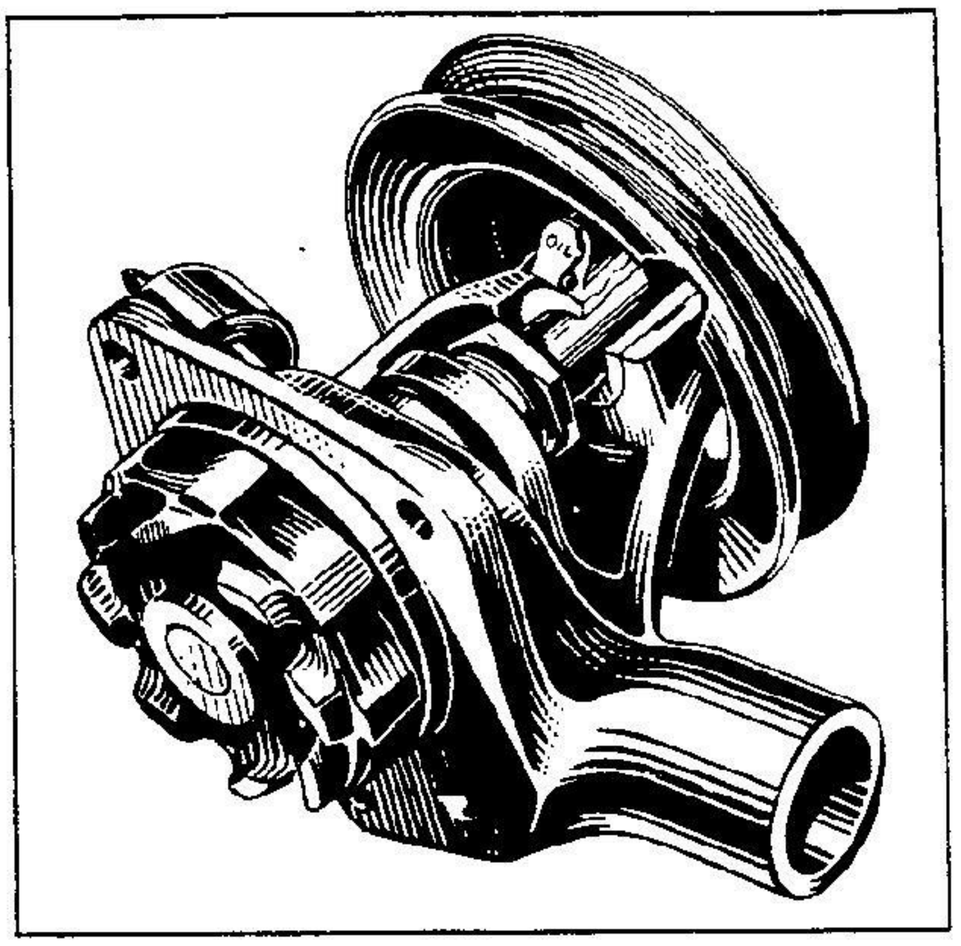

the bushing from above thru an unprotected hole. Thus the bushing received only as much lubricant as it could absorb at the time of filling plus a small amount which might lie on top of the bushing until it was splashed out by the movement of the car. In the new design the walls of the bushing are still permitted to soak up as much oil as they can hold at the time of filling, and, in addition, the annulus around the entire periphery of the bushing as well as the feed hole and oil cup are filled. The cup insures retention of the oil until it is absorbed by the bushing. This improvement increases the life of the bushing and shaft.

OIL LEVEL GAUGE

Another engine refinement is an improved oil level gauge rod. This is made from round steel wire, for greater rigidity, and has a looped handle which extends farther from the crankcase, for greater accessibility.

WATER PUMP

The lubrication of the front Durex bushing in the water pump is improved by the addition of an annular groove and an oil cup. With the addition of these two features a larger volume of oil is held in reserve to supply the needs of the porous bushing. In the previous design oil was fed directly to

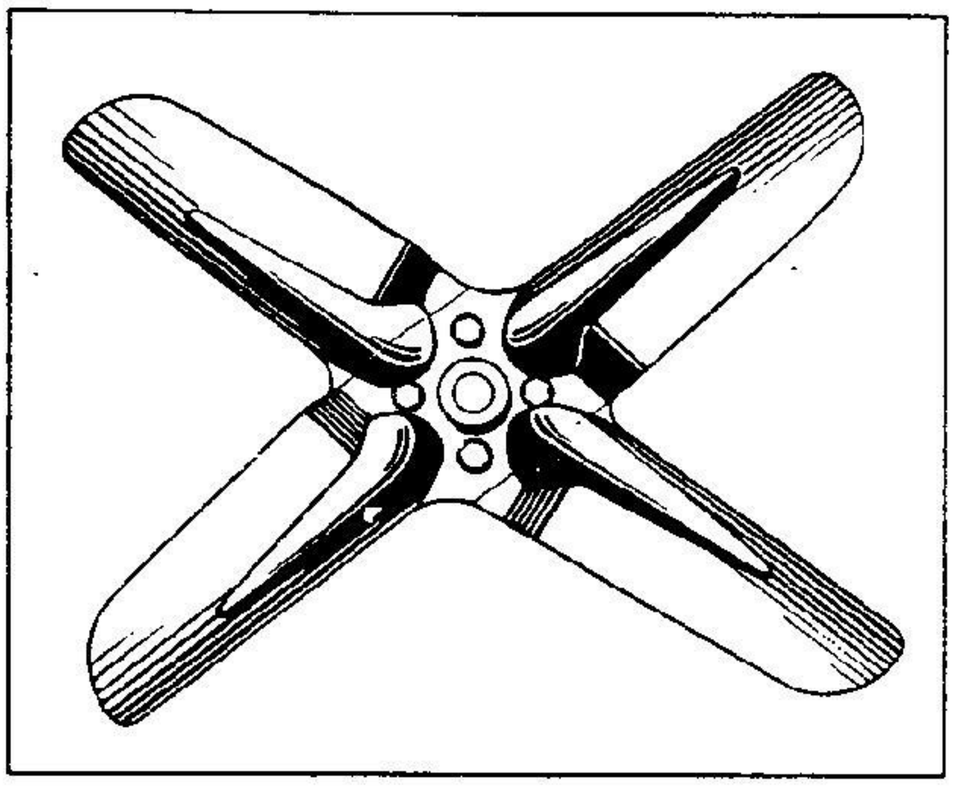

FAN

The harmonic principle on which the 1932 fan construction was based is applied again, in another form, to the design of the new and improved 1933 fan. While all four blades are of the same width and have the same pitch, they are staggered angularly 15 degrees from equal spacing to break up the frequency of the fan vibrations. This fan operates with astonishing quietness and efficiency, delivering a large volume of air for the adequate cooling of the more powerful engine.

ENGINE MOUNTINGS

The powerful 1933 engine is mounted on the frame according to an entirely new principle known as "Sta-Namic Balance". This principle takes its name from the two outstanding causes of undesirable engine sensation, the effect of which it eliminates. These causes are residue static and dynamic forces, and they are present in all engines whether they have sixteen cylinders or only four cylinders. These residual forces are at a minimum in engines which are inherently in balance, and they are definitely eliminated in engines mounted according to the "Sta-Namic Balance" principle. With this mounting, which was evolved by Chevrolet, the undesirable engine sensations are eliminated, leaving only the sensation of horsepower being delivered to the wheels quietly and smoothly, very much like the sensation of a clipper ship gliding

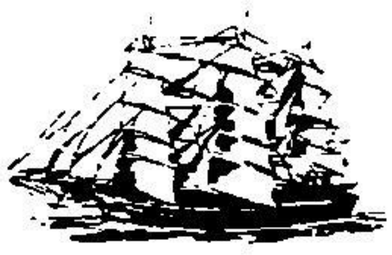

thru the water under the tremendous power of a high wind pushing the giant sails before it - smoothly and quietly. In the past it has been common practice to eliminate engine sensation by the application of very soft rubber to the engine supports. This permitted an objectionable amount of engine movement. This movement of the engine is undesirable, not only from a standpoint of durability, but also because the excessive movement of the controls in the driver's compartment is a constant reminder of instability, which has a dangerous, disturbing effect on both the driver and his passengers.

In an endeavor to eliminate objectionable engine sensations of all kinds, General Motors has pioneered the scientific investigation of engine movement and its causes. From its investigations on the dynamometer, in the laboratory and on Proving Ground roads and hills, certain facts were established. In order to deliver power to the rear wheels of an automobile, the power plant must be fastened to the frame in such a manner that it will not turn over backwards, itself, instead of driving the wheels. A very soft and flexible power plant mounting has this tendency with an effect similar to that of a man trying to push a heavy load with his feet on ice. He can push only to the extent that his feet will hold. When they slip, he



is powerless. To deliver full power, an engine must not give or "slip" in the frame. Therefore, it must be securely anchored to the frame.

Resistance to engine "slippage" must be built into the chassis. In meeting this resistance, the two sources of disturbing sensations - static residue and dynamic residue - must be considered.

It is a recognized fact that when the power plant is anchored to the frame by the ordinary rigid, metallic mountings, objectionable engine sensations are set up in the car. These sensations which are present in all automobiles, are much more disturbing with engines which are not inherently balanced as is a six-cylinder engine.

Investigation pointed to the need of supporting the engine on the frame in such a manner that the resistance to the engine delivering its full power would be so located and designed as to nullify the disturbing effect of static residue and dynamic residue. With the cause determined and the direction of its effect established, the principle of "Sta-Namic Balance" was evolved.

The effect of static residue is a rocking motion. Provision against this effect has been made heretofore. However for the first time,

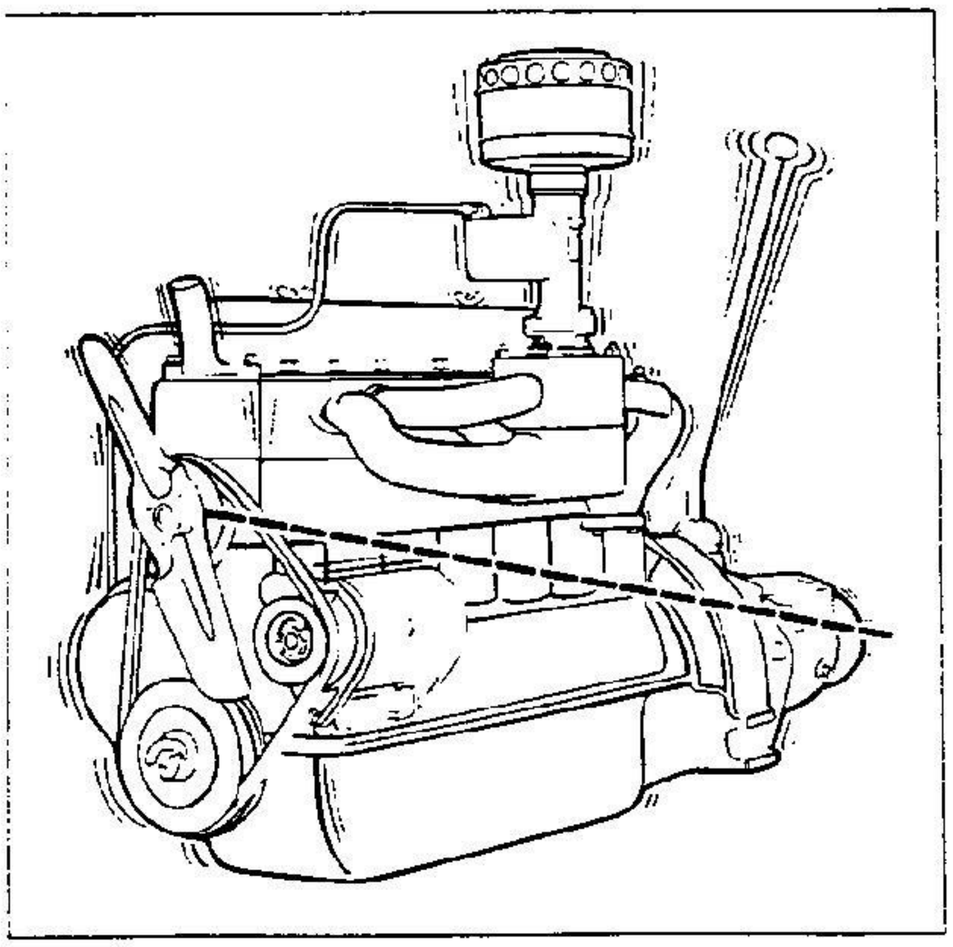

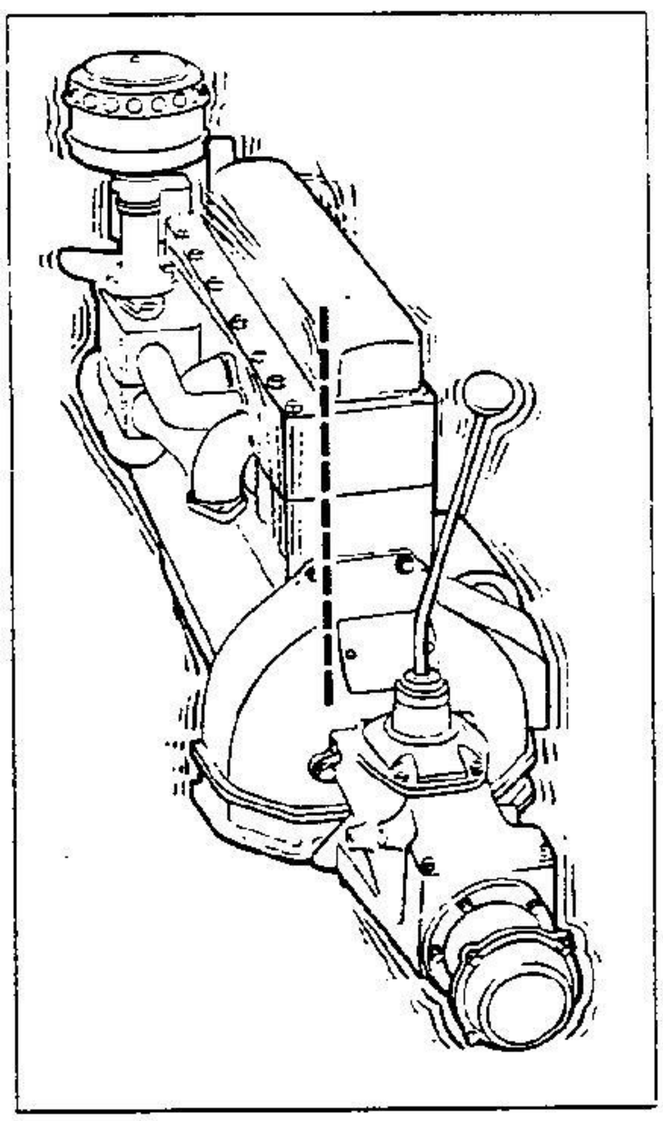

and only with "Sta - Namic Balance", effective provision has been made for the objectionable sensation due to dynamic residue, which tends to rotate the engine about itself. Heretofore, when the static residue alone has been considered, an excess of softness at the mounting points was necessary to obtain reasonable smoothness. However, the result was an objectionable rocking of the engine with its undesirable effect on the driver and passengers. When dynamic residue as well as static residue is considered, the engine may be mounted with relative rigidity. Thus, in the 1933 Chevrolet, quiet, durable smoothness, without instability as indicated by excessive rocking, is obtained by the application of the principle of "Sta-Namic Balance".

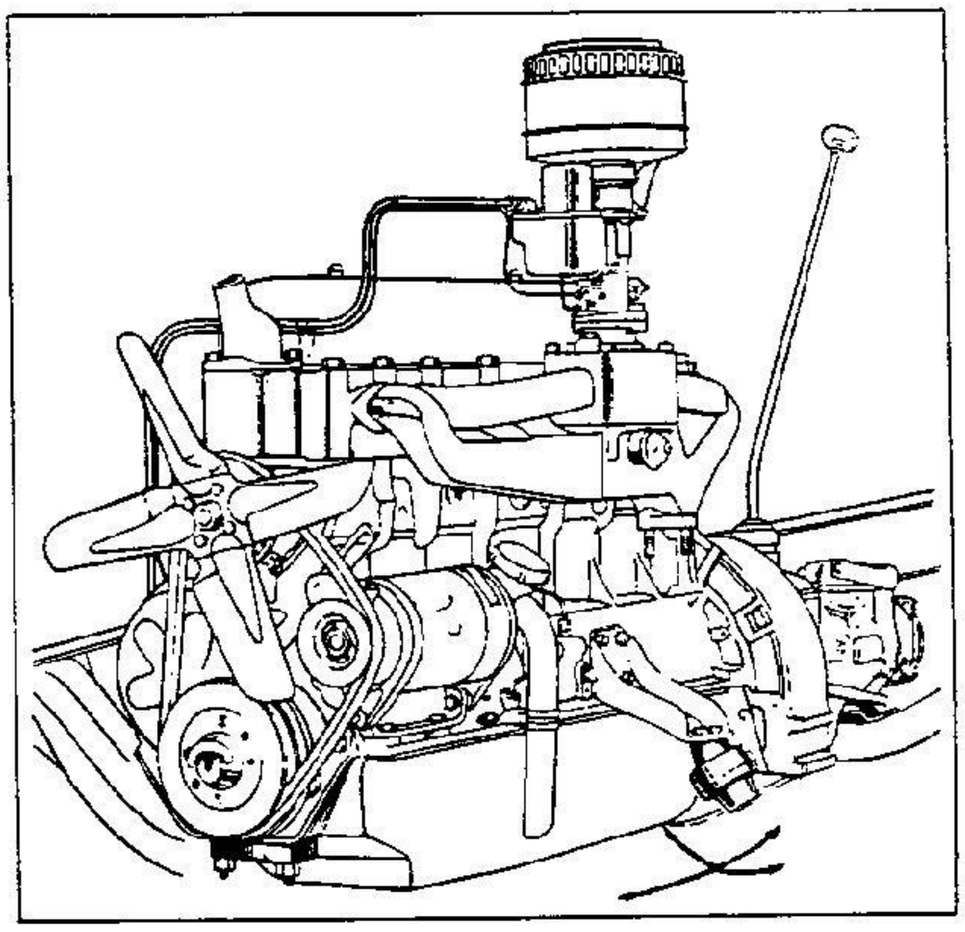

In the development of the 1933 engine mountings an extensive study of rubber was made. As a result many misconceptions concerning the properties of rubber were corrected, and many new methods of testing and inspecting rubber were evolved.

The front mounting consists of a malleable iron casting around which relatively soft rubber is moulded and vulcanized into a stamped steel retainer. This mounting differs from the 1932 mounting in that the casting thru which the engine mounting bolts pass is in one piece, the two bosses being connected by an inverted "T" section web. The rubber is moulded so as to entirely cover the casting

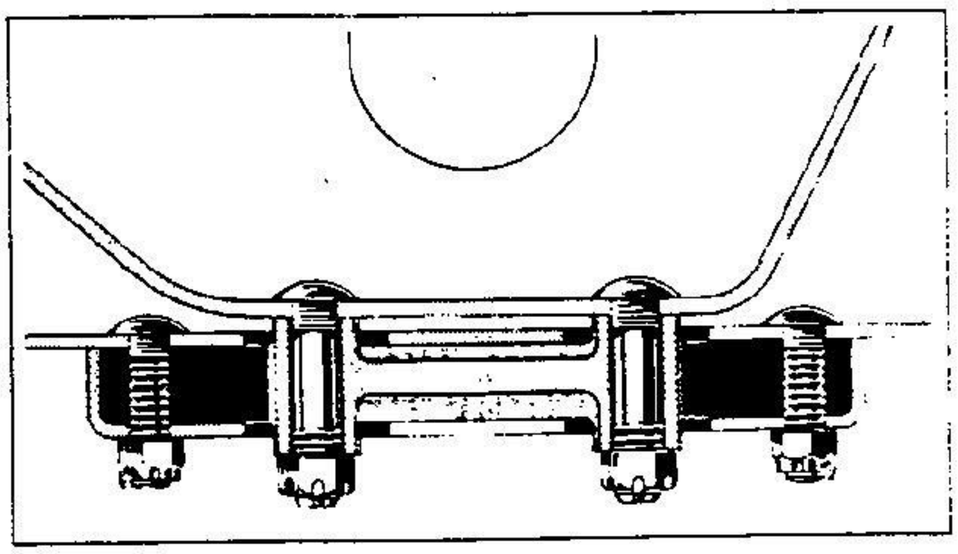

except on the faces of the two bosses. The rubber extends only a slight distance beyond the bosses. It is vulcanized to the retainer which has elongated slots providing generous clearance for the protruding rubber-coated bosses. In assembly the rubber is not compressed as in the previous design, permitting greater freedom for side movement. The two side mounting cushion units are identical. Each consists of two malleable iron castings, each of which has two tapped holes for attachment to the mounting brackets. They are separated by 1/2 inch of rubber which is securely vulcanized to each casting not only

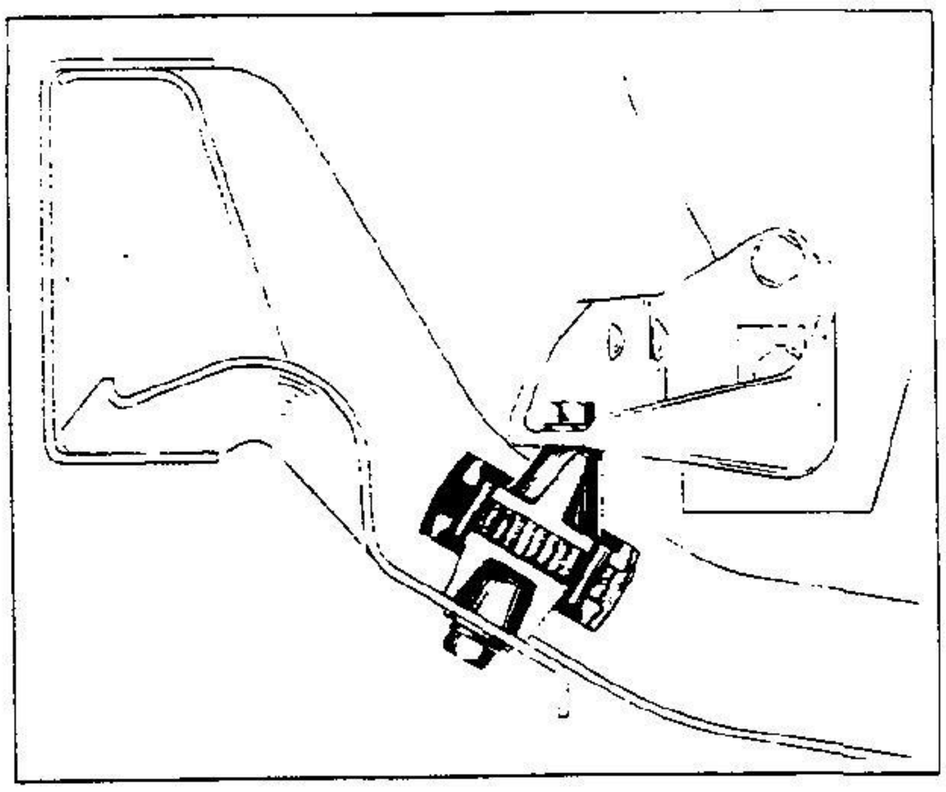

at their adjacent flat faces, but around their entire periphery. The area and position of the vulcanized faces provide such a secure joint that a pair of mountings is capable of supporting, in tension, a weight equal to that of the entire car. The outer ring of rubber performs a dual function, affording additional security of the vulcanizing, and protecting the main body of the rubber from heat, oil and water. At the right side, one of these mounting cushions supports the engine on the sub-frame. It is attached to the front face of the clutch housing by two bolts and to a pad on the side of the clutch housing by two bolts, while two more bolts secure the cushion from below to the sub-frame. The bracket thru which this support is effected consists of two sturdy channel section stampings riveted together. Somewhat farther forward, on the left side of the engine, the other mounting cushion supports the engine from a large pad by another sturdy, ribbed, channel - section bracket which is attached to the crankcase by four bolts. In this case also, the attachment

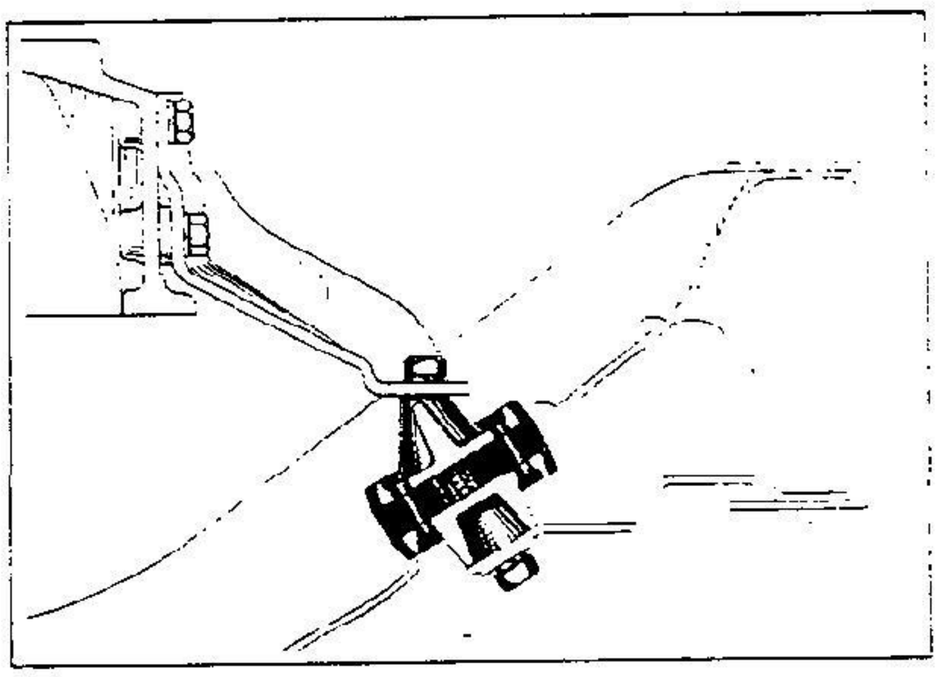

to the left-hand sub-frame is by two bolts inserted from below.

As in the 1932 models, the rubber mounting unit at the rear end of the over-running clutch housing is strictly an insulator which is not intended to carry any static load. In design and method of attachment this unit is much the same as its predecessor. The rubber member, however, is shorter and thicker, and the holes in the support stamping are larger permitting greater freedom for side movement.

These four simple but highly scientific mounting units, properly located, provide the "Sta-Namic Balance" which insures the smooth, quiet operation of the powerful engine.

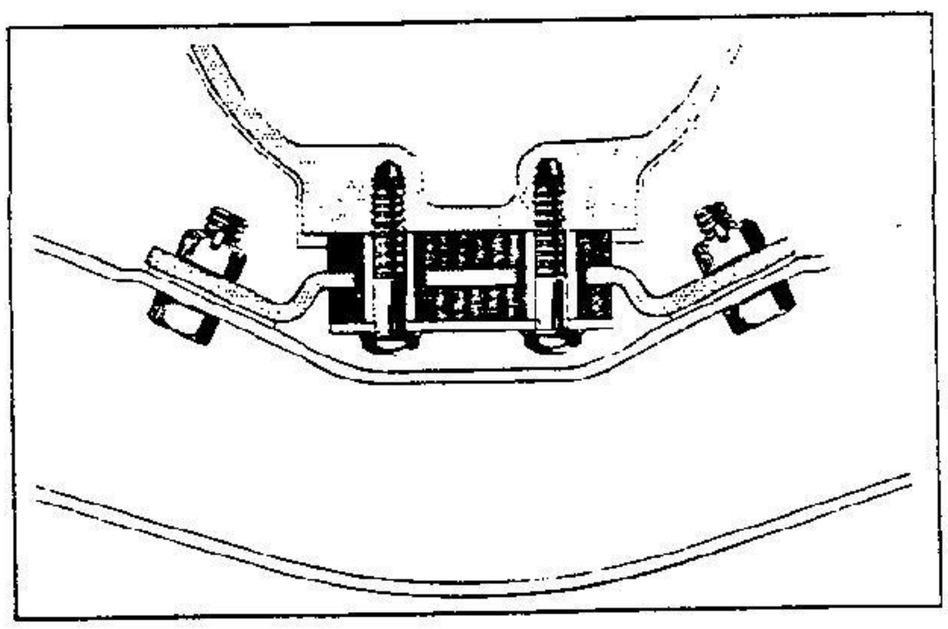

COMPARATIVE SPECIFICATIONS

	1932	1933
Stroke	3 3/4	4
Piston displacement	194 cu.in.	206.8 cu.in.
Maximum horsepower	60	65
Engine R.P.M. at maximum horsepower	3000	2800
Horsepower at 1000 R.P.M.	24.5	28
Horsepower at 2000 R.P.M.	49	55
Maximum torque - foot pounds	130	146
Engine R.P.M. at maximum torque	800 to 2000	1000 to 1800
CRANKSHAFT		
Weight	53#	63 1/2#
Counterweight radius	3 1/8	3 3/8
Crank pin diameter	2	2 1/8
Crank pin length (effective)	1 25/64	1 17/64
Center main bearing length (effective)	2	1 7/8
Thickness of short arms	27/32	31/32
Thickness of long arms	1 1/4	1 3/8
Static balance limits	1 oz.in.	1/2 oz.in. in one plane
Permissible dynamic unbalance	1 oz.in.	None
HARMONIC BALANCER		
Outside diameter of weight	6 1/32	6 1/2
Width of springs	3/8	5/8
Number of springs	48	80
Tuning - cycles per second	145 - 165	135 - 150
FLYWHEEL		
Drive	1 dowel- 4 bolts	5 dowels
Web thickness	13/32	5/8
Dynamic balance limits	1 oz.in.	1/2 oz.in.
CONNECTING ROD		
Length	7	7 1/2
Bolt centers	2 9/16	2 11/16
Projected bearing area - sq.in.	2.8	2.7
Babbitt thickness	.047	.024
Bolt head diameter	5/8	13/16
PISTON		
Number of oil return holes	8	12
Size of oil return holes	7/64	9/64
Width of oil control rings	5/32	3/16
SPARK PLUG		
Type	G-10	K-9
Thread diameter	18 m/m	14 m/m
Position of electrodes	In pocket	At edge of chamber
Gasket	Copper and asbestos	Hollow copper
VALVE MECHANISM		
Width of valve seats	.045-.065	.030-.050
Rocker arm center distance	3 3/16	3 5/32
Radius of rocker arm contact surface	1/2	3/8
Rocker arm bushing	Split,rolled bronze	Solid,cast bronze
Valve spring pressure with valve closed	44#	57#
Valve spring pressure with valve open	80#	95#
Camshaft center bearing	Cast iron (in case)	Steel-backed babbitt

	1932	1933
Spark advance control	Centrifugal & manual	Centrifugal & vacuum
Maximum automatic spark advance	38°	46°
Additional advance by vacuum control	None	12°
Octane Selector	None	Manual
Distributor body diameter	2 19/32	3 9/32
Depth of flat on oil pump body	3/64	5/64
Oil pan flange design	Plain	Ribbed
Oil pan gasket thickness	1/16	3/32
Oil pan gasket width	13/16	1
Oil pan seal thickness	3/16	7/32
Oil filler tube clamp	Bolted	Crimped
Offset of oil level gauge	None	1 1/2
Water pump front bushing lubrication	Oil hole	Oil cup and annulus
Fan blade angle	90°	75°-105°
Carburetor metering rod	2 steps,no spring	3 steps with spring
INLET MANIFOLD		
Center port section	Round	Flat
End port section	Round	"D" section
Arm position	Horizontal	Inclined
Heat valve control	Manual	Thermostatic
AIR CLEANER		
Outside diameter	6 17/32	7 9/16
Number of expansion chambers	3	5
ENGINE MOUNTINGS		
Type	"Diamond"	"Sta-Namic Balance"
Front rubber attachment	Pressure	Vulcanized
Rubber thickness in side mountings	11/64	1/2
Size of rubber in rear mounting	1 1/4 x 3 1/4 x 1/4	1 1/2 x 2 3/4 x 3/8

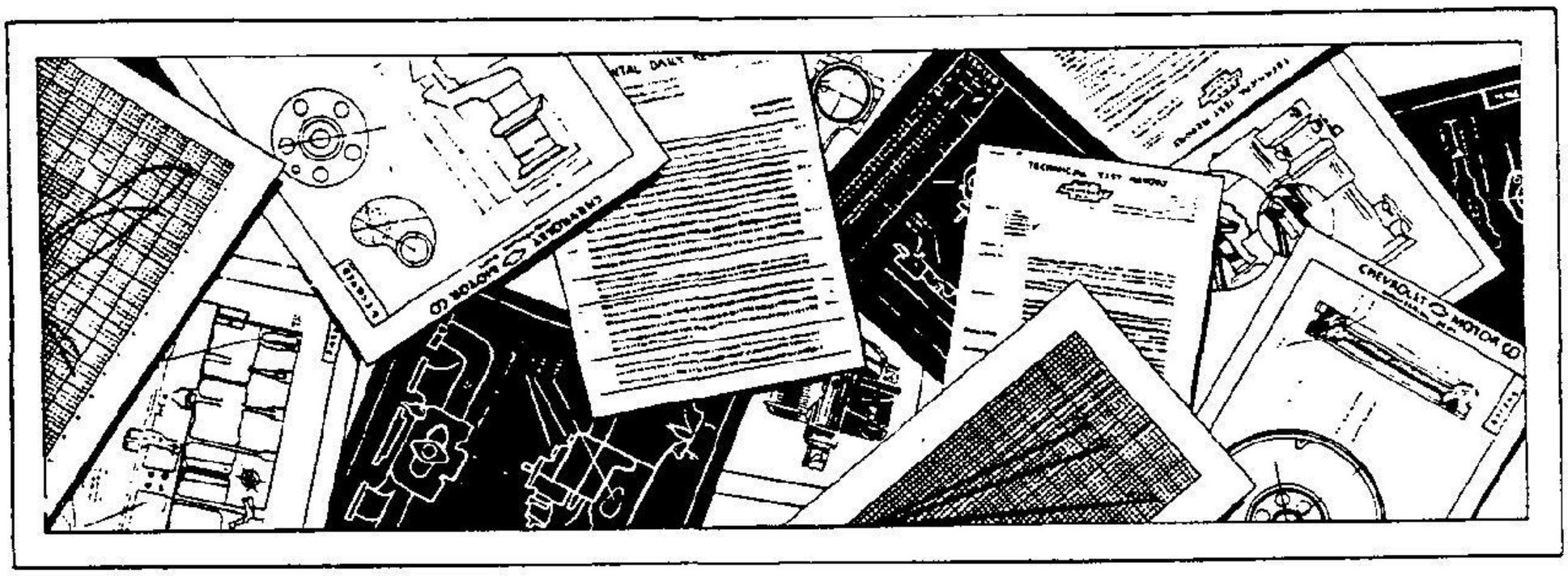

CLUTCH

The nine-inch, three-finger clutch which has performed so satisfactorily during the 1932 season is improved and refined to insure even smoother operation in transmitting the increased torque of the larger engine.

During the 1932 season the clutch spring pressure was increased approximately ten percent. This was accomplished by introducing more coils of a slightly smaller wire. The pressure builds up at a lower rate, maintaining more nearly the same spring pressure as the facing wears.

The clutch disc facings are designed with a higher coefficient of friction to transmit the increased torque of the engine. Their

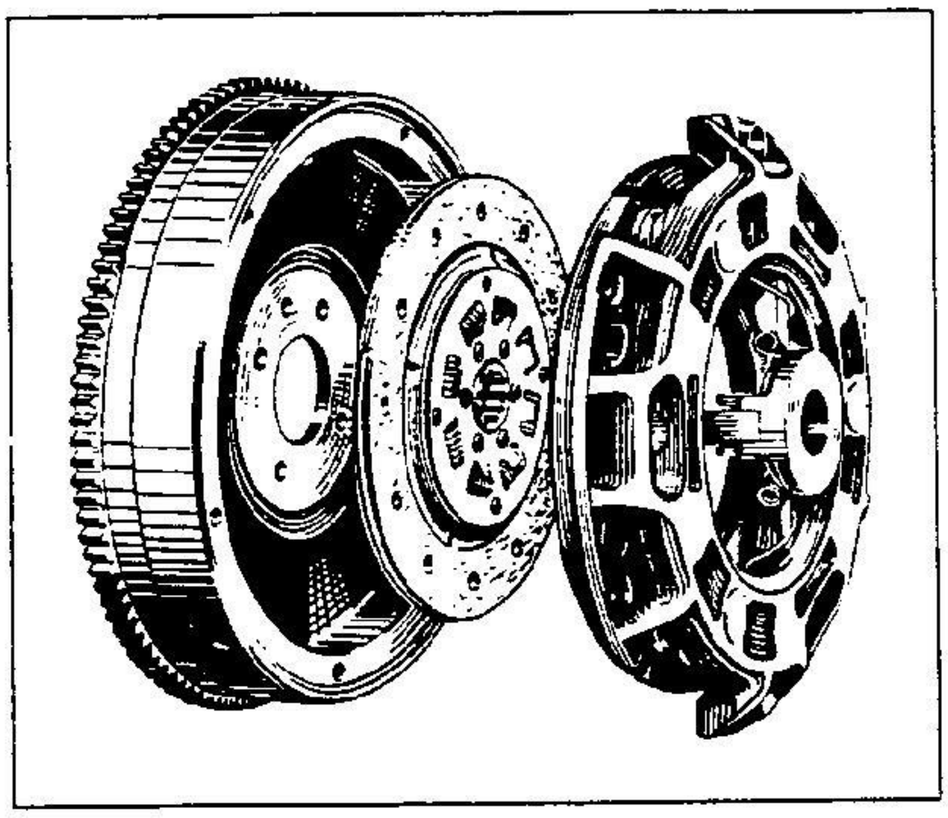

braided-moulded construction insures longer life and more uniform performance over a wider temperature range. In combination with a slight increase in the warpage of the steel clutch disc they provide smoother clutch action even when transmitting greater torque. The durability of the disc is increased by an increase in the diameter of the spring retainer, and objectionable vibration is eliminated by an increase in the pressure exerted by the eight springs which drive the disc.

The forged clutch fork is replaced by an ingenious stamped design which is lighter, stronger and more uniform. The seat for the

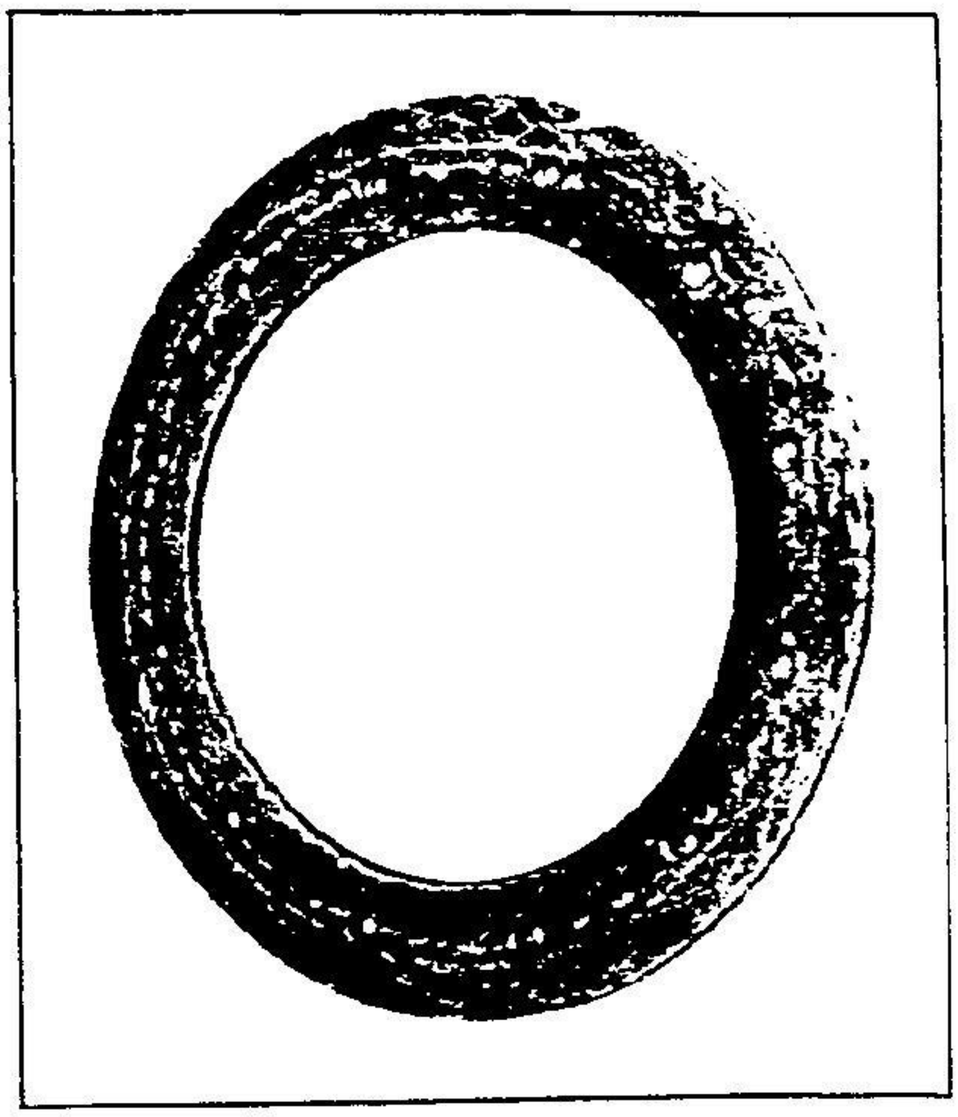

ball stud is a separate stamping, flanged and welded to the fork. The stamped retainer is of heavier gauge stock. Contact between the fork and ball stud is now maintained by a corrugated circular spring of rectangular section which exerts greater pressure and prevents the fork from floating.

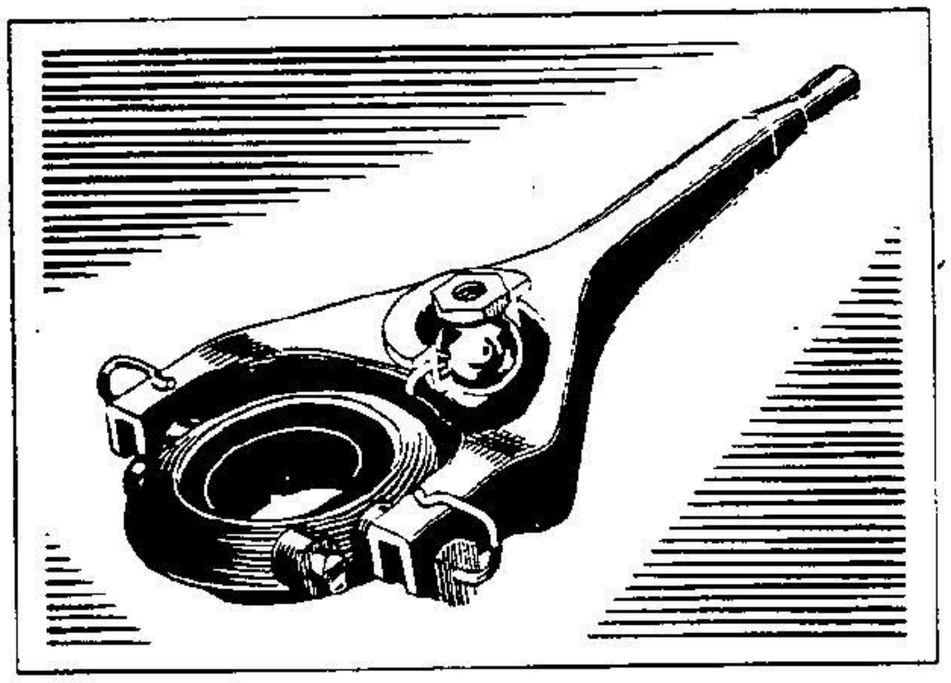

COMPARATIVE SPECIFICATIONS

	1932	1933
Pressure exerted by each clutch spring	104#	114#
Total clutch spring pressure	936#	1026#
Clutch disc warpage	.025-.045	.035-.060
Clutch friction rings	Moulded	Braided-Moulded
Spring retainer diameter	4 3/4	4 7/8
Clutch disc spring pressure	65#	85#
Clutch fork	Forged	Stamped
Clutch fork ball retainer thickness	.050	.062
Clutch fork ball spring	Round wire	Rectangular wire corrugated

TRANSMISSION

During the latter part of the 1932 season helical constant-mesh gears were adopted. Due to the greater area of the contact surfaces and to the larger number of teeth which are always in mesh, the transmission is exceptionally quiet in operation, particularly in second gear. The reduction ratios in first and second speed, and in reverse,

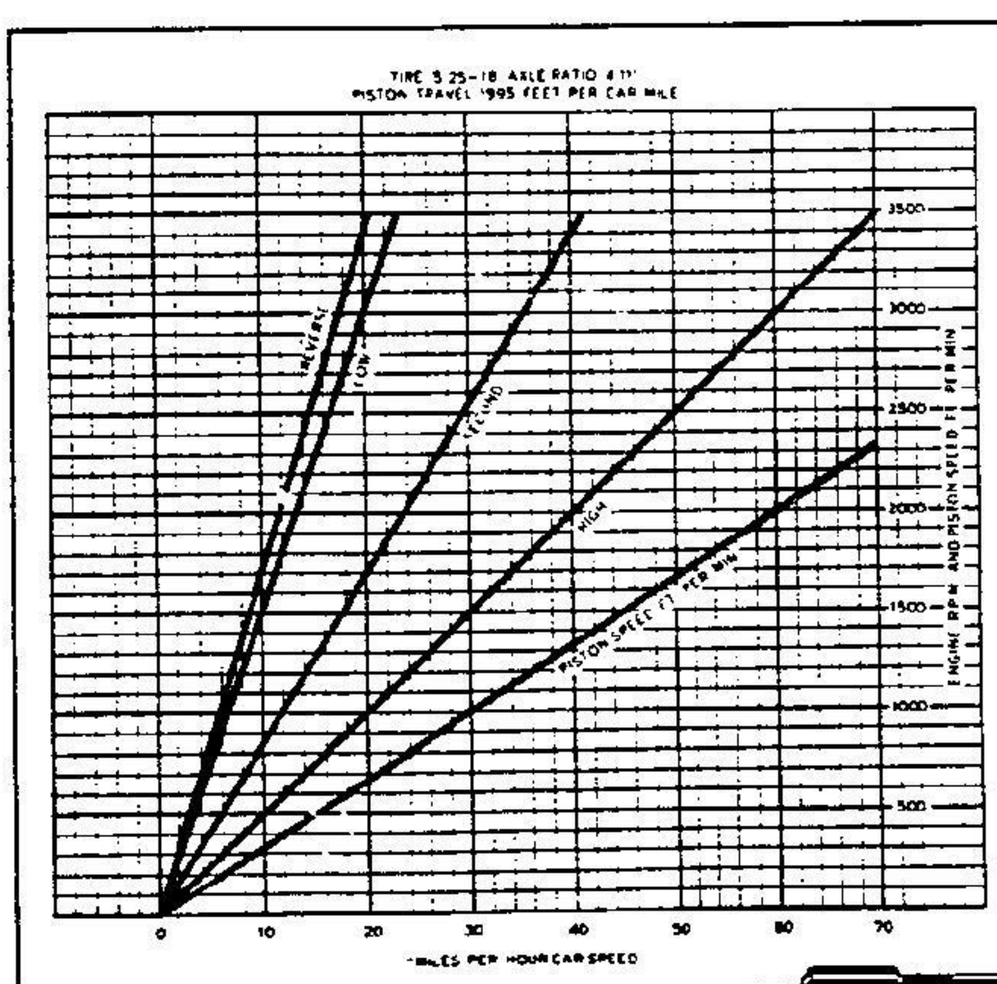

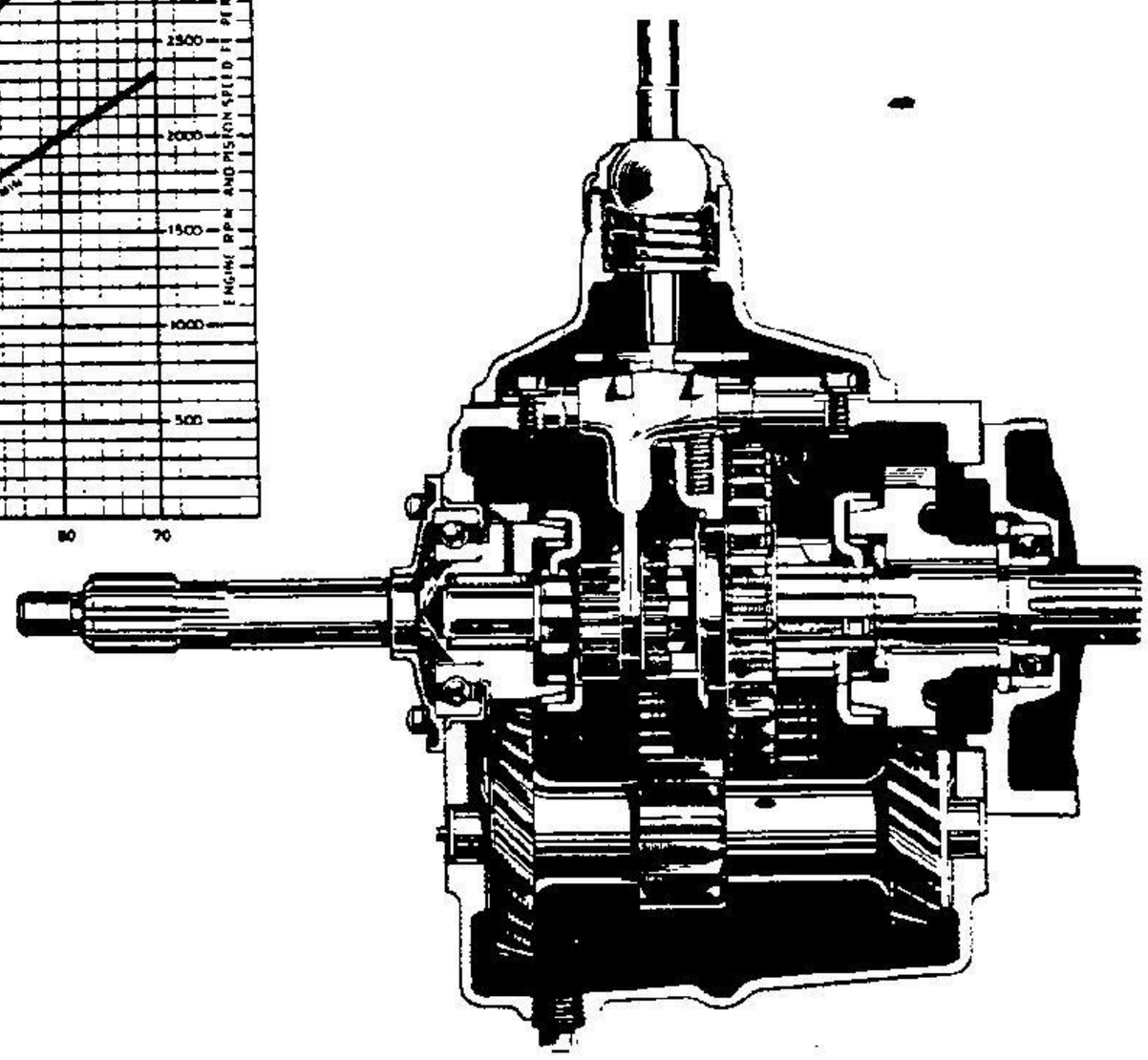

are changed to give the best performance with quiet operation and maximum durability. The synchronizing mechanism is improved and refined in many detail ways which facilitate manufacture, thus insuring smoother operation without undue production difficulties. The synchronizing cones are made of high grade alloy bronze having a considerably thinner wall which also permits a reduction in the diameter of the synchronizing drums. The resulting reduction in the weight of the synchronizers reduces their inertia to quite an appreciable extent, increasing the life of both the synchronizers and their contacting parts considerably. The strength of the second and third speed clutch is increased by the addition of metal at the bottom of the engaging slots and in the fork groove. The heat treatment is also improved to insure greater strength.

COMPARATIVE SPECIFICATIONS

	1932	1933
Type of constant-mesh gears	Spur	Helical
First speed gear ratio	3.17 : 1	3.02 : 1
Second speed gear ratio	1.82 : 1	1.70 : 1
Reverse gear ratio	3.57 : 1	3.40 : 1
Outside diameter of rear synchronizing cone.	3.86	3.70
Outside diameter of front synchronizing cone	3.00	2.84

OVER-RUNNING CLUTCH

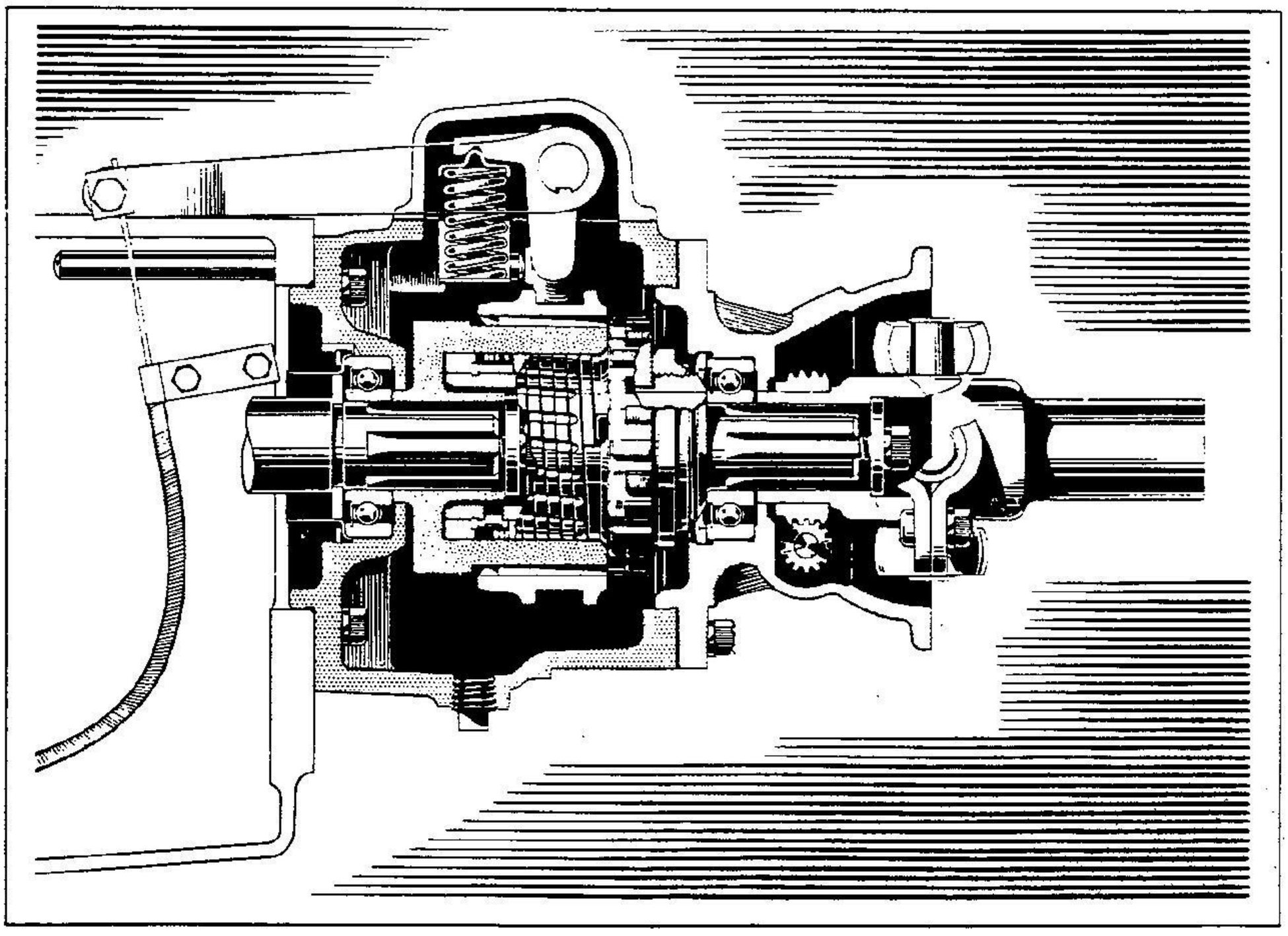

While the over-running clutch or free-wheeling unit still employs the expanding spring principle, it is improved and simplified. The outstanding difference between the new design and that of 1932 is the single pocket feature. This provides for the anchoring of the expanding spring on the outside of the lock ring held to the driven shaft, permitting it to expand only in the pocket formed by the driving sleeve, insuring more definite alignment and spring contact. It will be remembered that in the previous design both the driving and driven members were hollow and that the spring expanded in both.

In the 1933 design as in the 1932, the driving sleeve is splined to the transmission main shaft. It is of high grade alloy steel carefully hardened and ground. Splines on the outside of the sleeve permit engagement with the lock sleeve for conventional operation. The driven shaft, which is solid except for the main shaft clearance hole in its front end, is splined at the rear to provide attachment for the universal joint. This shaft and its lock ring are also of hardened and ground alloy steel. The lock ring is pressed on the driven shaft with a broached key in the ring engaging a milled keyway in the shaft. It is locked in position by a large nut which in turn is locked to the shaft by a portion of its hub which is depressed into the keyway.

This ring is splined around its circumference to provide engagement for the lock sleeve when in conventional drive. The front hub of this ring has a helical face against which the first coil of the expanding spring is assembled. The helix begins and ends in the opposite sides of a wide milled slot. The spring end butts against the high side of this slot, taking the direct force of the drive when not in free wheeling. At this point, the turned-up end of a lug riveted in two places to the side of the coil a slight distance from the spring end thrusts against the low side of the slot, holding the spring in position on the driven shaft. The expanding spring consists of two parts, a main spring of 6 tempered rectangular spring wire coils to the forward end of which an auxiliary spring of 3 1/2 turns of lighter, flat,

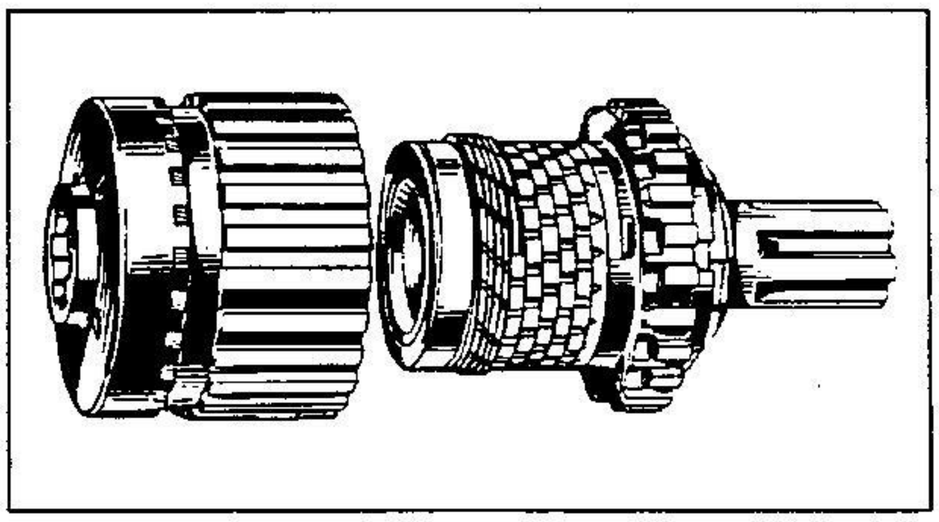

round-edge wire is attached. To provide adequate support for the auxiliary spring, a split ring is inserted between it and the driven shaft. The rear end of this ring is shaped to follow the helical lead of the main spring. A portion of the ring depressed into a drilled hole in the shaft maintains its relation to the spring. A bearing of high grade bronze at the front end of the driven shaft maintains alignment between it and the drive sleeve. This bearing is grooved on its outside diameter to insure adequate lubrication, and is held in position by a snap ring which fits into a groove in the shaft at the rear end of the bearing.

The outstanding advantages of this simplified single-pocket free wheeling unit are its smooth, quiet operation and its durability.

COMPARATIVE SPECIFICATIONS

	1932	1933
Type	Double pocket	Single pocket
Spring drive contact	Bent lug	End of coil
Bearing	Hyatt	Bronze
Main spring length	2 7/32	1 1/8
Auxiliary spring support	None	Steel ring

FUEL SYSTEM

The gasoline tank and its mounting parts are completely redesigned. The tank has a capacity of fourteen gallons and is broad and

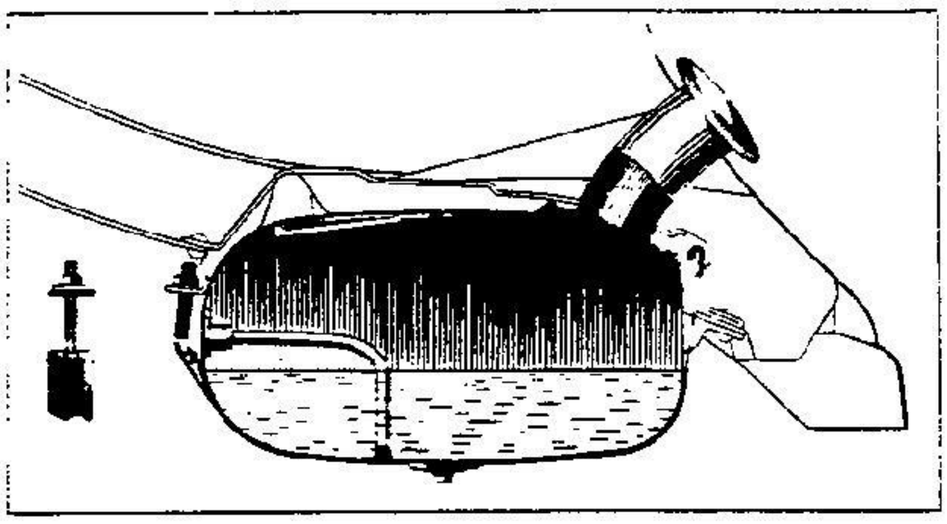

shallow to conform to the rear cross member shape and to maintain its road clearance.The filler flange is considerably longer than heretofore,extending outward beyondthe width occupied by trunk racks which may be mounted at the rear, thus increasing its accessibility. The filler cap lies close to the sheet metal cover over the rear cross member. The new shape of the tank and the improved position of the filler permit complete filling of the tank without the use of a vent tube to prevent air lock. The increase in fuel tank capacity combined with the decreased fuel consumption of the engine considerably increases the distance which can be traversed between refuelings. The mounting of the fuel tank is also improved. A "T" bolt at the end of each strap permits natural alignment, relieving both the strap and bolt of undue strains. The electric gasoline gauge with a single float, isolated from the main body of the fuel by a baffle plate, is located at the right side of the tank.

COMPARATIVE SPECIFICATIONS

	1932	1933
Fuel tank capacity	10 1/2 gallons	14 gallons
Fuel tank width	10 15/16	13 7/8
Fuel tank depth	7 1/4	7 1/2
Fuel tank strap mounting	Riveted bolt	"T" bolt

STEERING

The effort required to steer the 1933 Chevrolet is even less than in previous models. This ease of control is effected by an increase in the gear ratio and an improved method of mounting the steering gear at the frame. The gear ratio is increased by an increase in the number of teeth in the sector circle from twelve teeth to fourteen. The teeth on the steering worm are reshaped to provide for this change. Any tendency to bind the pitman arm shaft is eliminated by the new design of mounting at the frame. The housing is flanged at both ends and is strengthened by four ribs. It is bolted to the gear case at its inner end while the outer flange bolts to the inside of the frame side rail. This mounting is considerably more stable and less likely to become loose. The mast jacket is secured in place by a stamped clamp. The steel-reinforced rubber grommet at the toe board is redesigned to insure a more effective closure by holding down the edges of the toe board mat more securely.

At its point of support to the instrument panel the steering mast is completely insulated oy a flanged cylindrical rubber grommet. The clamp members are steel stampings formed so as to entirely conceal the flattened "U" bolt. The mounting is clean-cut in appearance and provides just enough resiliency to permit necessary movement without noise.

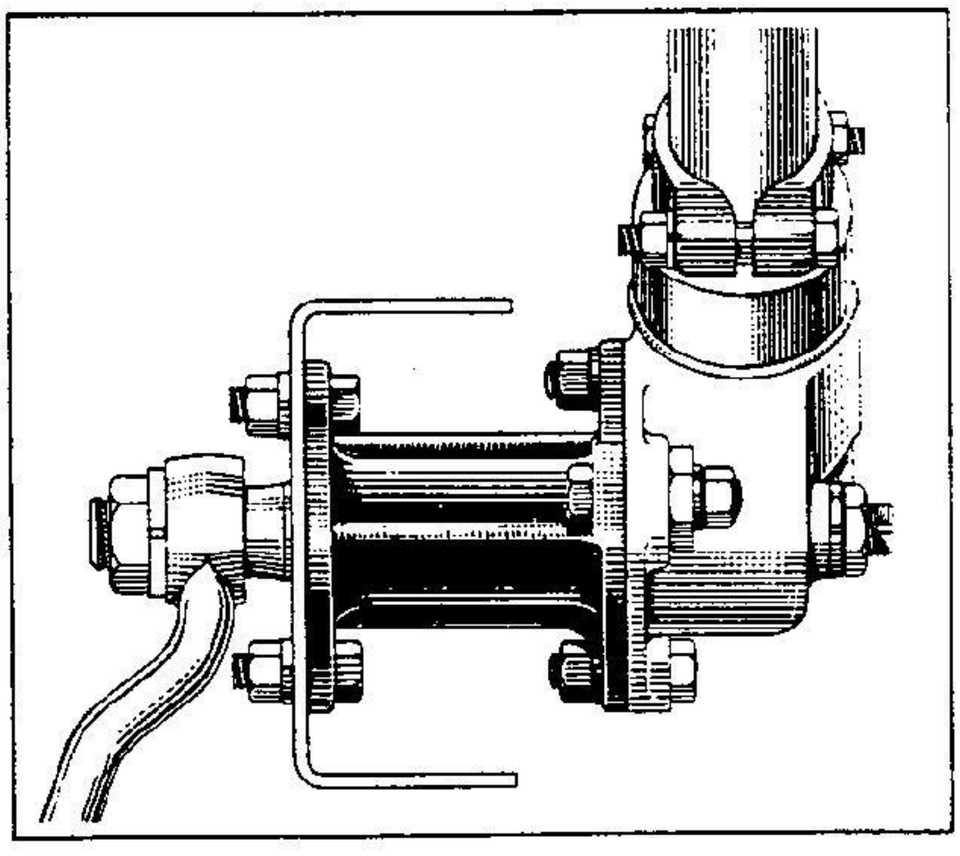

COMPARATIVE SPECIFICATIONS

	1932	1933
Steering gear ratio	12 : 1	14 : 1
Mounting on frame	Clamp	Bolted flange
Insulation at instrument panel	Rubber saddle	Cylindrical rubber grommet
"U" bolt section	Round	Flat

PEDAL MOUNTING

The clutch and brake pedals on the 1933 model are mounted on the sub-frame member independently of the power plant. This location insures a more definite and stable mounting and prevents the transfer of engine movement to the pedals. The outer end of the pedal shaft is piloted in the web of the frame side rail and its inner end is securely clamped on a sturdy bracket made of strap steel 5/16 thick, and 1-5/16 wide. This bracket is twisted at its points of support for greater stiffness and is bolted securely to the sub-frame. The heavy, stamped clamp does double duty, holding the pedal shaft securely in place and serving as a stop for both pedals in their rearward position. Adjustment of the stop position is obtained by the two bolts which are threaded into the clamp, one from above to form the adjustable reaction point, and the other from below to clamp the shaft in place. A special adjusting washer provides a perfect seat for the clamping bolt. The pad on the brake pedal which contacts the stop is machined for accuracy. The clutch pedal stops against its adjusting bolt. The pedal bearings are made of better material and are of greater length. These improvements with a reduction in the clutch pedal offset insure against undue wear and bell-mouthing.

Each foot pad is covered with a rubber cushion having a bead around its edge and corrugations moulded in its surface. These insure greater comfort and safety, preventing fatigue and providing a more secure grip for the feet when operating the pedals.

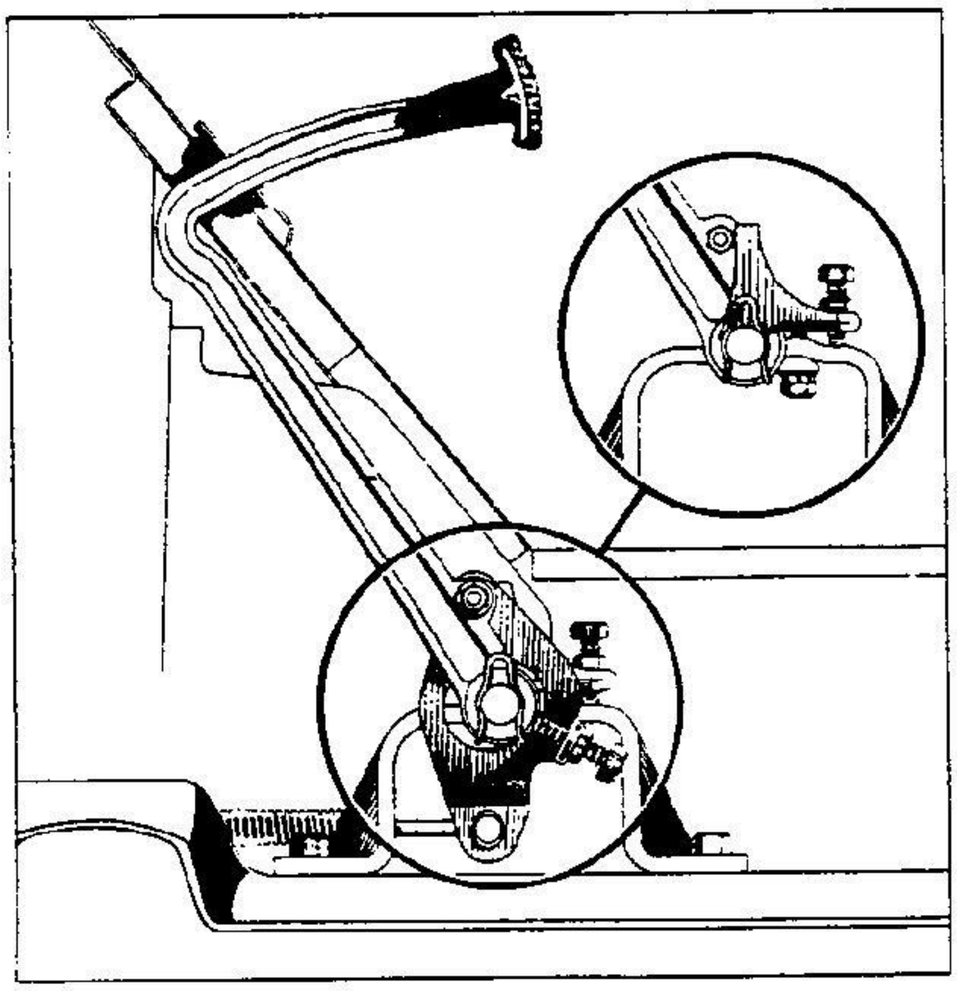

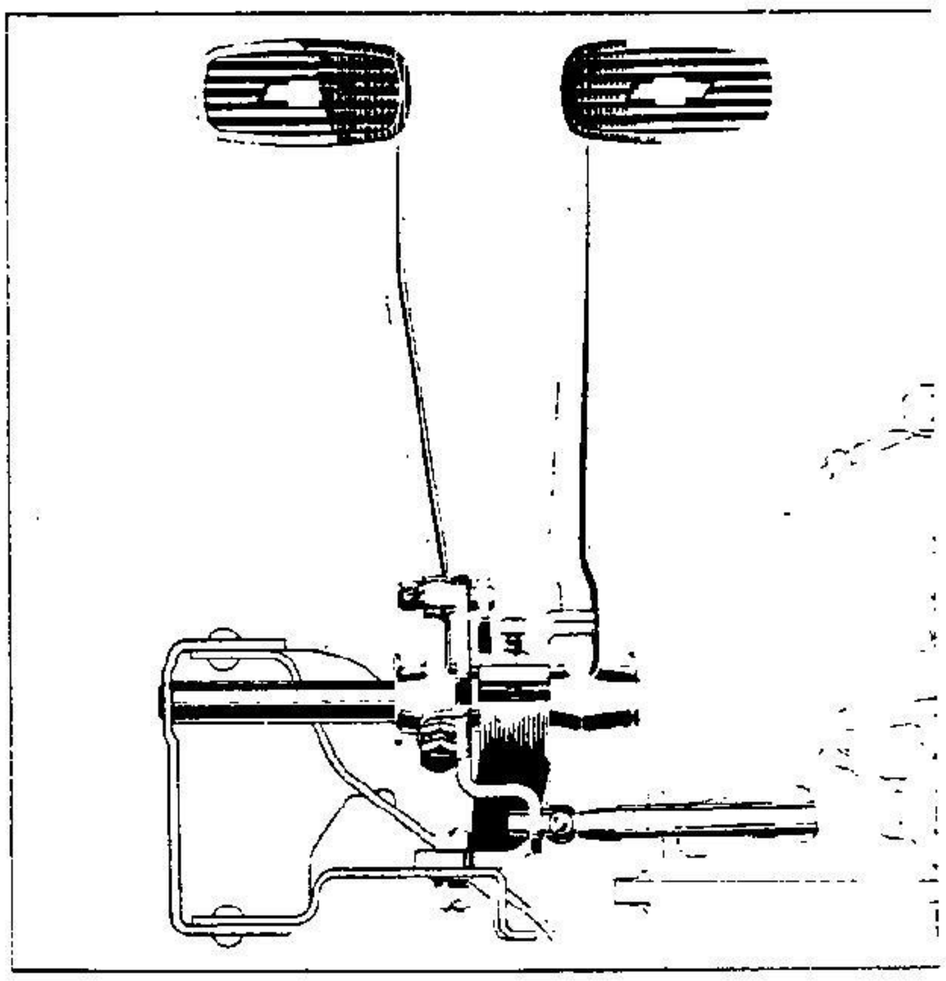

CONTROLS

The accelerator control is improved by the addition of a hinged pedal which is long and narrow with a gracefully rounded upper end. The pedal is a drawn steel stamping to which a thick pad of corrugated rubber is vulcanized. The edge of the pedal is bound with a polished aluminum rim which adds to its attractive appearance. Rubber is also vulcanized to the pedal at its hinge point and at the socket in which the spherical ended rod seats. This heavy rubber covering has sufficient area to support the driver's foot comfortably and sufficient thickness to provide a cushion against shocks and insulation from vibration. The corrugations prevent slippage of the foot, insuring greater comfort. The accelerator rod is guided in a rubber grommet which is screwed to the toe board. In this grommet, a graphite bushing is moulded in the hole thru which the rod passes to insure easy frictionless movement and proper alignment. A vacuum-controlled diaphragm connects the starter mechanism with the accelerator rod when the engine is not operating and there is no suction in the intake manifold. This permits operation of the starter by depressing the accelerator pedal. When the engine is operating, manifold suction is created and the control diaphragm is deflected, disconnecting the starter control and permitting the accelerator pedal to operate only the throttle valve.

A rubber seal is provided to insulate the transmission cover thru the floor board.

COMPARATIVE SPECIFICATIONS

	1932	1933
Location of pedal mounting	Clutch housing	Frame
Pedal bearing material	Brass	Bronze
Pedal hub length	1 5/16	1 7/16
Clutch pedal arm offset	2 3/8	23/32
Pedal pad surface	Forged steel	Moulded rubber
Accelerator control	Metal button	Rubber covered pedal
Starter control	Separate switch button	Connected with accelerator control

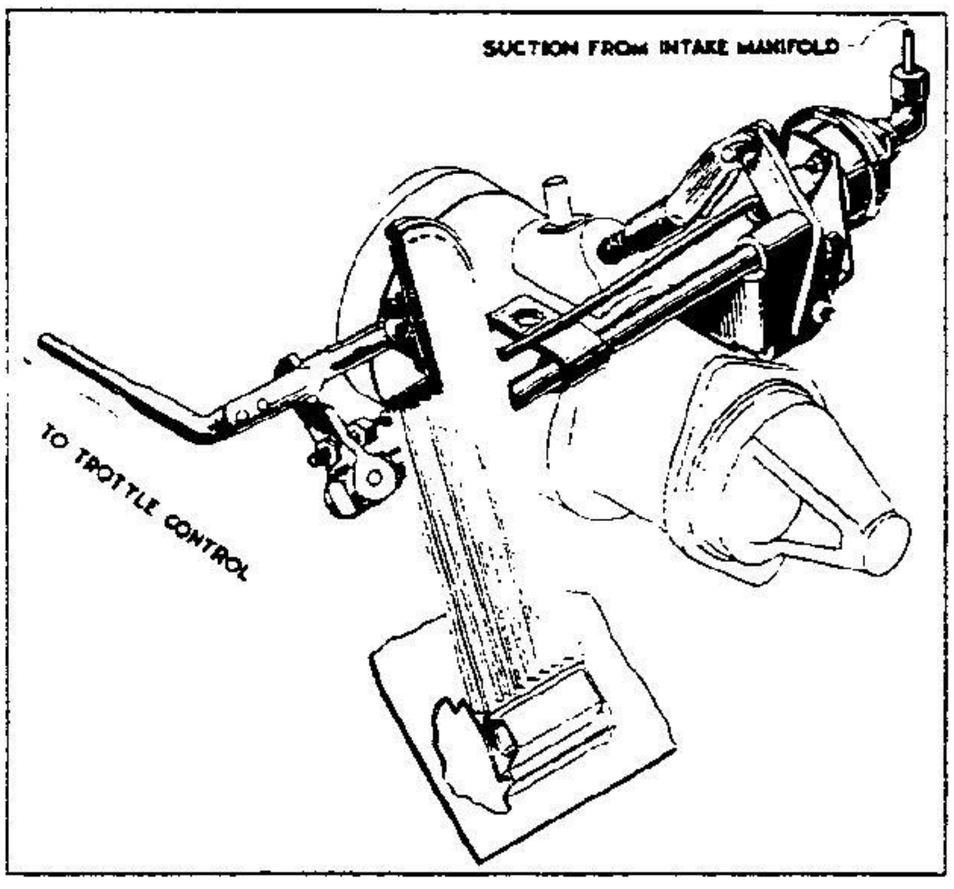

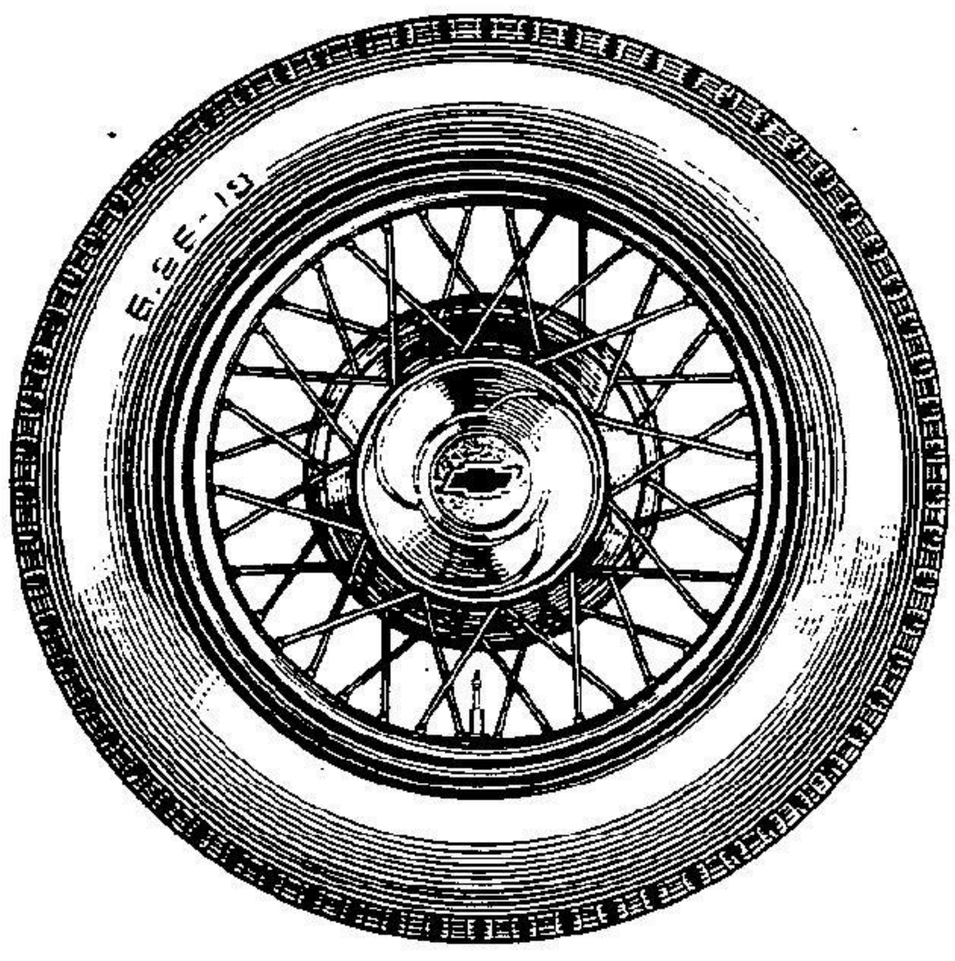

WHEELS

The 1933 hub caps are larger in diameter and more attractive. They are brilliantly chrome plated. The Chevrolet emblem at the center is filled with "Chevrolet blue" enamel bordered by a raised bead. The emblem is set on a hammered background which has a bright, raised outer ring. From this ring it slopes

outward, blending into a graceful, crowned, spiral tri-form. This in turn is surrounded by a narrow depressed rim. Whether stationary or in motion these caps lend a beautiful, lively appearance to the wheels, suggesting a restless eagerness to snap into motion.

COMPARATIVE SPECIFICATIONS

	1932	1933
Hub cap diameter	6 1/2	6 3/4
Hub cap design	Concentric circles	Tri-form

SHEET METAL

In the 1933 passenger line the sheet metal appearance parts are designed as a unit. They harmonize in shape and appearance with each other and with adjacent parts. The general impression gained from the sheet metal is one of continuity of line and surface. The usual appearance of separation at the points where one sheet metal part ends and another begins is entirely lacking. They blend into each other smoothly and graoefully with a marked increase in streamline effect.

STABILIZED FENDER MOUNTING

The unique center-point mounting of the sheet metal at the front of the car, which proved so effective during the past year, is retained in the 1933 models. The single fender support unit supports the front fenders, radiator and headlamps at a neutral point in the center of the frame front cross member. This center-point mounting permits frame flexibility without any of the resulting movement being transferred to the fenders, headlamps or radiator. Since all of the front end sheet metal parts move in unison with each other and with the body, the driver has a visual sense of stability.

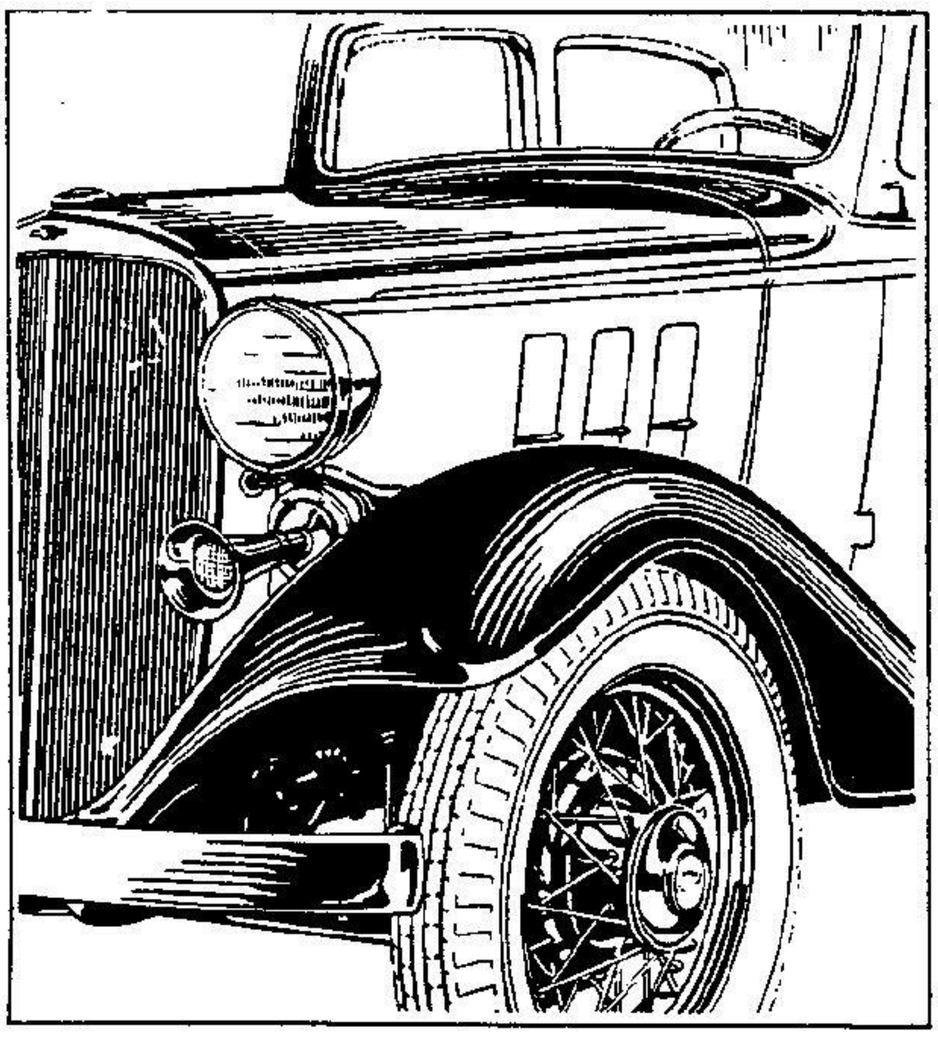

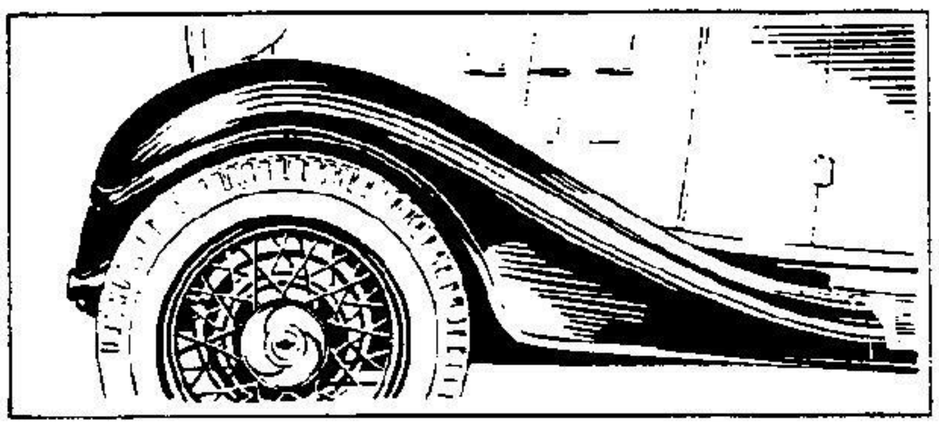

FRONT FENDERS

The front fenders have deeper crowns and extend farther over the tires at the front. The beaded edge of each side flange is wider and smugly follows the tire outline, hiding the spring, steering connections and the underside of the fenders. Skirts under the fender edge at the frame line hide the frame and protect the engine compartment from splashings. The outer flanges of the fenders are braced at their deepest points by rigid pressed steel braces of double-flanged "U" section. They are attached to the ledge below the skirt and at the bottom of the overhanging flange by two rivets at each point.

On those models which have fender wells, the extended flange most effectively hides the usual offensive appearance of the underside of the well. On these models the fender outer flange is braced by a shorter double channel

section stamping anchored at the bottom of the fender well. Toward their rear ends the front fenders merge gracefully into the running boards. The front fenders have all of their corners well rounded and their edges attractively beaded.

RADIATOR SPLASH GUARD

The space between the front fenders and below the radiator is filled by a beautiful radiator splash guard. This stamping harmonizes in appearance with its surrounding parts, curving gracefully to meet the inner skirts of the fenders. It is extended behind the radiator shell and grille up to the bottom of the core, hiding the front motor support and starting crank bracket. It also prevents loss of air thru the bottom of the radiator shell, thus increasing the radiator cooling efficiency. It is reinforced at the upper corners.

RUNNING BOARDS

Each running board and its apron is stamped in a single piece, eliminating the joint between the two separate stampings with the possibility of rust formation and dirt collection. The possibility of squeaks, which might be caused by the two metal parts rubbing together, is also eliminated. The front fender curvature is carried into the front end of each running board, presenting the

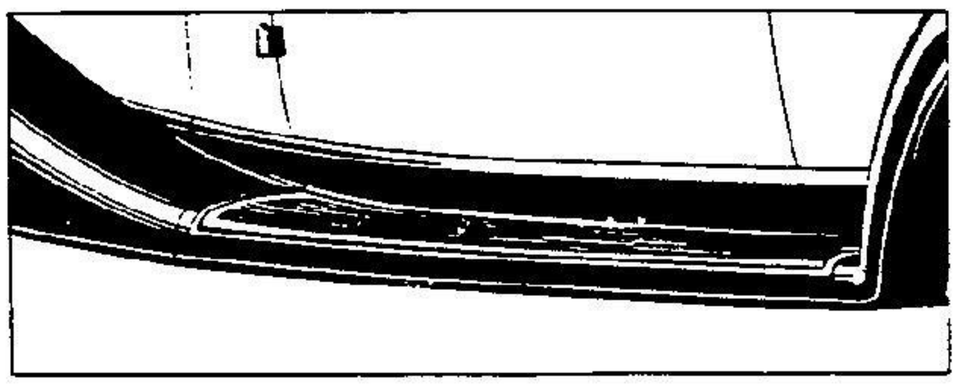

appearance of a longer more graceful sweep and avoiding the appearance of a sharp break at the end of the fender. Each running board is also curved gradually downward toward its outer edge. The running board stamping is deeply ribbed along its outer edge and has a deep channel rib running along its middle. These, with the two depressed channel ribs at the points of attachment to the step hangers, add greatly to the strength and rigidity of the running board. Welded reinforcements at the front and rear ends further increase the rigidity. The center reinforcement extends to the outer edge, bracing and increasing the rigidity of the bead, to protect the car from injury caused by side swipes.

The surface of the running board is entirely covered by a soft, black rubber mat vulcanized on a steel plate to which metal fasteners are permanently attached. The rubber mat has narrow longitudinal corrugations with wide rounded beads at its inner and outer edges. Due to this construction the mat is very easily cleaned. The mat is secured to the running board by fourteen "T" shaped clips which engage depressed slots in the stamped board. The metal surrounding the slots is formed to a cam surface which pulls the mat and its steel backing plate down tightly on the running board when the clips are twisted into place. Alignment of

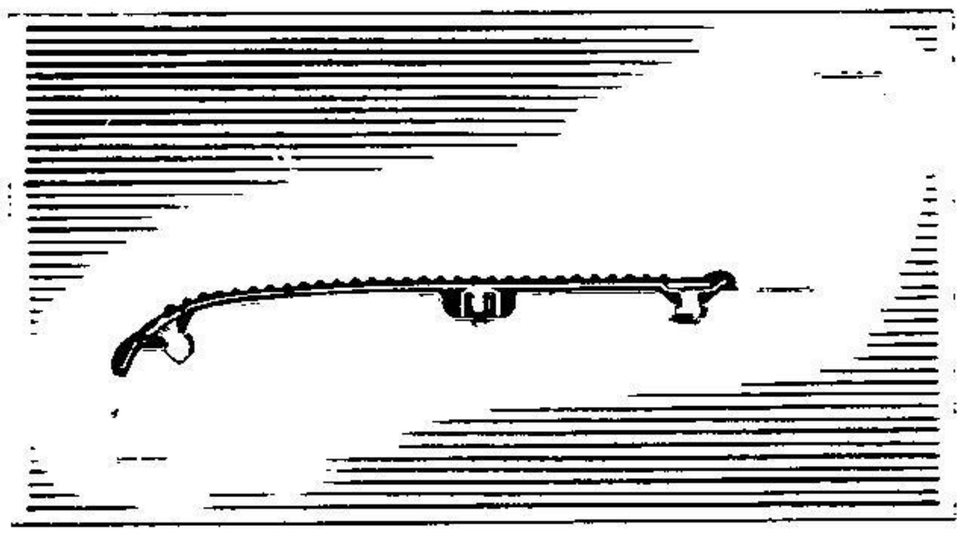

the mat is maintained by an inverted channel reinforcement which is welded to the steel backing plate and extends the entire length of the mat, setting down into the depressed channel in the board. This reinforcement greatly increases the stability of the mat, so that the weight of passengers entering or leaving the car is well supported. Along the channel, three nuts are welded to receive attaching bolts which enter from the bottom of the board to clamp the mat securely in place. Anti-squeak material is clamped between the running board stamping and the backing plate of the mat to prevent any noise which might be caused by the metal to metal contact. Cord-welt anti-squeak is inserted between the front end of the running board and the fender.

REAR FENDER

The rear fenders are gracefully streamlined and have deeper crowns. The edge of each fender snugly follows the contour of the tire to the bottom of the tail end which extends lower, presenting an attractive clean-cut appearance, and hiding the under side of the fender. At the rear the flowing tail surface blends into the rear deck cover. The bead at the fender edge is wider. The deep outer flange at the rear is braced by a stamping of double-channel section. This is riveted to the outer flange and is spot welded to the inner one. This reinforcement also adds rigidity to the stop and tail lamp bracket as one of the bracket bolts

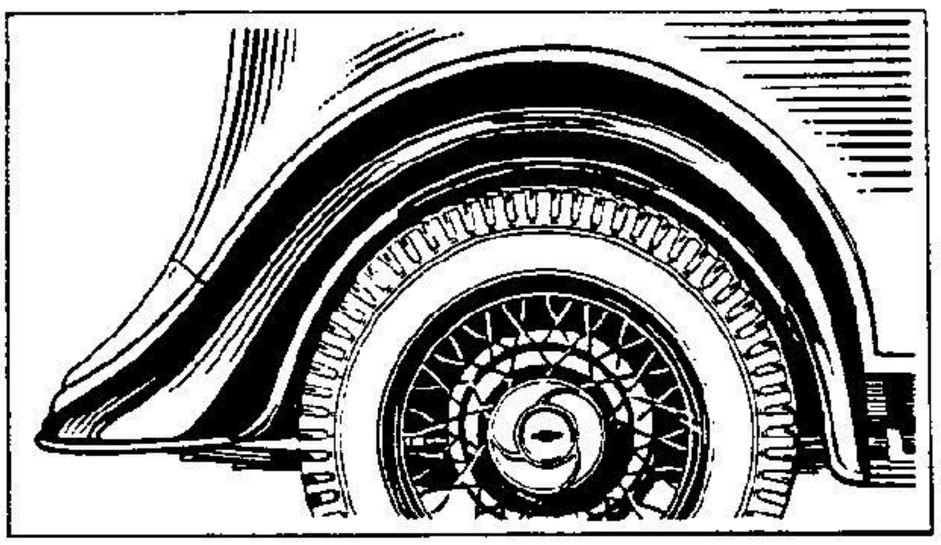

passes thru the reinforcement. At the frame side the reinforcement is rigidly bolted to a sturdy brace extending from the frame. An elongated slot at this point permits the proper alignment of the fender during assembly. A single piece of cord-welt anti-squeak separates the fender fromits adjacent parts. It is inserted between the fender and running board, at the inner edge of which it is turned to follow the contour of the fender, between the fender and the body, and between the fender and the rear deck cover at the end of which it is terminated. Thus, it provides an attractive beading between the fender and its adjacent parts at the same time serving a utilitarian purpose.

REAR DECK COVER

The rear deck cover forms a continuation of the rear body panel, completing its graceful downward sweep and blending smoothly into the fender contours at the sides. Contrary to previous designs it follows the contour of the body and fenders rather than the contour of the frame. At the spring horns the cover is embossed to provide flat bearing points for the attachment of the bumper. The joint between the rear deck cover and the body rear panel is concealed by an attractive beaded anti-squeak which also prevents noises and wear.

HOOD

In the 1933 models the hood slopes gracefully from the radiator to the cowl, blending with the distinctive shape of each. The double body moulding continues along the side of the hood terminating in two,blending, tapering points at the front. The three ventilator doors at each side are longer and narrower. They are manually operated by individual chrome plated handles. The ventilator doors are located toward the rear of the hood and slope in harmony with the body and radiator lines. They swing on internal hinges which are stamped integral with the hood and with the doors. The hinge members

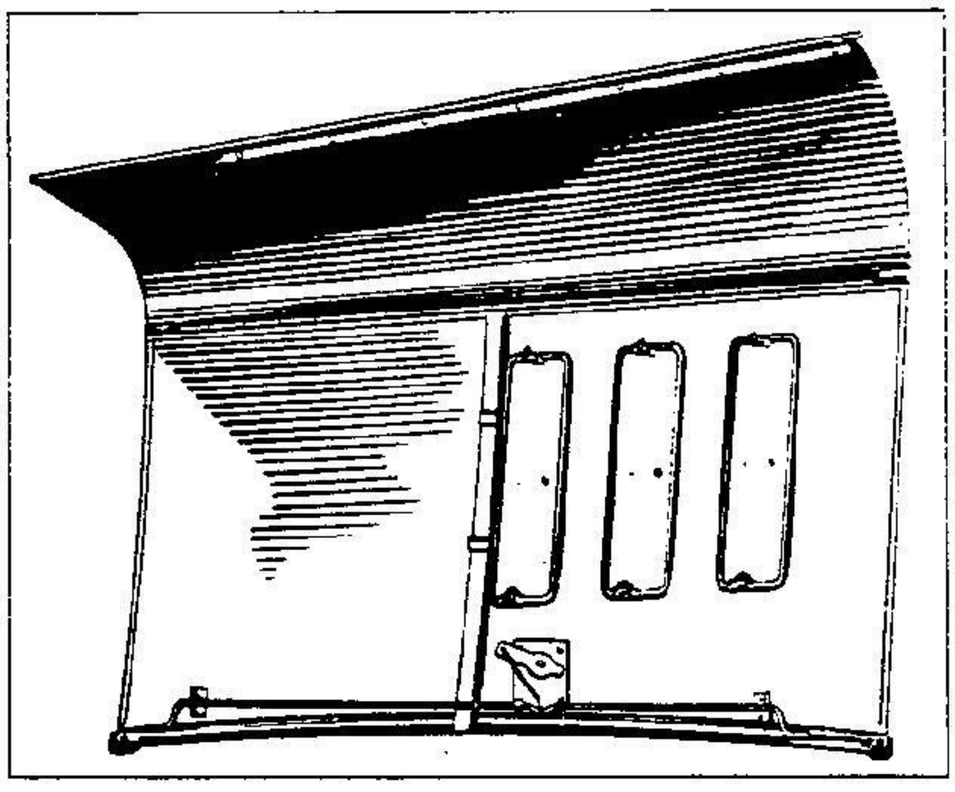

have stamped depressions, the engagement of which holds the doorsin their open or closed position. Stamped, spring steel snap fasteners operating in smooth, grommeted holes form the hinge points. The side panels of the hood are strengthened by internal, vertical, angle section reinforcements which prevent vibration of the hood.
Further reinforcing is afforded by wide ex-

ternal mouldings which extend along the lower edges of each side panel, improving the appearance. Rubber bumpers at each end of these mouldings provide insulation against hood rattles. The upper hinge consists of two continuous stamped members, one of which rotates within the other. The outer member is attractively chrome plated and presents the appearance of a continuous bead. Both hinge members are invisibly riveted to down-turned flanges at the edges of the hood top panels. This design of hinge seals the joint at the top of the hood, preventing the entrance of rain into the engine compartment. The internal hood catch is of the same general design that proved so satisfactory on the previous model.

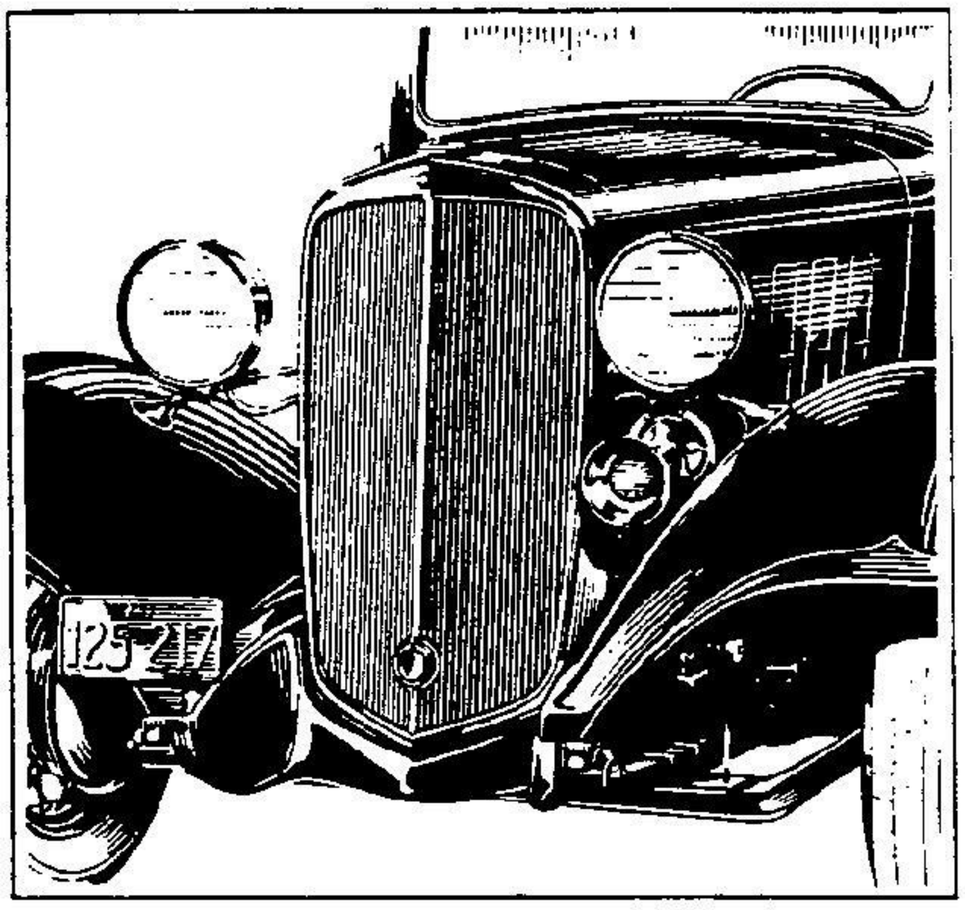

FRONT LICENSE TAG BRACKET

During the 1932 season a new front license tag bracket was added. This bracket is also furnished on the 1933 models. It attaches to the right front spring horn by the same bolt which attaches the bumper. It consists of an upright strap to which a cross bar is riveted. The license tag hides the bracket entirely, presenting a neat appearance which does not detract from the frontal appearance of the car.

ENGINE UNDERPANS

The underpans which fill the space between the crankcase and the frame side rails are redesigned to provide for the new sub-frame structure. In each, a cone-shaped valley extends along the inner edge sloping downward toward the rear and blends into a sloping plane along the outer edge. The underpan on the left side is rigidly reinforced by a cross rib near its center and by up-turned gussets at each end. The right side underpan is likewise reinforced by an up-turned gusset at its front end, by a cross rib near its rear end, and by a down-turned gusset at its rear end. Holes on each side of the cross ribs provide drainage. The underpans are bolted to the sub-frames, side rails and front cross member.

COMPARATIVE SPECIFICATIONS

	1932	1933
Front fender crown depth	4 1/4	5
Front fender moulding width	9/16	3/4
Running board and apron construction	Separate	Integral
Running board mat attachment	Moulded	Clips and bolts
Rear fender crown depth	4 1/16	5 3/8
Rear fender moulding width	9/16	3/4
Hood top hinge type	Piano	Continuous
Engine underpans	Flat, beaded	Conical
Front license mounting	Headlamp tie bar	Front bumper bolt

ELECTRICAL EQUIPMENT AND INSTRUMENTS

HEADLAMPS

The headlamps are of the same general shape as on the 1932 models. Their frontal appearance, however, is improved by the addition of a bead at the inner edge of the rim. This bead terminates in a sharp, pointed raised panel at the top. The headlamps are mounted on short, sturdy supports attached to the fenders and extending to the side of the radiator shell. Each support is a die casting moulded over a steel forging. At its inner end the headlamp support attaches to the radiator tie bar on the inside of the radiator shell. At the outer end it flares gracefully into an elliptical flange which seats snugly on the curvature of the fender. It is tapped to receive a bolt from below which attaches it securely to the front fender support.

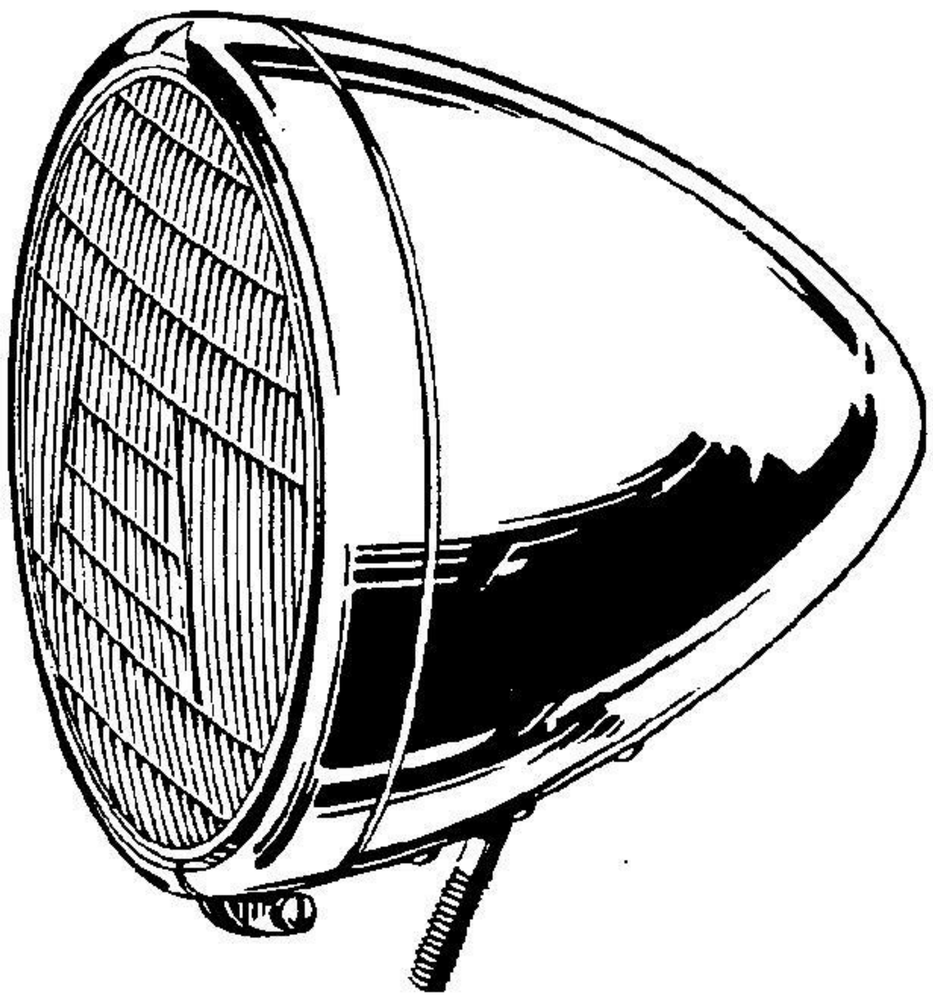

Insulating fiber washers are provided at each end of the supports to preserve the finish of the fenders and the radiator. On each support, a boss having a spherical seat extends forward to support its headlamp. The headlamps have concave spherical depressions at the bolts to engage the bosses and provide universal adjustment. A sturdy bolt, built into each headlamp, holds it securely in place.

COWL LAMPS



The appearance of the cowl lamps on the sport models is improved to match the headlamps. They too have an embossed bead at the inside edge of the rim which terminates in a sharp point.

TAIL AND STOP LAMP

The new combination tail and stop lamp is more attractive, safer and more durable. It is elliptical in shape, with a black enameled body and chromium plated rim and upper bulb shield. The rim has an additional bead at its inner edge which terminates in a point at the top. The lamp sets much lower on the

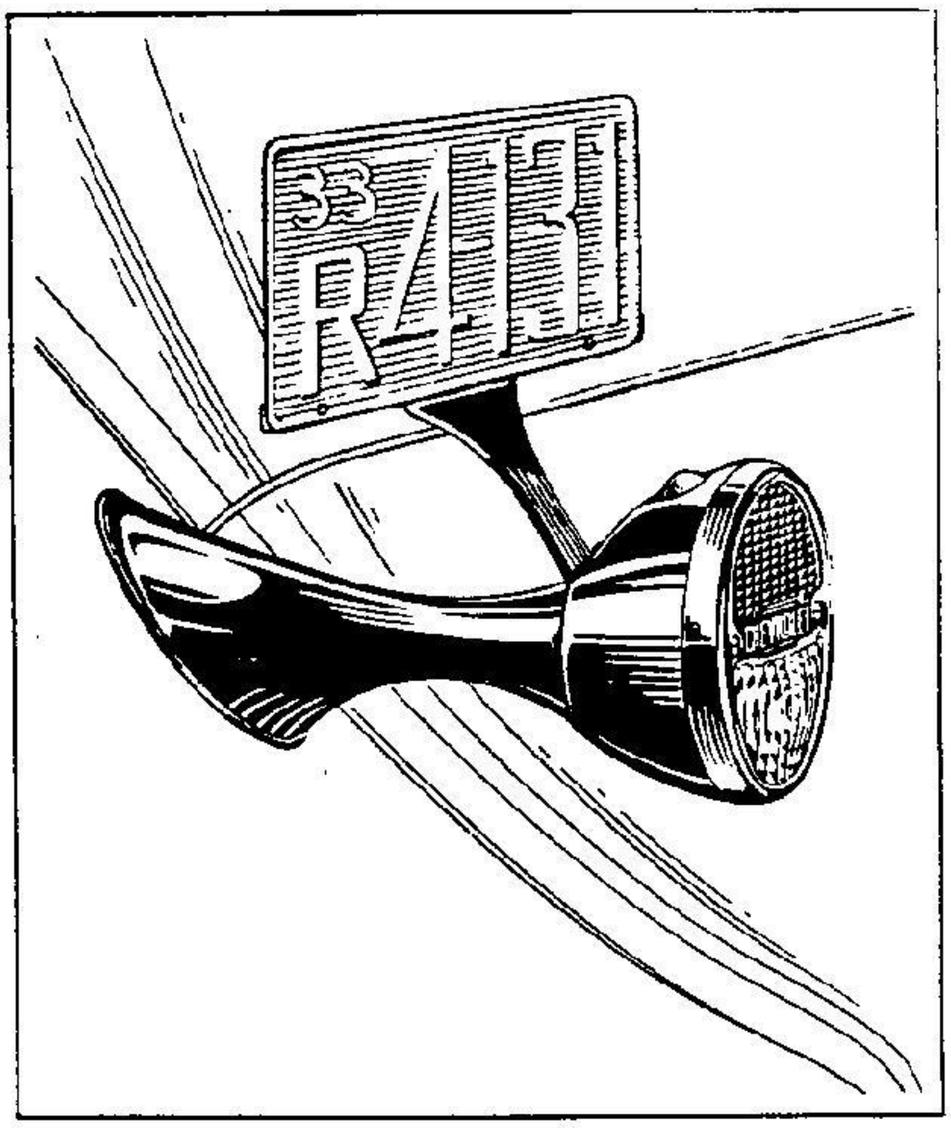

fender and its two compartments are reversed. The upper portion functions as a tail lamp, while the lower is the stop lamp. The lens is of ruby glass moulded with reflex prisms on the inner surface of the upper or tail lamp portion, and with vertical corrugations in the lower portion. At the central portion the lens is depressed to form a panel in which the word "Chevrolet" is inlaid with aluminum. The reflex prisms in the upper half of the lens afford additional protection against collision in the darkness, even when the lights are switched off, by reflecting the rays from approaching headlights, giving the same sort of warning as reflex road markers. The lens is very thick and well reinforced by ribs on the inside. The prisms moulded on the inside of the lens and the proximity of the bulb to the lens, permit the use of a lower powered bulb in the stop lamp, which reduces the drain on the battery. The signals command attention because of their increased brilliance. The upper bulb projects thru the wall of the lamp body to illuminate the license tag which is mounted above the lamp. It bears against a resilient rubber grommet. In this position it is less likely to be damaged.

The tail and stop lamp is mounted on a short, rigid stamped bracket of elliptical section. The terminals which connect the wires to the tail and stop lamp are of the bayonet lock type arranged so that only the correct wire may be connected at each terminal point. The wires are concealed within the bracket. At its point of attachment to the fender a rubber pad insulates the bracket from the fender, absorbing vibration and shocks and eliminating noise.

STOP LAMP WIRING

The stop lamp derives its current from the ignition circuit and is operative only when the ignition switch is turned on. This is done to prevent excessive operation of the stop lamp and the consequent drain on the battery when parking with the brake set. With the new cut-in parking brake system the stop lamp switch is operated by both the foot pedal and the hand lever. With the stop lamp connected to the lighting circuit as heretofore the stop lamp would be illuminated whenever the car was parked with the brake set. This improved arrangement of the wiring leaves the stop lamp circuit unprotected by the lighting circuit fuse. Therefore, a separate fuse is introduced in the stop lamp wiring. It is identical with the lighting fuse which is mounted on the lighting switch,

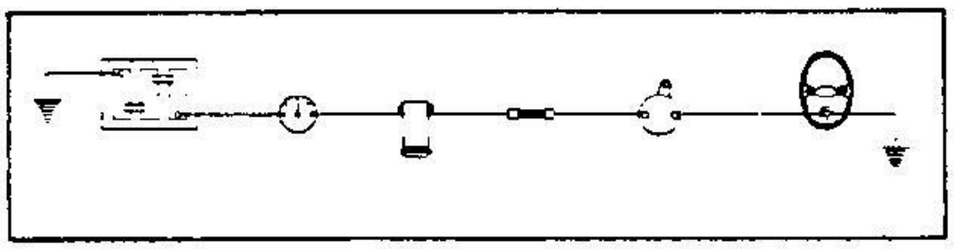

and is encased in a metal cartridge made in two pieces which are held together by a bayonet lock. This fuse is located under the cowl in the wire leading from the ignition switch to the stop lamp switch. It insures greater protection against fires in case of a short circuit in the stop lamp wiring.

HORN

The chromium plated, trumpet type horn is mounted on an attractive stamped bracket attached under the headlamp support. The protective screen in the bell-mouth of the horn is concave instead of convex to insure more permanent attachment.

A moulded rubber cover fits over the wire ends and the terminal screws on the horn to protect them from the elements and prevent short circuits.

IGNITION LOCK

With the adoption of the vacuum spark control it is necessary that the ignition distributor be permitted to move freely with very little effort. This requires the elimination of the stiff, heavy armored lock cable from the distributor because of the restriction to motion which it imposed. In the 1933 models the ignition wiring and units are therefore revised to permit the locking of the coil lead instead of the distributor lead. With this new arrangement the heavily armored cable from the ignition switch connects to the ignition coil, which is mounted on the engine side of the dash. When the ignition switch is locked the coil circuit is

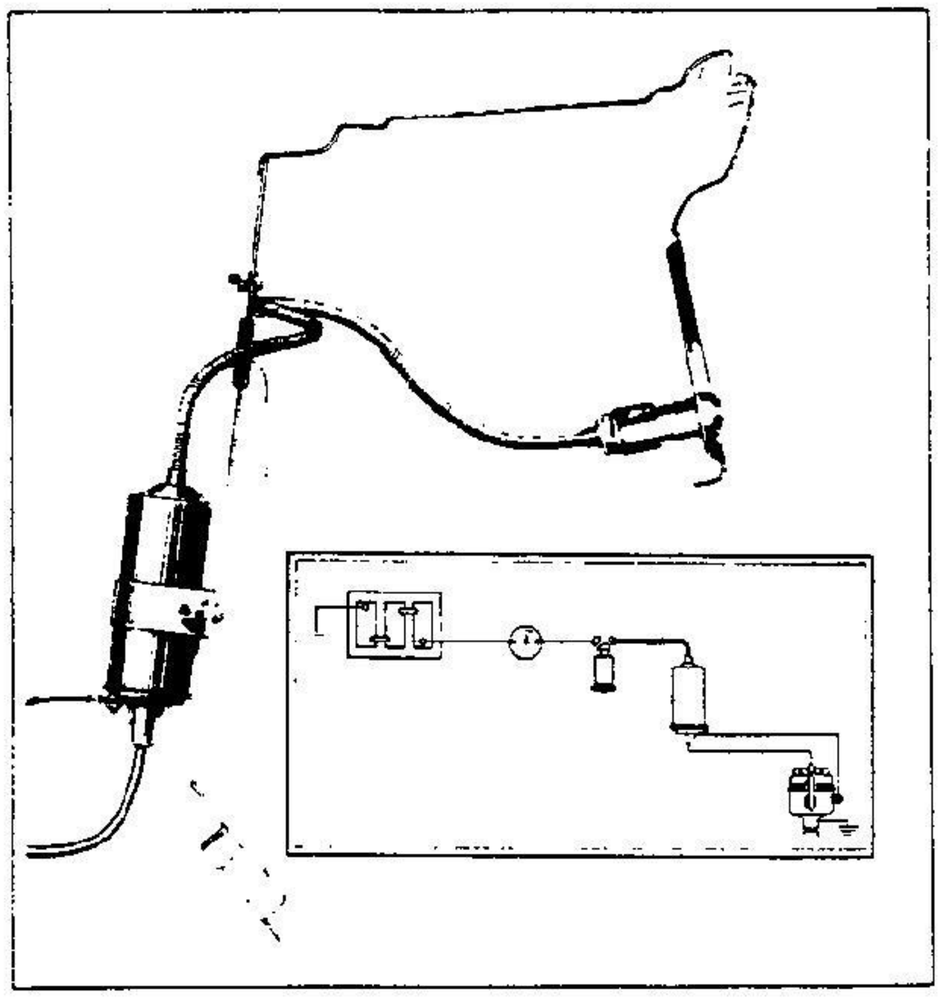

grounded and the flow of current to the coil is prevented. The terminal for the switch connection is of the permanent snap type which prevents disconnecting from the outside of the coil when locked. To defeat this lock is a very laborious operation requiring considerable time and the partial destruction of parts of the ignition system.

INSTRUMENTS

The entire instrument panel is redesigned and improved in appearance. Due to the adoption of the thermostatic heat control and vacuum spark control these buttons are omitted. The panel is semi-elliptical in shape with the border and narrow horizontal stripes chromium plated on a dull black background. Three wider stripes of bright vermilion enamel extend for a short distance each side of the ignition lock. All of the instruments give their indication by means of a moving needle. This type of indication is consid-

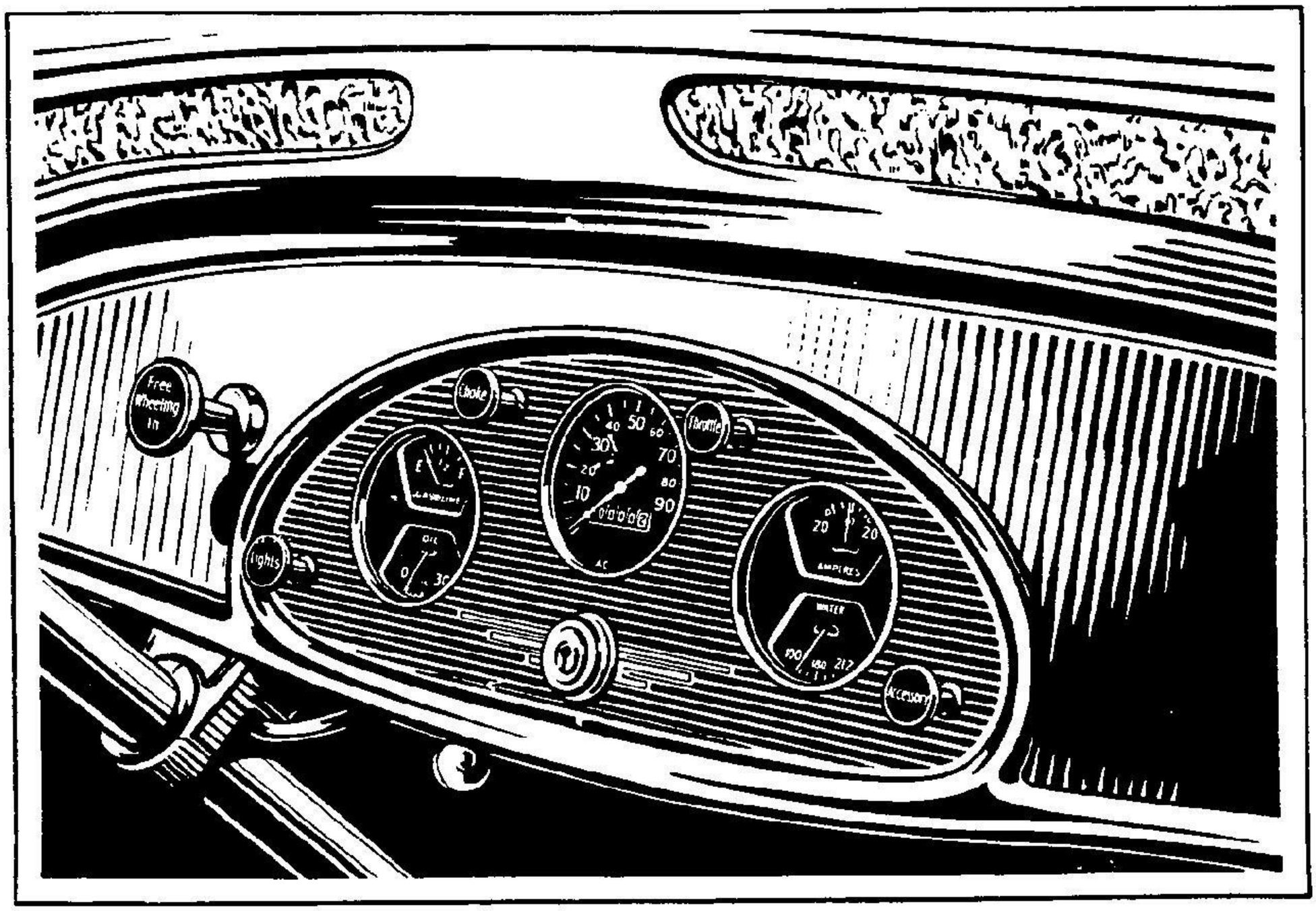

erably easier to read than rotating cylinders and other forms of indication in which the graduations and figures move in relation to a fixed pointer. The motorist very quickly becomes accustomed to the fixed position of the graduations and is able to read the gauges and meters at a glance by the position of the needle or pointer. Thus his eyes are off the road for shorter periods and he naturally drives in greater safety. The dials of all the instruments are black with white graduations, figures and pointers. They are framed by bright chromium plated rings which protrude thru the striped finish panel. The spherical bezels which protect the dials of the instruments have a slight curvature to prevent reflections and insure easy legibility. Two bulbs are provided on the underside of the panel to insure adequate illumination of all the instruments. The speedometer is located at the center of the panel with the combined oil and gasoline gauge at the left and the combined ammeter and water temperature indicator at the right. The flexible speedometer drive shaft attaches to the speedometer head by means of a nut identical with that used at the lower end. The holes in which the control units assemble are punched with a flat at the bottom. The control rod housings each have a similar flat to prevent rotation and insure proper alignment of the lettering on the control buttons. The choke button is located above and between the speedometer and the oil and gas gauge. The throttle control button is located at the right, above and between the speedometer and the ammeter, while the lighting switch is located in the lower left hand corner of the panel. At a similar point on the right hand side a dummy button is provided for the installation of any electrical accessory which may be installed. The free-wheeling control button is located to the left of the instrument panel as heretofore.

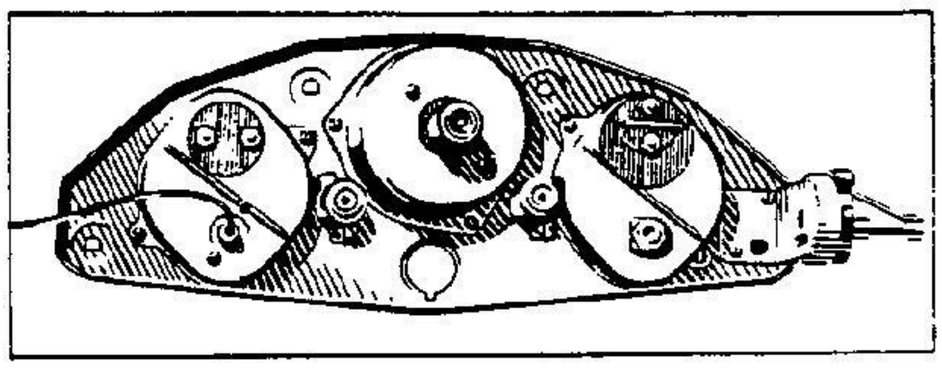

COMPARATIVE SPECIFICATIONS

	1932	1933
Tail and stop lamp lens	Celluloid	Reflex glass
Tail and stop lamp wire connections	Screw	Bayonet
Tail lamp position in relation to stop lamp.	Below	Above
Stop lamp candle power	15	3
Stop lamp circuit fuse	General lighting system	Separate
Headlamp lens rim	Plain	Beaded
Cowl lamp lens rim	Plain	Beaded
Instrument panel finish	Plain	Striped chrome
Speedometer indicator	Stationary	Rotating
Speedometer shaft attachment	Clamp plate	Nut
Oil and gasoline gauge arrangement	Separate	Combined
Instrument bezel radius	6 1/8	10
Provision for electrical accessory	None	Dummy button
Horn terminal cover	None	Rubber
Ignition lock connection	Distributor	Coil
Tail lamp bracket mounting	Metal to metal	Rubber insulated

RADIATOR

The 1933 radiator is entirely new in design, appearance and construction. It is of the popular sloping "V" type, giving an effect of speed which is increased by the general streamlined design of the rest of the car. Its shell is painted the same color as the body, accentuating the hood length without any pronounced line of demarcation at its juncture with the hood. A brightly chrome plated bead on the grille at the apex of the "V" accentuates the "V" formation, and with the chrome plated vertical ribs of the grille accentuates the height of the radiator. The front surface of the shell is broad at the shoulders and curves inward toward the pointed bottom. Its narrow, beaded front

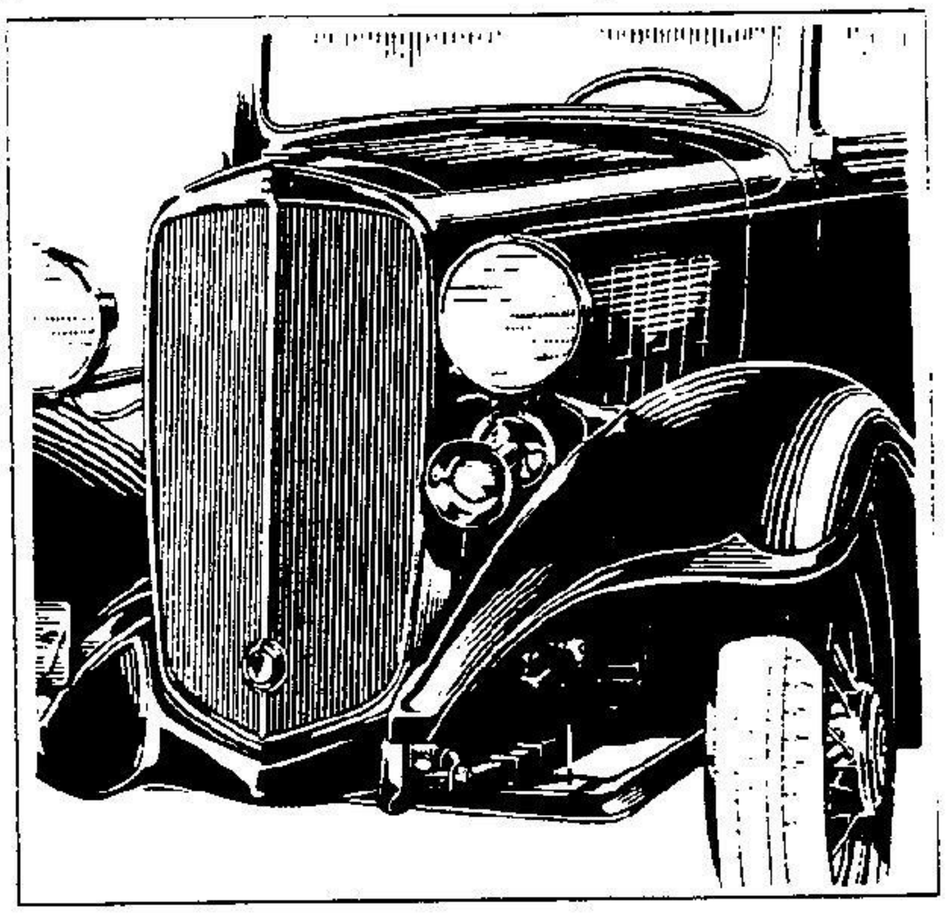

face is brightly chrome plated to form an attractive frame for the grille. The side and top sections of the shell are curved, and are sharply relieved from the front surface by exceptionally sharp embossing and by the contrast supplied by the plating of the face and the painting of the rest of the shell. The Chevrolet emblem in bright blue and silver colors is placed on the "V" apex of the slightly crowned upper front panel. The chrome plated starting crank hole cover is round and shaped to the "V" of the grille. It consists of two embossed steps superimposed on a third step formed by the frame of the hole in the grille. This frame is incorporated in the center bead which extends the entire height of the grille. The grille is integral with the radiator as in the previous model. It is stamped from a single piece of steel in which the many narrow vertical ribs are pressed. In the deeply relieved valleys between the ribs, many holes with curved sides are pierced. The small but strong cross bars caused by this piercing tie the grille together at hundreds of points, also hiding the core from sight while they, themselves, are scarcely visible because of their depth in the grille. This stamped grille is not only more beautiful than grilles of composite structure, but is also proof against rattles and squeaks which might be caused by the loosening of the component parts of the built-up variety. Binder strips extend around its entire periphery, strengthening its edges and providing means for secure attachment to the shell. A "U" section reinforcement at its horizontal center further adds to its rigidity. The radiator shell is reinforced by a construction similar to that used in the previous model. Rigid "U" braces support the shell at the top and bottom, while a brace at the horizontal center behind the core connects the two headlamp supports.

The streamlined radiator cap lies close to the radiator top to form an unobtrusive covering for the filler. It is a chromium plated die casting with a bead around its edge and one thru its center. These beads are wide at the front, gradually decreasing in width and terminating at the pointed rear end.

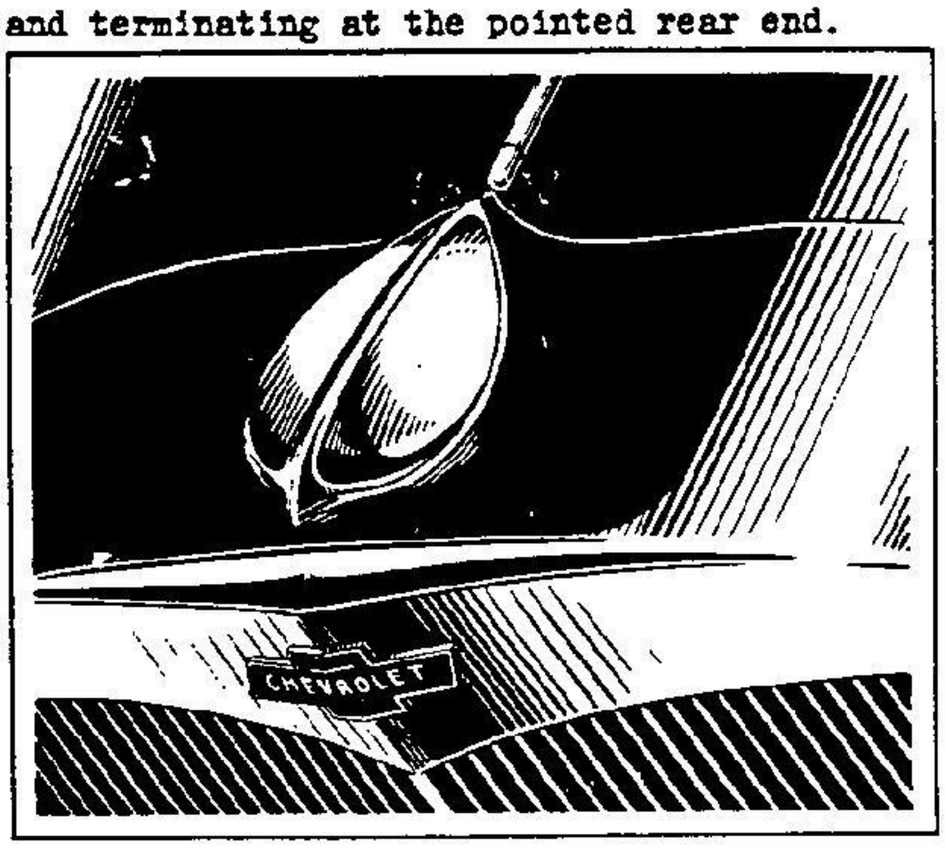

RADIATOR CORE

The new radiator core is scientifically designed to provide better cooling at all speeds, economically combining mechanical excellence with high thermal efficiency. It is greatly strengthened, yet retains the usual flexibility of the cellular types. This unusual strength is provided by the use of rib forms in both tubes and spacers and by the introduction of "knees" spaced at short intervals in the tube walls to support

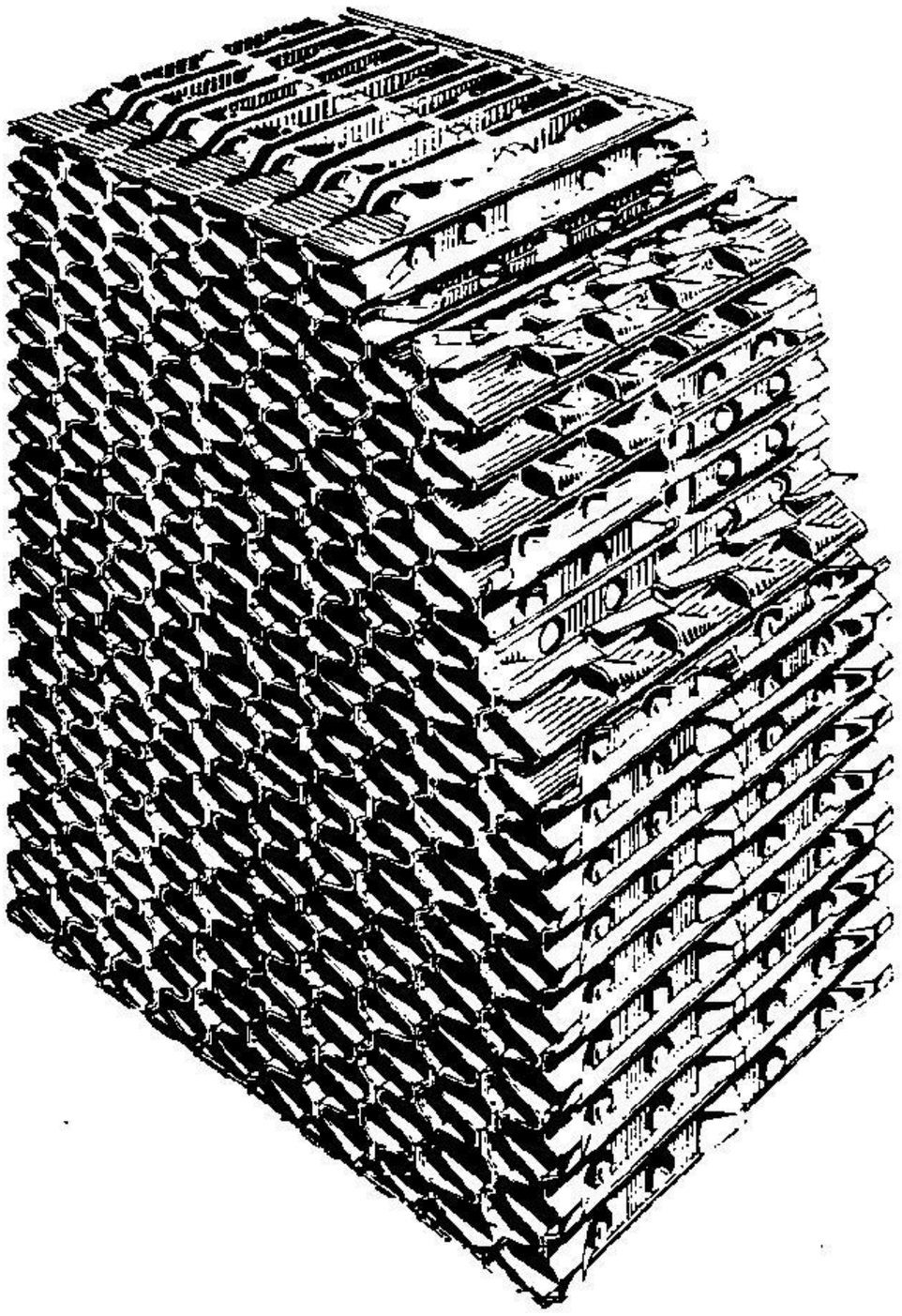

the walls and to maintain the tube area. The tube spacers are firmly located at definite intervals along the tube walls, and both tubes and spacers are provided with broad contact areas, securely soldered the entire depth of the core for maximum strength. These soldered contacts also allow the heat to flow from the tubes to the spacers with high thermal efficiency.

This construction provides an exposed surface per square foot of radiator front which is 18% greater than that in the previous hexagonal core.

Efficient turbulence is created in the air passages by the deflecting action and the vortex producing edges of the louvres. This is evidenced by the unusually high temperature rise of the air as it passes thru the core.

The water passages are of adequate size, being designed with great care to provide sufficient area and to insure a free flow of water to the pump. This free flow is greatly assisted by the rolling contours of the passage walls and by the supporting "knees" which maintain the tube areas.

The possibility of leaks caused by strained metal is greatly reduced by the use of especially processed core stock and by the elimination of sharp bends or angles in the tube walls.

It is thoroughly proved by laboratory tests and by tests under actual operating conditions that this new core dissipates a much greater amount of heat per pound of metal and per square foot of frontal area at all air speeds than the hexagon type of core used in the previous model.

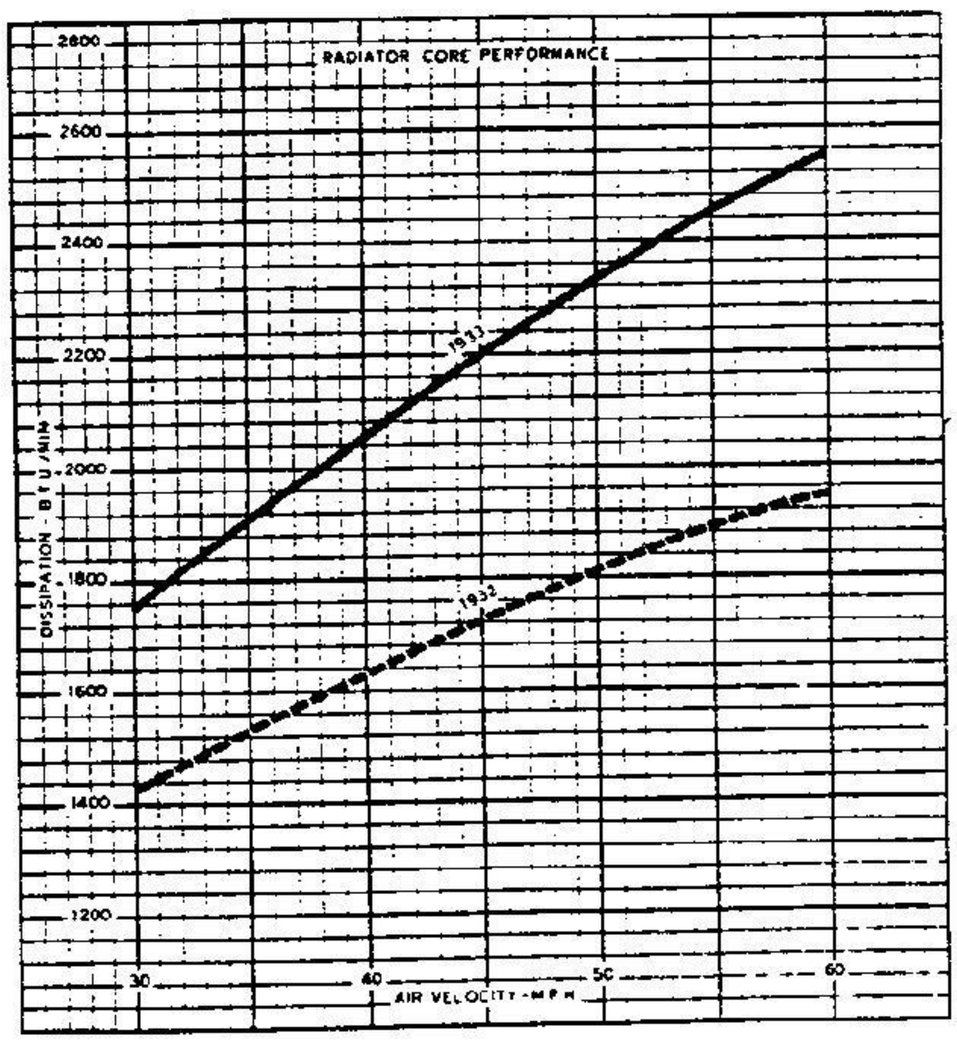

COMPARATIVE SPECIFICATIONS

	1932	1933
Radiator design	Conventional	Sloping "V"
Radiator shell finish	Chrome plated	Composite
Grille center bead	None	Chrome plated
Radiator cap	Round	Streamlined
Radiator core construction	Hexagon cellular	Ribbed cellular

WHEEL CARRIER

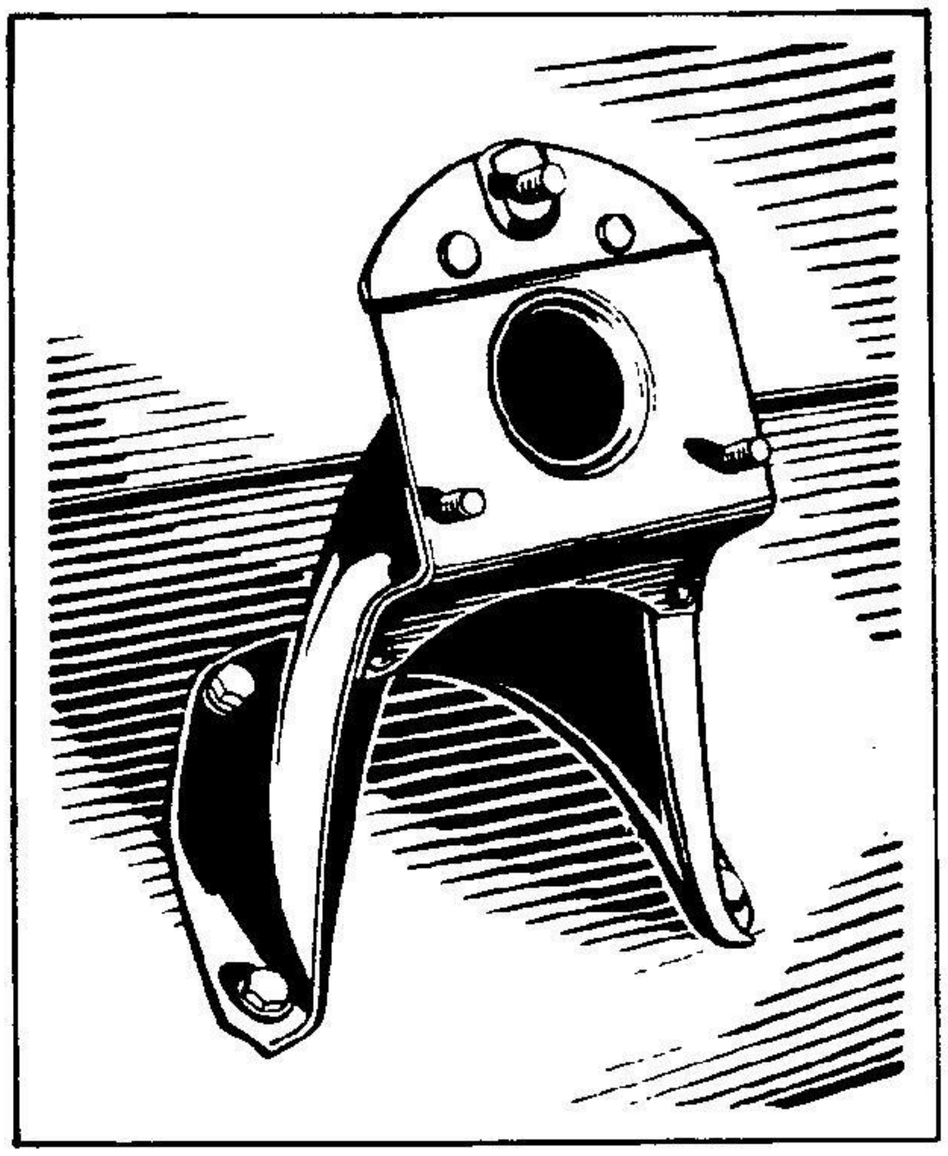

The new carrier for the spare wheel and tire on the rear deck is simpler and more rigid. It consists of an extremely stiff stamping of modified channel section having stiffening flanges at its edges. The wide base flange is reinforced by raised bosses at its four attaching points to the rear cross member. The carrier stamping curves gracefully upward and terminates in a flange to which a reinforcing bracket is secured by four rivets, the lower two passing thru the stiffening flanges of the carrier. Three bolts to attach the spare wheel are permanently anchored in the mounting flange of the carrier. The raised reinforcing ribs which are stamped in the frame rear cross member act as braces for the spare wheel carrier, spreading the load over a large area. They combine with the sturdy carrier to make an extremely rigid mounting which is neat and clean-cut in appearance, carrying the wheel and tire at a greater angle to harmonize with the streamlining of the body. Due to its smooth surfaces and simple construction the carrier is very easily cleaned.

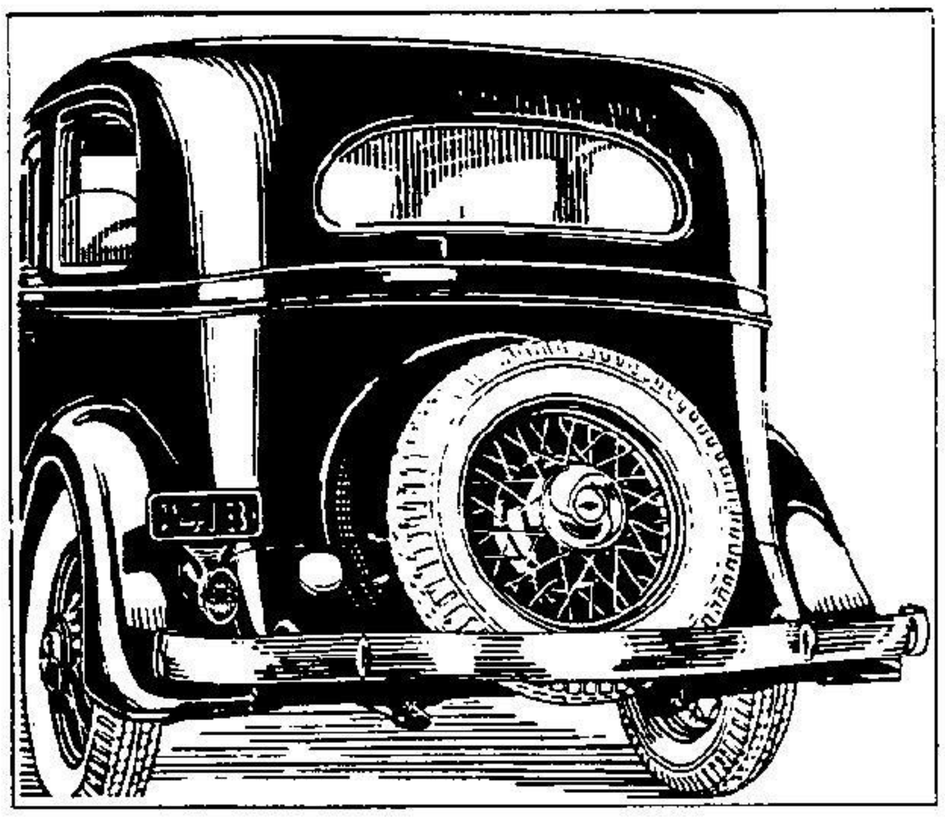

COMPARATIVE SPECIFICATIONS

	1932	1933
Wheel carrier structure	One stamping	Two stampings
Thickness of carrier	1/8	9/64
Thickness of brace	1/8	None

BODIES

The 1933 bodies are entirely new in design, appearance, and construction. They are longer, lower, wider and more roomy. Each of the body types is gracefully streamlined to give a more pleasing appearance, and all provide greater driving comfort. All body lines are smoothly developed, sloping at the front and flowing at the rear.

In the closed models the slant of the windshield is increased. This slant is also incorporated in the upper portion of the hinge pillars and the forward edge of the front doors. The front and rear roof lines are more smoothly rounded while the rear panel sweeps downward and outward to meet the rear deck cover, and to harmonize with the rear fenders. All windows are lower and longer and have more gradually curved corners which conform with the increased curvature of the general body lines. Narrow chrome plated beads frame the glass and add to the smart appearance. The doors extend to the moulding at the bottom of the body and are provided with insulation against drafts, while drain channels in the top of the doors prevent the entrance of rain. The strength and rigidity of the hinge pillars are increased by an improvement in the hinge mounting. The stationary half of the hinge is set deeper into the wood pillar, removing the necessity of notches in the steel reinforcement. The continuous vertical flange adds greatly to the pillar strength. The hinge mounting also is improved by the use of bolts instead of screws at the points of maximum strain. The rigidity of the doors is increased by the very secure welding of the door panel to the heavy steel door flange. The assembly of all the closed bodies to the chassis is more stable due to the use of ten instead of eight body bolts, two of which engage the added frame brackets.

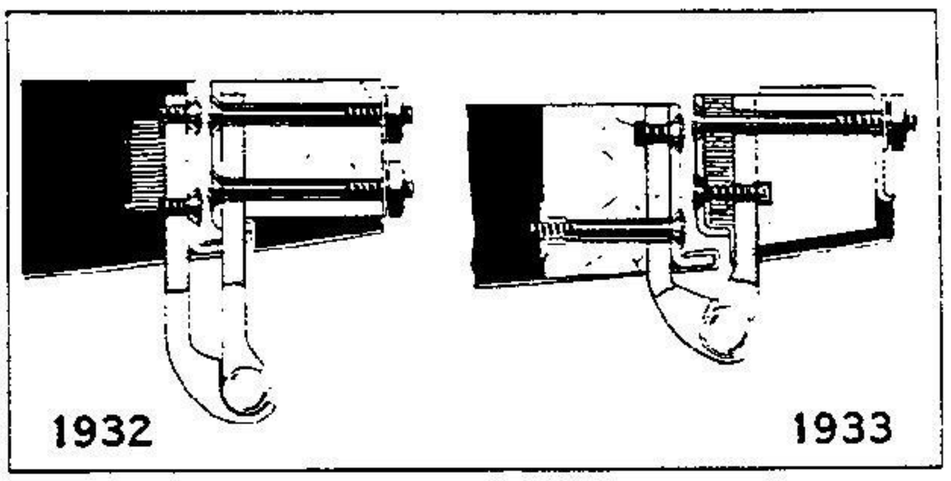

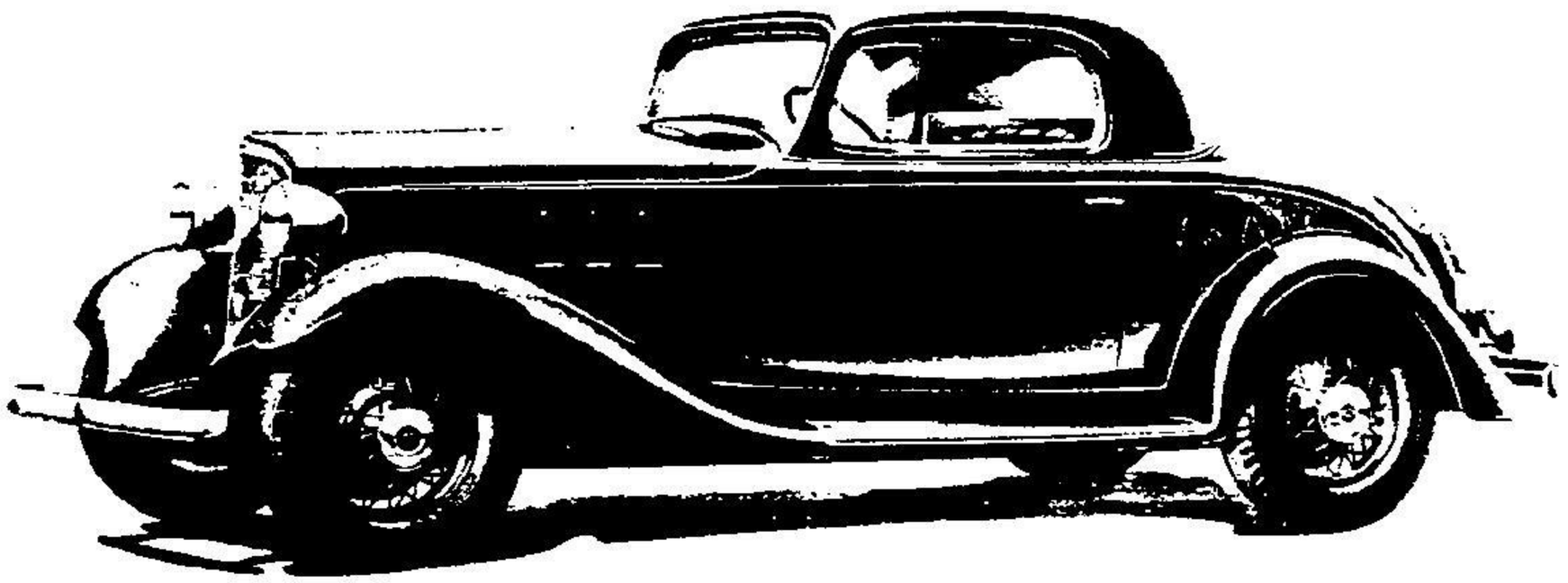

The ventilation system is entirely changed and improved by the introduction of built-in draft deflectors in the front door windows of all closed models and in the rear quarter windows of the sedan. The forward portion of each of these windows is hinged vertically to form a draft deflector. These draft deflectors may be adjusted individually in any direction to provide ventilation without unnecessary drafts to suit the desires of all passengers. They may be operated in inclement weather without danger of snow or rain entering the car. The rear portion of each front window is vertically adjustable as heretofore while the rear portion of each rear quarter window is fixed. In each of these windows, a narrow rubber-lined, chrome plated moulding conceals the joint between the two portions preventing leakage of air and rain when the window is entirely closed. The use of this type of ventilation obviates the necessity of an adjustable windshield. For this reason, and to prevent the entrance of direct drafts, rain and snow,and to eliminate the rattling of operating mechanism, the windshield is permanently mounted in its

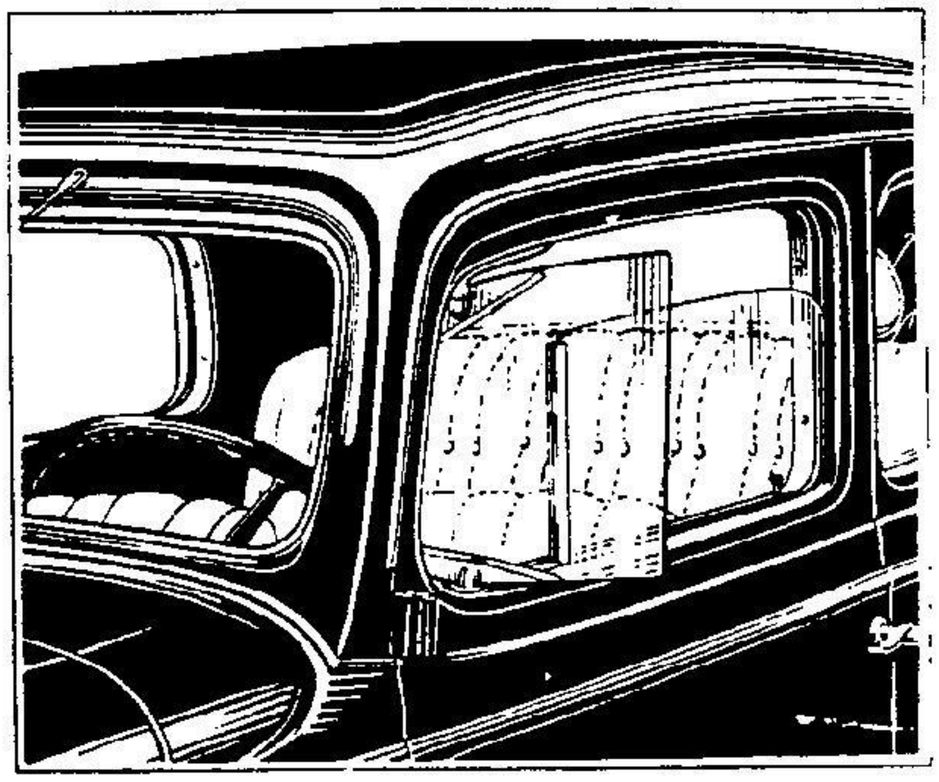

frame. Its increased slope more effectively deflects the glare from approaching or following cars. Shatter-proof glass is used in both front deflectors and in the windshield to insure the safety of the passengers. This glass is so constructed that under impact it may be broken, but cannot be shattered to form sharp points or edges.

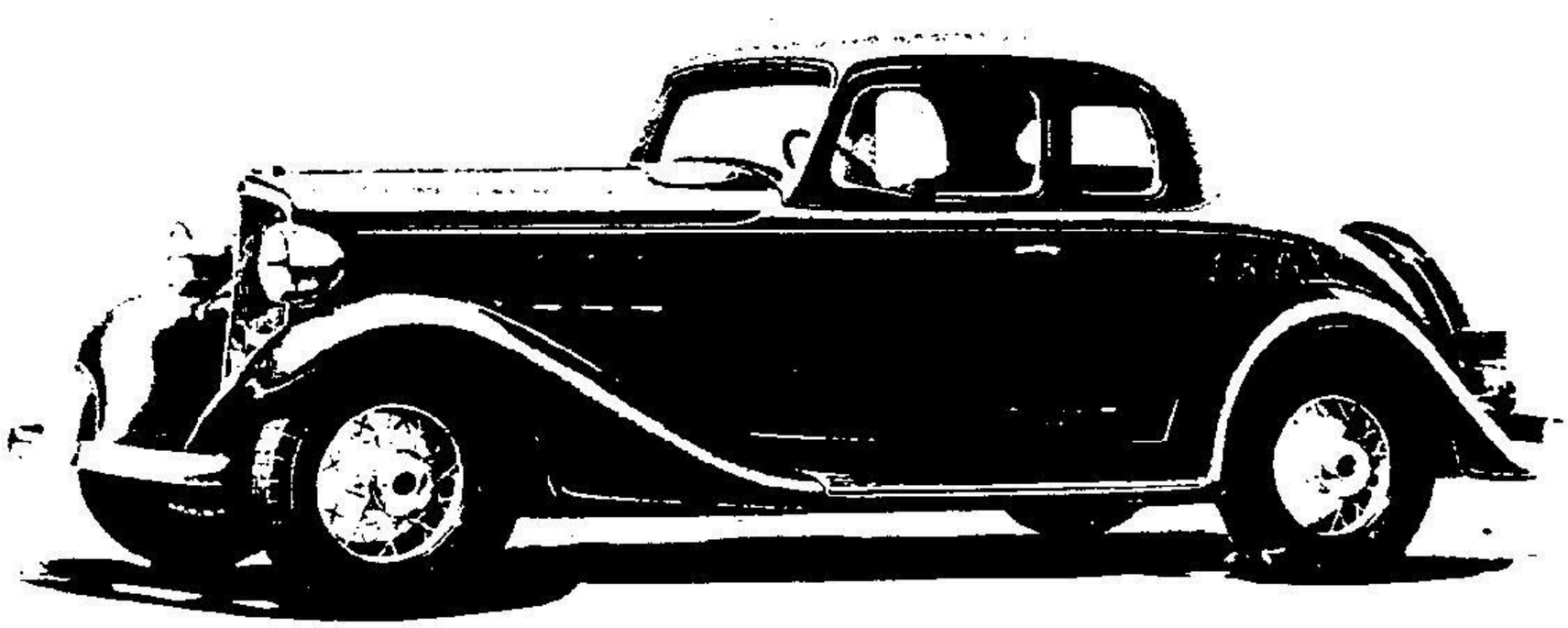

The operating handle of the larger cowl ventilator is located closer to the driver and therefore is more accessible. A screen of fine-mesh wire is mounted on the ventilator door to protect the occupants of the car from insects. It moves up and down as the ventilator is opened or closed, covering the entire opening. The windshield wiper motor is invisibly mounted in the header bar in front of the driver, with provision made in the bar for the easy installation of a second wiper for the front seat passenger. The wiper blade sweeps thru a larger area and parks at the right when not in operation. The sun visor is larger and may be adjusted to any angle from horizontal to vertical to provide proper protection for the driver's eyes. It is supported at both ends to eliminate vibration, and being pivoted at the left front corner of the roof it may be swung either to the front along the windshield header or along the side just above the left front door. Provision is made for the anchoring of the swinging end in the header and above the door. The instrument panel is depressed at an angle to provide a better view of the instruments. It is gracefully curved and attractively panelled and beaded to form a fitting background for the new instrument arrangement. It is painted in the body color with two embossed panels in the upper bar finished to simulate wood. This simulation of wood is also used in the garnish mouldings, all of which

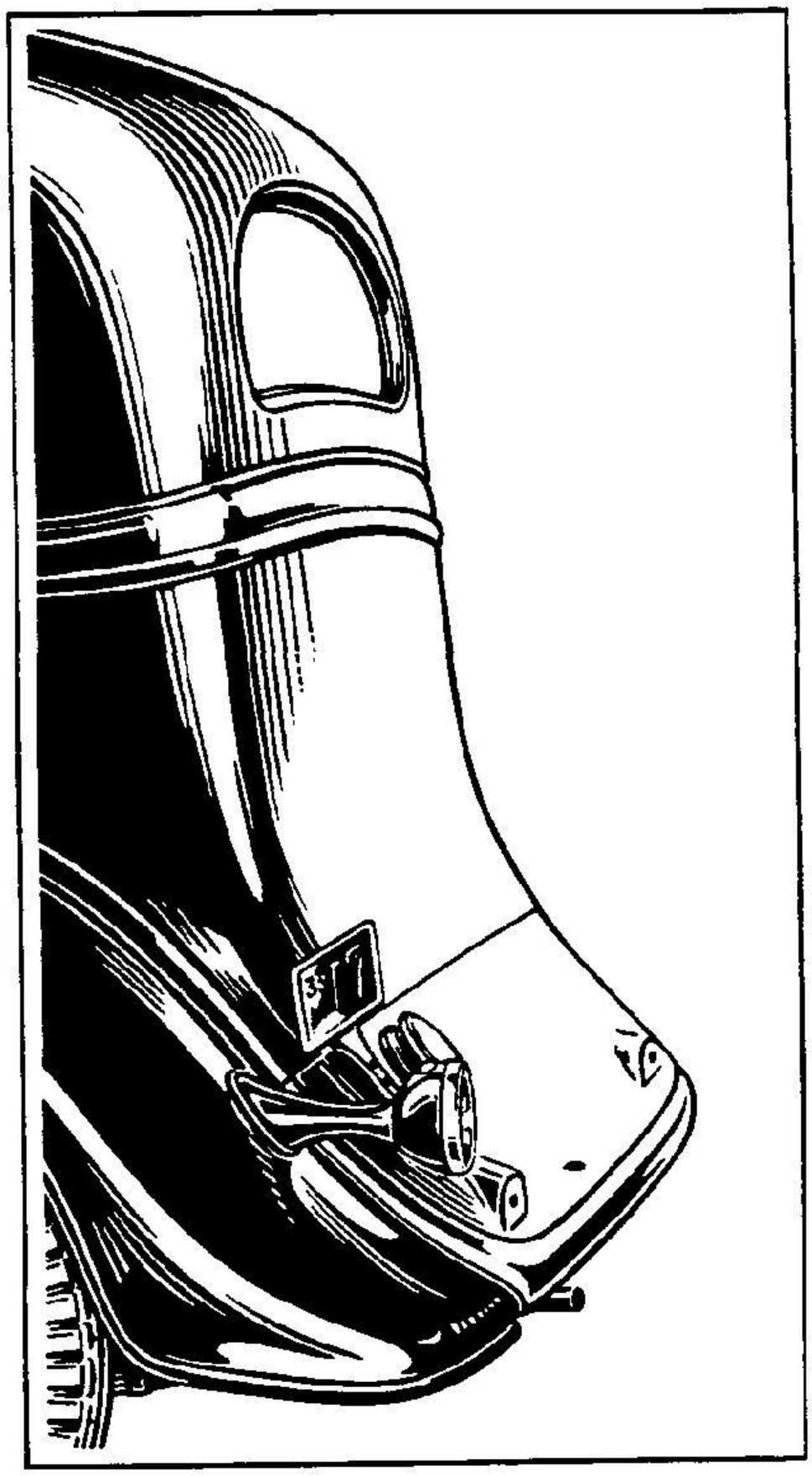

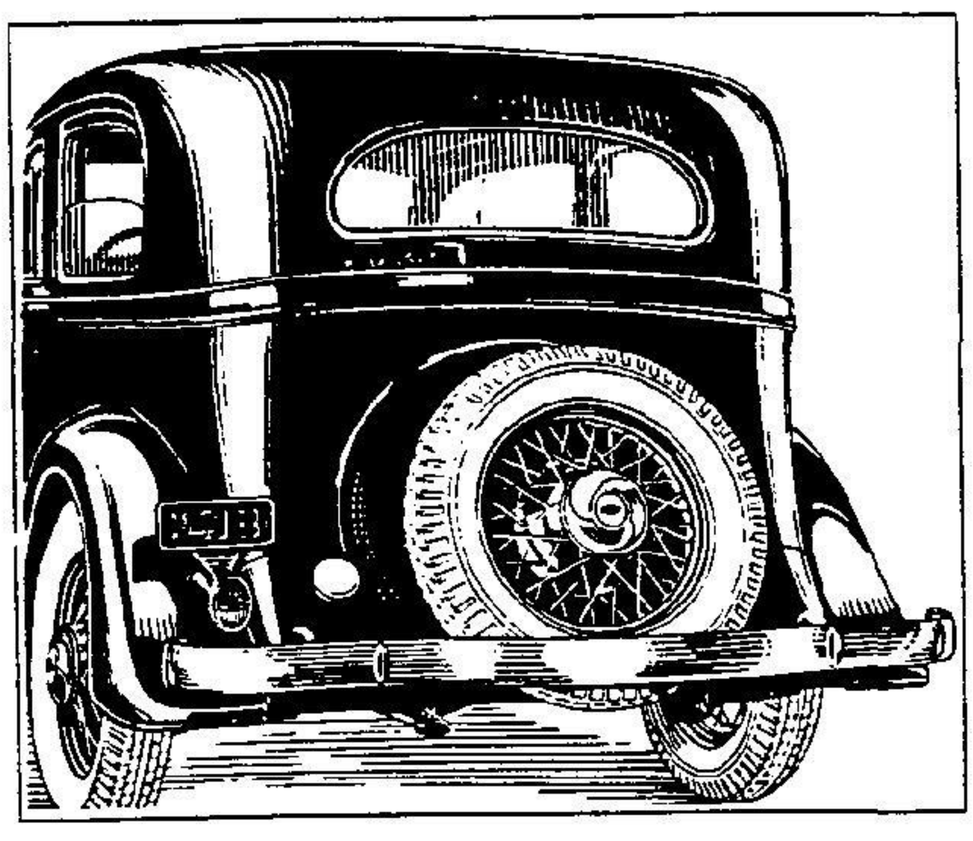

are one piece steel stampings.
Each door is locked individually from the inside of the car by means of a small button mounted in the lower garnish moulding above the lock. The lock functions when the button is depressed and unlocks when it is raised. These buttons are very accessible because of their location. The door locks are of the free-turning type. When the lock functions, the outer handles may be turned without effect, returning automatically to their normal horizontal position when released. All body hardware is chrome plated. The window regulators and the inside remote

door lock handles are of a new plain design with the omission of all unnecessary projections upon which the clothing of passengers might be caught.

Arm rests are provided at each side of the rear seat in both coach and sedan. Assist cords are also provided at the right hand door of the coach and at both rear doors in the sedan. In the sedan, ash receivers, finished to match the garnish mouldings, are located at each side of the rear seat while roller curtains are supplied for the rear quarter windows as well as the rear window. This model is also equipped with a robe rail of the same finish as the garnish mouldings, and with a carpet covered foot rest.

The seat trimming in all closed models is of better material and of distinctive design. In the coach body the front seats are of the bucket type with the backs curved to fit the body. They support the backs of the driver and front seat passenger comfortably, preventing fatigue even on long trips when the same position is maintained for extended periods. The popular finger tip control is now added to the driver's seat in this mod-

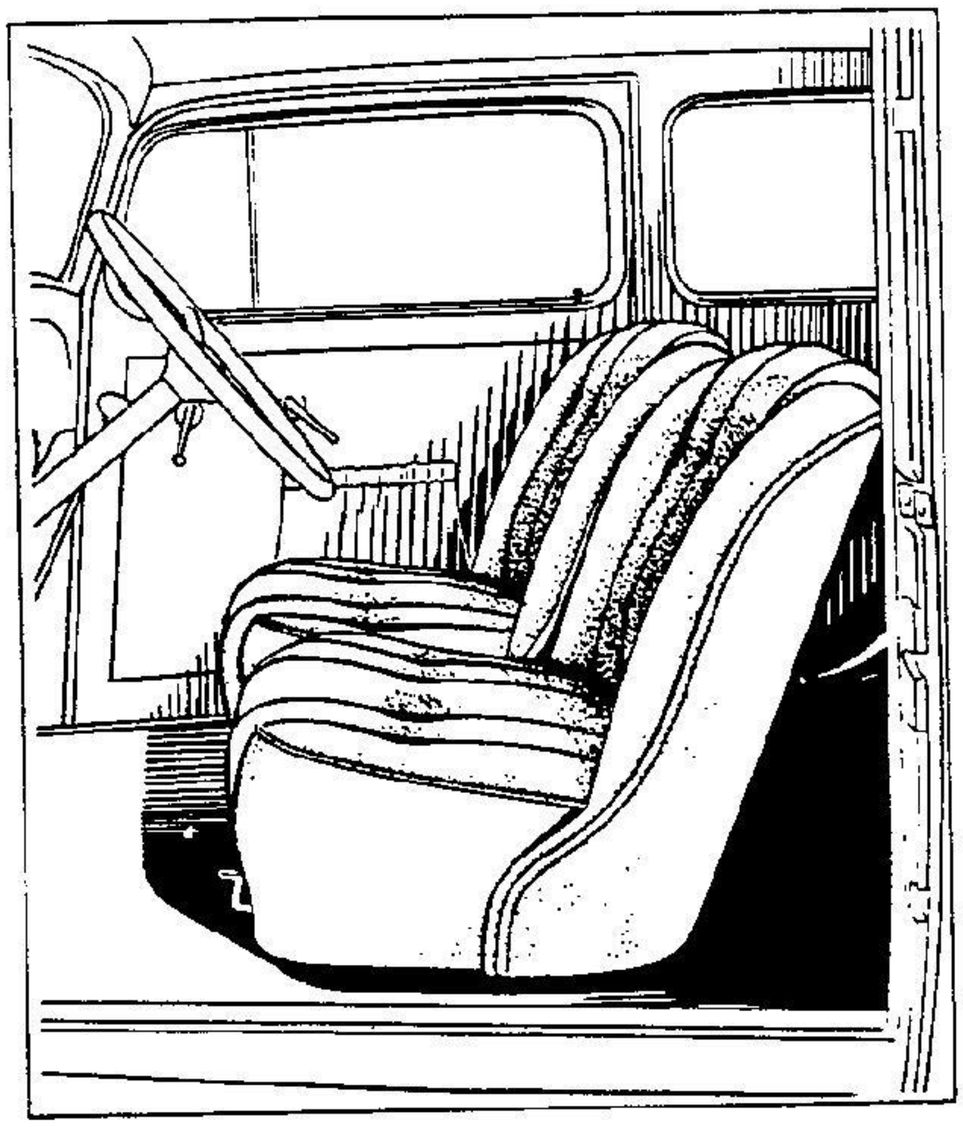

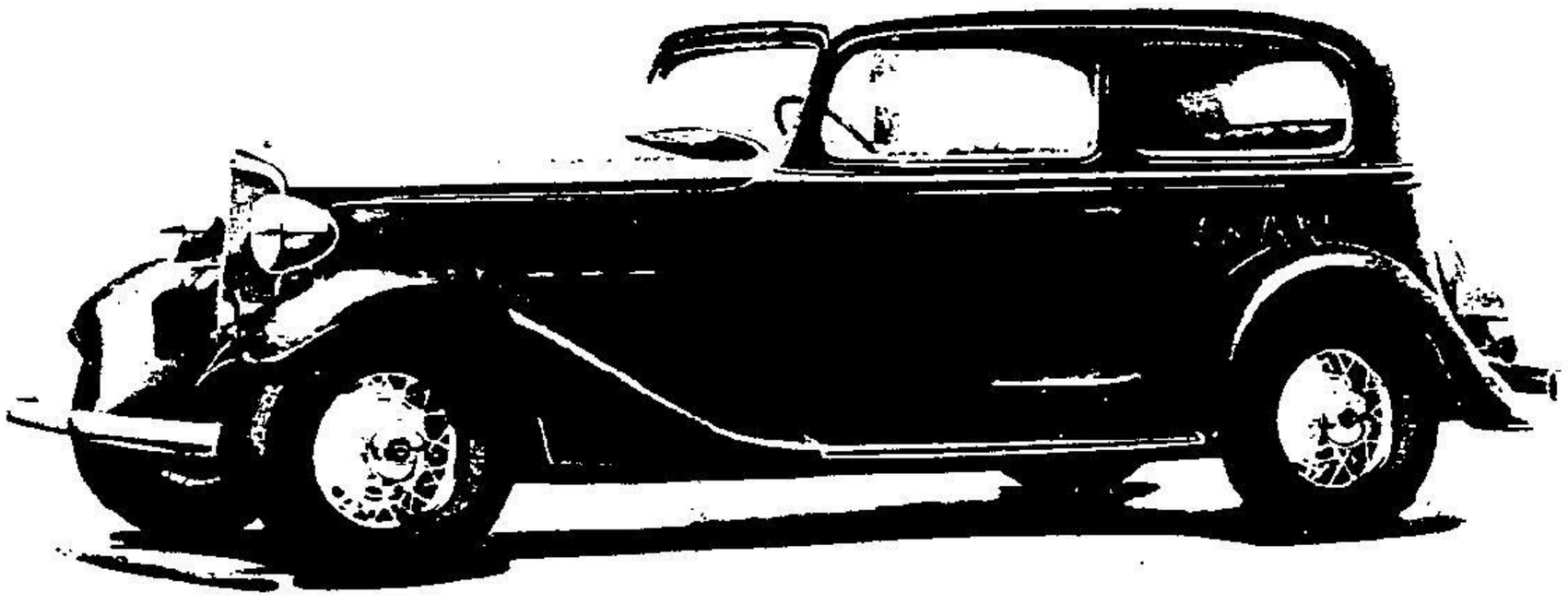

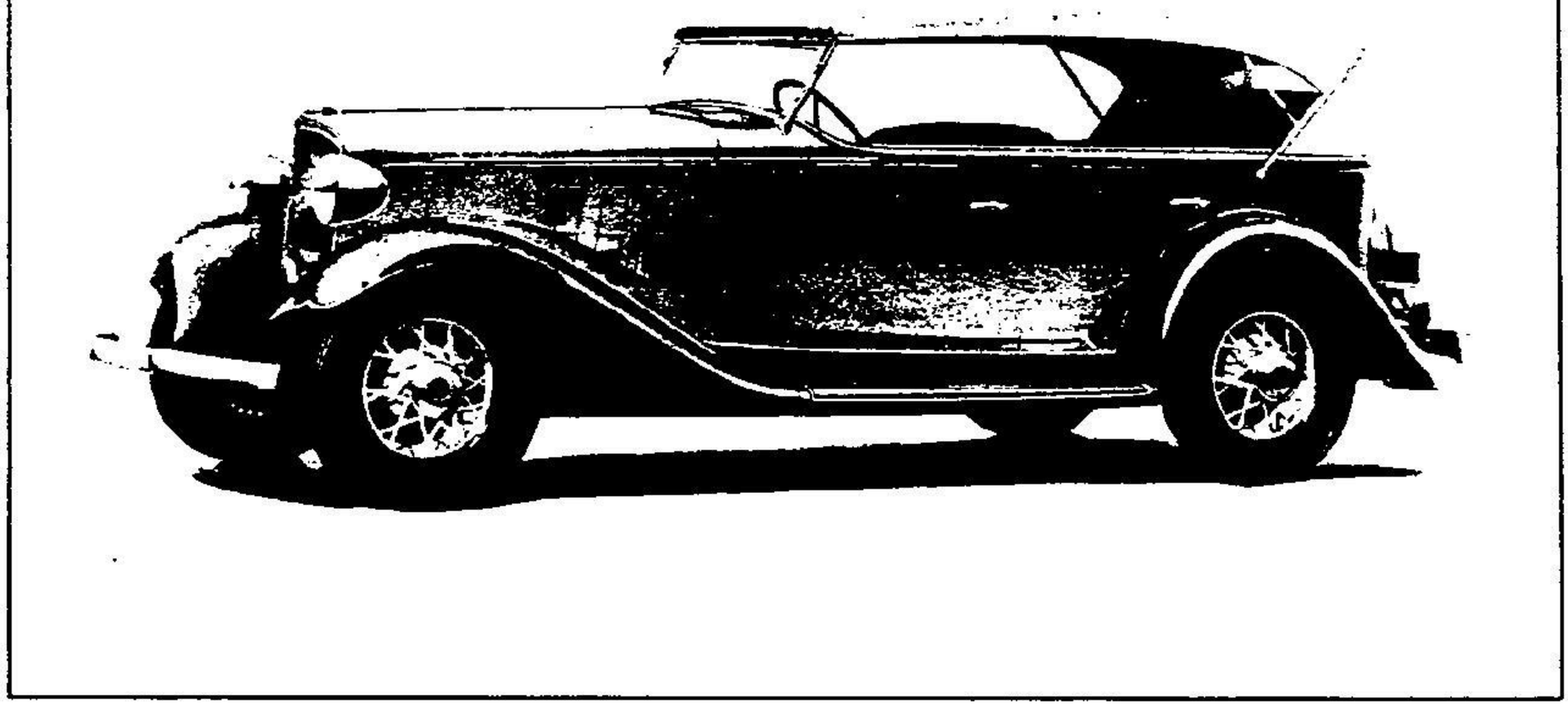

el, allowing the seat to be slid easily backward or forward as in other models. The increased width of the coach doors provides more space for passengers to enter the rear seat. The rubber floor mat in the front of the body is colored to harmonize with the interior trimming. A heel pad of raised vertical ribs is incorporated in the mat below the pedals to provide additional wear resistance at the point where it is most needed.

The open models also share the improvements of the closed body line. They are streamlined and have the same flowing back panel. In the phaeton the belt moulding line flows downward into the back panel, giving a very distinctive appearance. The increased length and width of the bodies provide greater comfort because they provide more leg room, which is also increased in the phaeton tonneau by the use of a lower steel floor.

The seats are tilted at a greater angle and are cushioned both on their seats and backs with a more comfortable spring construction. The cushions are also neater in appearance due to the elimination of the steel cushion retainers. The new cushions are constructed so that they extend over the edges of the framing, resting on sturdy ribbed cross bars which are built into the cushion structure, eliminating the usual seat trap. They are neatly trimmed in imitation leather. The rubber floor mat is colored to harmonize with the trimming and incorporates the same type of heel pad used in the closed bodies. The larger cowl ventilator is equipped with the same type of screen used in the closed bodies. The windshield of shatter-proof glass slopes at a greater angle to afford even more protection against glare. The distinctive instrument panel is designed upon lines similar to those in the closed bodies. The top extends over the sides of the body, providing a greater amount of protection against rain and snow. The top bows are finished in their natural wood color and the rear curtain window is framed in rubber. It is stitched to the back curtain in such a way as to prevent glass breakage and tearing of the curtain. The visibility thru the side curtains is improved as the windows are closer to the windshield stanchions. All doors are sealed at the bottom to prevent drafts.

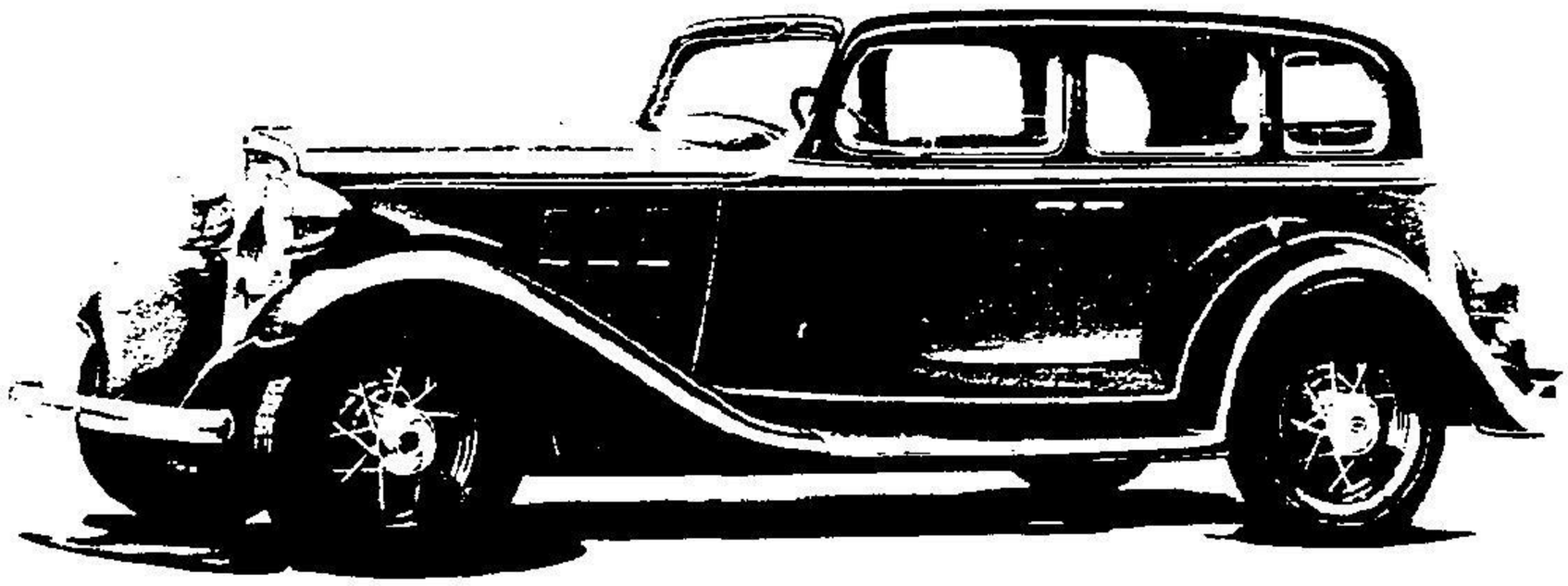

COMPARATIVE SPECIFICATIONS

	1932	1933
CLOSED BODIES		
Body bolts	8	10
Door hinge attachment	Screws	Bolts and screws
Ventilation	V.V. windshield	C.V.Draft deflectors
Windshield slope	10°	19°
Windshield glass	Plate	Shatter-proof
Cowl ventilator length	14 3/4	17 5/8
Protection against insects	None	Built-in screen
Windshield wiper movement	117°	124°
Windshield wiper motor	Visible	Concealed
Door handle locking	Rigid	Free turning
Internal door locking device	Remote handle	Individual button
Coach seat adjustment	Screw	Finger tip control
Sun shade support	Center	Both ends
OPEN BODIES		
Windshield slope	18°	25°
Windshield glass	Plate	Shatter-proof
Cowl ventilator lengtb	14 3/4	17 5/8
Protection against insects	None	Built-in screen

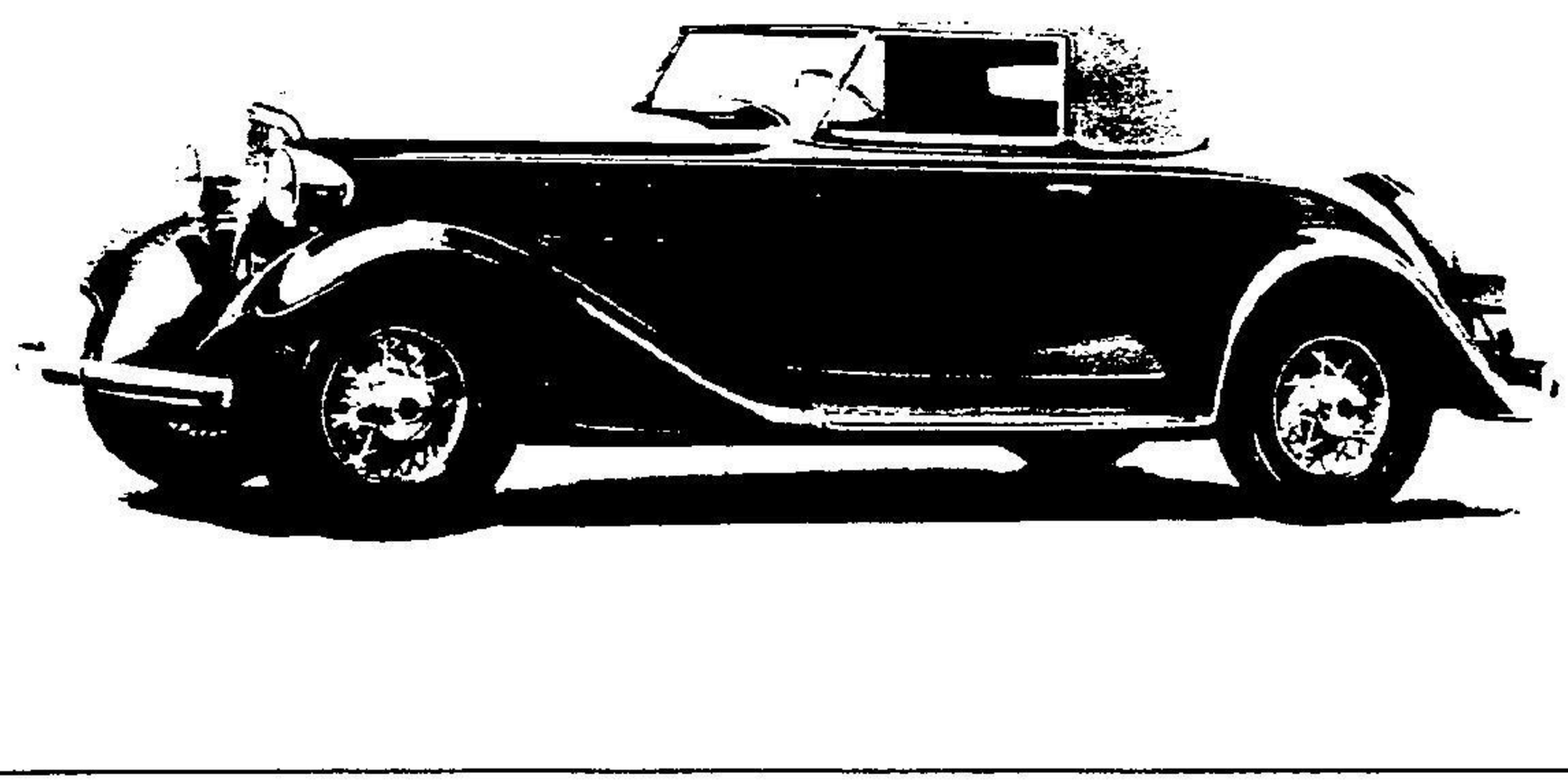

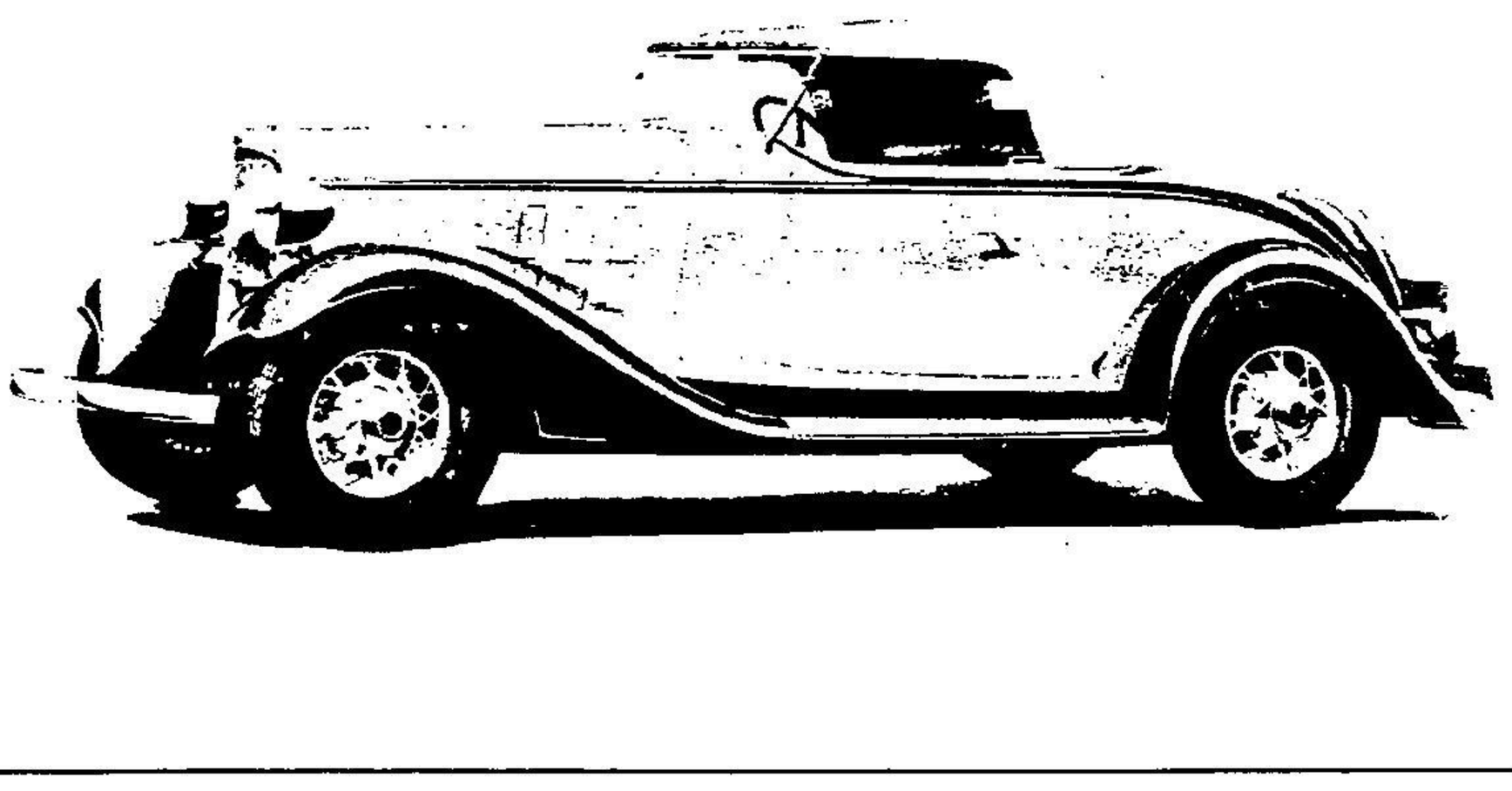

SPECIAL EQUIPMENT

The following new accessories are available for the motorist who wishes to express his individuality in the 1933 Chevrolet. Each accessory conforms to the same high standards of design, material and workmanship which are evidenced in the beautiful new Chevrolet.

RADIO

An excellent Chevrolet radio set of the six-tube super-hetrodyne type is available. The receiver in a compact assembly is easily installed behind the instrument panel to the left of the steering column where it is hidden from sight except for the small control panel which extends slightly beyond the instrument panel for greater accessibility. The radio is locked with the same type of lock used on the ignition and doors. It is equipped with a dynamic speaker which is easily installed at the center of the dash. This speaker has a tone control. A single conduit from the receiver is connected to the speaker and from there to the battery. A screen type aerial is located in the front part of the top. All motor noises are eliminated by the use of suppressors and condensers. The receiver, speaker aerial and all connections are supplied as a unit.

BUMPERS

The bumpers are improved in design and appearance. In the front bumper the distance between the front and rear bars is increased to provide more movement for flexion. The front bar is reshaped for both appearance and flexibility. Its curve at the center is more gradual while those at the ends are more abrupt. The rear bumper is redesigned to conform to the new car design. The rear bar is shaped at the center to clear the new position of the spare tire, affording it greater protection. At the ends, the curves are abrupt. The rear bar is supported at each end by a separate front bar which is bent back upon itself at its attachment to the rear bar. These bars provide greater protection where it is most needed. They support the rear bar by means of medallion covered attachments at their inner ends and by bolts at the outer.

METAL TIRE COVER

This beautifully enameled unit consists of two steel stampings fitting on each side of the spare tire. The inner extends from the center of the tire to cover part of the unexposed tire wall while the outer extends from the tire center to cover the entire exposed side wall of the tire. A wide stainless steel moulding, integral with the outer stamping, covers the joint of the two stampings around the periphery of the tire. Another decorative stainless steel moulding, located at the center of the cover exposed wall, follows the contour of the tire to improve the appearance. Three stainless steel clamps equally spaced on the top of the inner stamping, clamp the two parts together.

METAL TIRE COVER PLATE

This circular disc is used with the metal tire cover to provide maximum protection for the tire and wheel and also to conform to the present trend. It covers the entire exposed portion of the wheel, being invisibly fastened by hooks on its outer edge to the tire cover inner edge. Its inner edge rests on the wheel hub and is covered by the hub cap. It is beautifully enameled in black.

RUBBER TIRE COVER

This cover is designed to give the appearance of a metal tire cover. It is made of thick rubber with sufficient flexibility to insure its easy removal and replacement. It extends around the entire periphery of the spare tire covering the top and the exposed side wall. It is beautifully black enameled with two ornamental white enameled beads on the side wall.

TRUNK RACK

The trunk rack is of sturdy construction. It serves both to carry a trunk and to improve the rear appearance when not in use. It consists of a beautifully enameled one piece platform of stamped steel supported by a bracket

and a brace at each end. This platform is stamped with two rows of four long horizontal slots. Five chrome plated horizontal mouldings extend the entire width of the platform separating each pair of slots. When not in use the platform with the moulding side outward fits against the rear of the body.

FENDER TIRE WELLS

Front fenders with tire wells and the tire attaching equipment are available for those who wish extreme smartness in their cars.

SPRING COVERS

Two of these covers are used with each spring. Each extends from the spring eye to the "U" bolts. They are made of black waterproofed imitation leather similar to that used in the car top, and are carefully shaped to the spring to which they are clipped. The side which contacts the base of the spring is lined with felt which is saturated with lubricant at the point of manufacture. This feature with the covering insures constant protection and lubrication of the spring, providing a stable riding condition.

WINDSHIELD DEFROSTER

This electrical radiant heater adequately maintains clear vision thru the windshield during inclement weather. Its cup shaped reflector body is universally adjustable. Its bracket base is screwed to the windshield header. An arm swiveling in this bracket is connected to the cup body by means of a ball and socket joint. The control switch is conveniently located in the bracket base. With the exception of the reflector the entire unit is chrome plated and is very attractive in appearance.

WIRELESS CIGARETTE LIGHTER

This convenient and attractive lighter is easily installed on the instrument panel. The exposed parts consist of a cadmium plated ring which retains the hollow knob in which the lighter filament is contained. This knob is beautifully designed and is made of an onyx-like material thru which the glow of the filament is visible. A slight pressure of the knob in its base causes the filament to glow, after which the knob may be removed for use as no attaching wires restrict its movement.

LICENSE TAG FRAME

This attractive chrome plated frame fits any license tag improving its appearance. It consists of eight pieces of telescopic tubing, grooved on their inner edges for the insertion of the tag. Rust-proof bracket bolts, nuts and washers are furnished with the frame for attaching the tags to the car.

SUN VISOR

A sun visor identical with that furnished as standard equipment at the driver's side of the car is available for the use of the front seat passenger.

NON-GLARE SHIELD

This shield is a simple device used with the rear view mirror to protect the driver's eyes from the headlamp glare of cars approaching from his rear. It consists of an amber, black, or green colored celluloid cover which is held to the mirror by a spring clamp hidden behind the mirror. The celluloid swivels on the upper end of the clamp to a position above the mirror when not in use.

EAGLE RADIATOR CAP

The special Eagle radiator cap which lends extra smartness to the car is redesigned to conform to the streamlining of the car.

TAIL AND STOP LAMP

A tail and stop lamp for use on right rear fenders is available for those who wish the additional safety furnished by an extra lamp. This is identical with the standard left hand lamp. The lamp bracket conforms in design to that on the left fender, but has no license tag bracket, and is shaped at the base to fit the right fender.

CHEVROLET 1933 COMMERCIAL ENGINEERING FEATURES

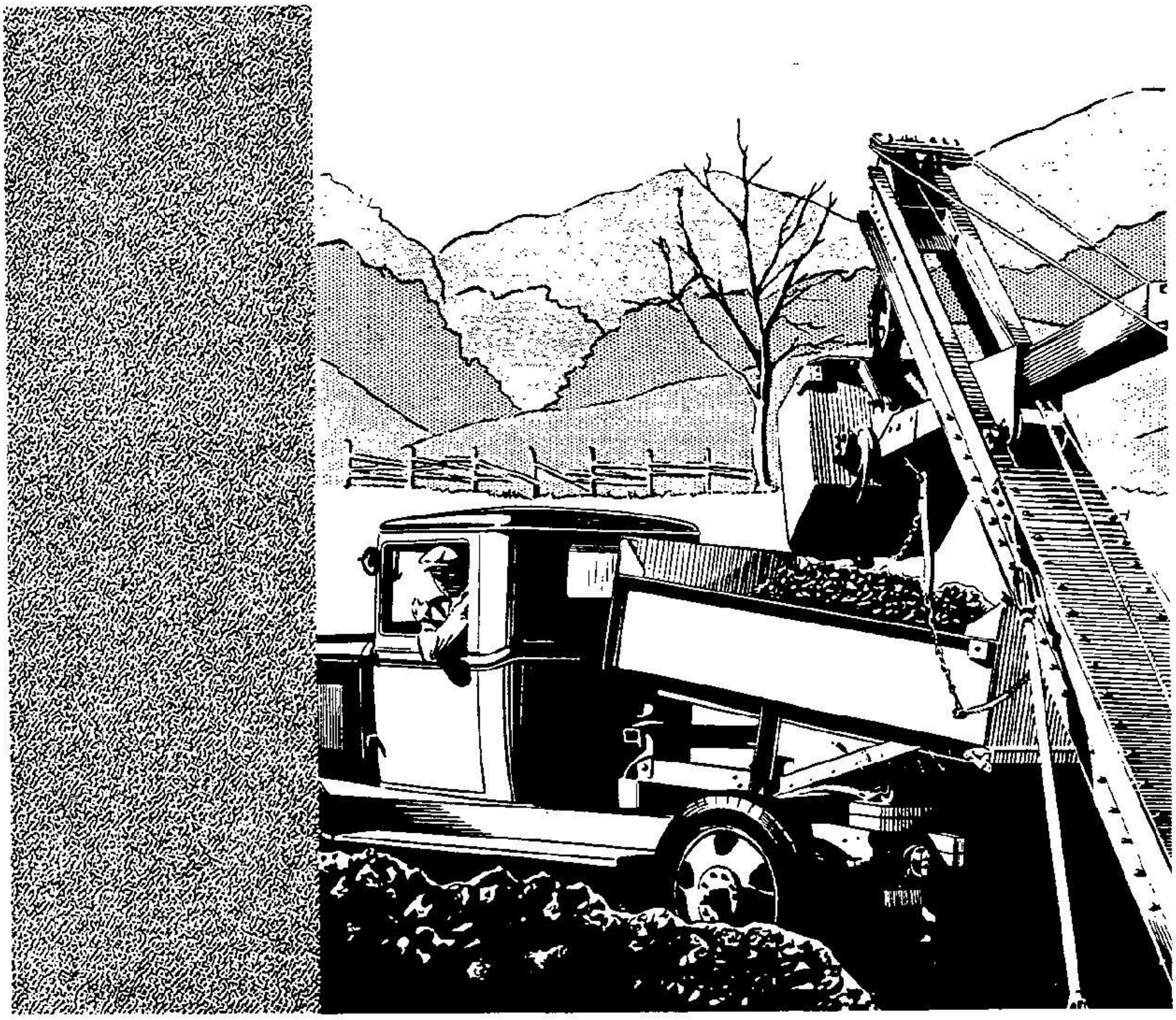

CHEVROLET 1933 COMMERCIAL ENGINEERING FEATURES

INTRODUCTION

The 1933 Light Delivery and Truck units embody so many of the new features of the passenger car line that it is deemed advisable to cover the features of the commercial line as a supplement to the Passenger Car Feature Book. This eliminates the necessity for duplication of information and places in the hands of authorized persons the entire collection of data concerning 1933 features in a single volume.

The 1933 Chevrolet commercial line again includes three distinct types of vehicles: the

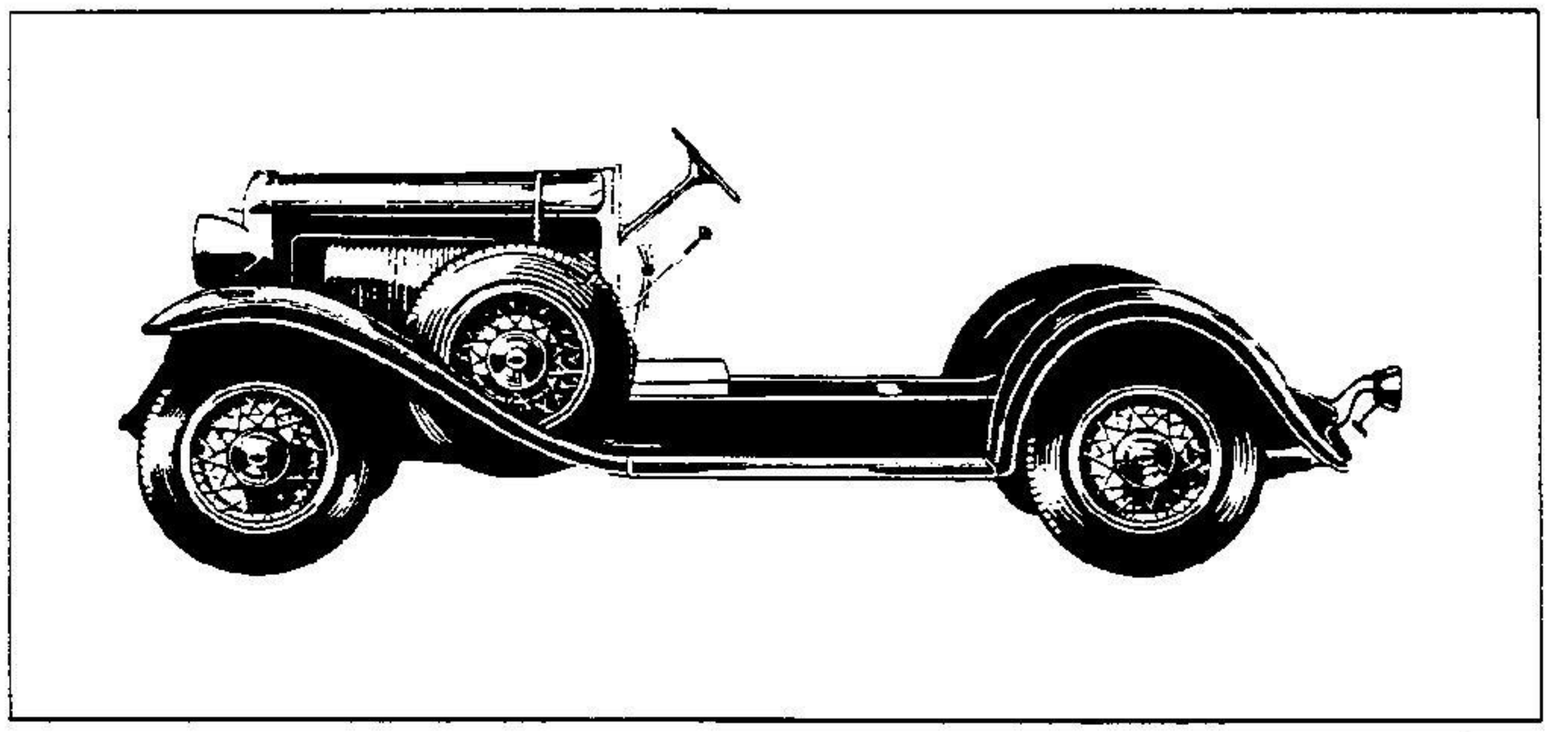

108 9/16 inch wheelbase Light Delivery, the 131 inch wheelbase truck and the 157 inch wheelbase truck. The Light Delivery is rated as a one-half ton vehicle. It is strictly for light duty and is built on a modified 1932 passenger car frame. The axles, clutch, steering mechanism and wheels are passenger car units. The engine, however, is the same as that used in the heavier duty trucks. The transmission is the same as that used in the passenger cars, embodying the syncro-mesh feature, but with free-wheeling omitted. The sheet metal parts and the radiator have the same sturdy appearance as those in the truck line.

The 131 inch wheelbase truck is supplied with either single or dual wheel equipment. It has a frame 6 1/2 inches in depth, a four-speed transmission, a ten inch clutch, heavy duty front and rear axles and a special truck engine. This truck is rated as a one and one half ton vehicle, having an allowable gross weight of 7500 pounds when equipped with single wheels and of 8300 pounds when dual wheels are supplied.

The 157 inch wheelbase truck has an allowable gross weight of 7900 pounds when equipped with single wheels and 8300 pounds with dual wheels. It

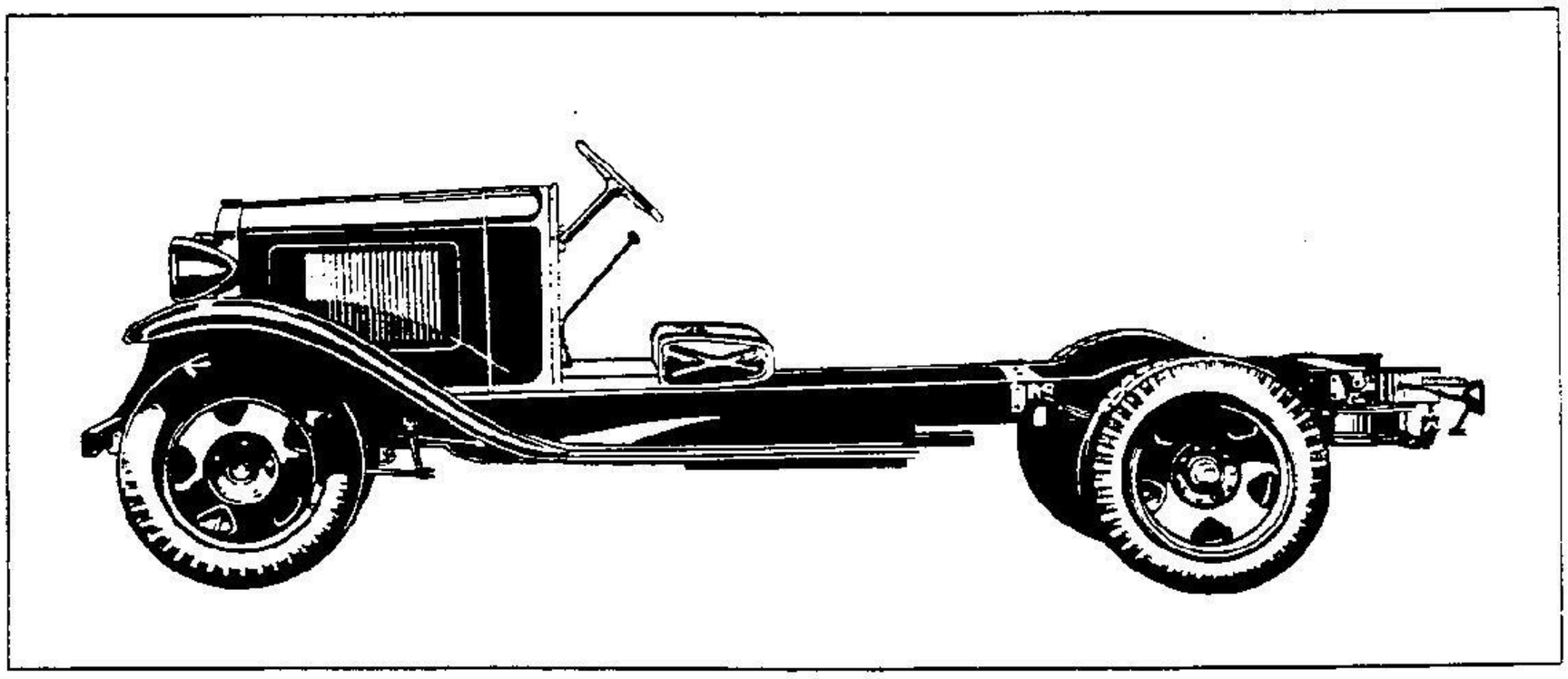

uses the same major units, except for the frame which is longer and of heavier construction. It is supplied with single or dual wheel equipment and is in-

CHEVROLET 1933 COMMERCIAL ENGINEERING FEATURES

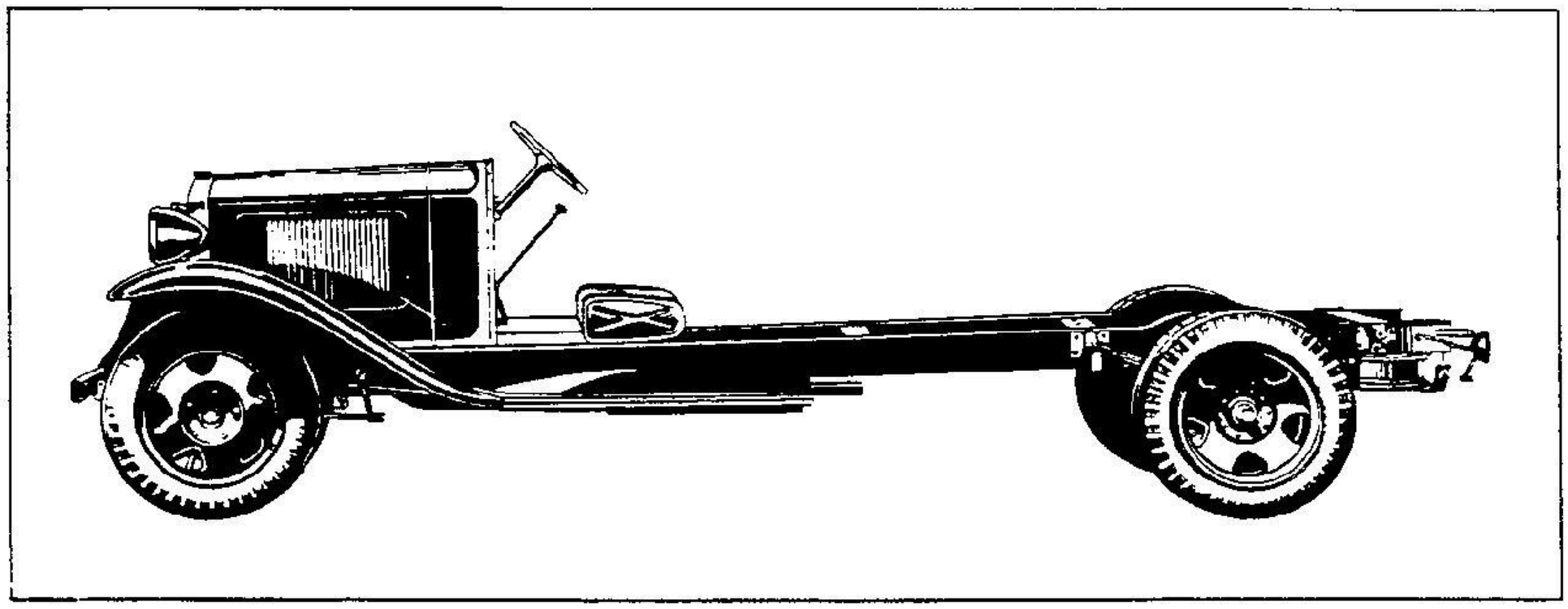

tended to carry bulky loads which require more body space.

The chart on page gives the specifications of major units of Chevrolet trucks year by year from 1926 to 1933. It is intended to show the continuous development of the truck line and the progressive elimination of passenger car units. In the following pages those features of the commercial line which are new and different from those of the passenger car line are discussed in detail.

NEW FEATURES IN THE 1933 LIGHT DELIVERY

* indicates features common to the passenger cars

FRAME

1. Wider front cross member.
2. Wider rear cross member.
3. *Stronger, flanged step hangers.
4. *Battery guard added.

EXHAUST SYSTEM

5. *Larger, resonance-type exhaust silencer.
6. *Integral exhaust pipe packing flange with separate pilot.
7. Heavier gauge exhaust pipe.
8. Larger diameter tail pipe.

SPRINGS

9. *Rounded edges at front spring leaf ends.

FRONT AXLE

10. *Heavier I beam.
11. *Press type inner hub cap.
12. *Angle lubrication fittings.

REAR AXLE

13. *Larger axle housing with integral reinforcements.
14. *Pressed steel axle housing flanges.
15. *Stronger, one-piece differential case.
16. *Increased differential pinion bearing.
17. *Increased gear ratio.
18. *More quiet drive gear and pinion.
19. *More rivets to attach ring gear.
20. *Integral pinion bearing spacer.
21. *Wheel hub forged integral on shaft.
22. *Hyatt wheel bearing.
23. *Wheel bearing closer to center of wheel.
24. *Leather Oil seal

BRAKES AND CONNECTIONS

25. *Larger brakes - front and rear.
26. *Longer and wider linings.

NEW FEATURES IN THE 1933 LIGHT DELIVERY

27. *Ribbed brake drums.
28. *Longer cam bearings.
29. *Heavier brake shoe webs.
30. *Increased bearing at fulcrum points.
31. *Improved shoe alignment.
32. *Spring-loaded shoe guides.
33. *"Cut-in" parking brake linkage.
34. *Increased hand brake operating range.
35. *Larger service brake cross shaft.

ENGINE

36. *Increased piston displacement.
37. Increased power.
38. *Improved performance.
39. *Smoother operation.
40. *Better fuel economy.
41. *Heavier crankshaft balanced to closer limits in one plane.
42. *Larger diameter crank pins.
43. *Larger counterweights.
44. *Heavier, more sensitive harmonic balancer.
45. *Improved flywheel mounting.
46. *Heavier flywheel web.
47. *Improved connecting rods.
48. *Wider oil control piston rings.
49. *Better oil control on cylinder walls.
50. *Stronger cylinder head.
51. *Smaller spark plugs with gap in more efficient position.
52. *Hollow copper spark plug gaskets.
53. *Heavier valve springs.
54. *Reduced side thrust on valve stems.
55. *Better control of overhead lubrication.
56. *Spark advance controlled by suction.
57. *Graduated manual "Octane Selector".
58. *Steel-backed, babbitt center camshaft bearing.
59. *Ribbed oil pan flanges.
60. *Thicker oil pan gaskets and seals.
61. *More secure clamp on oil filler tube.
62. *More accessible oil level gauge.
63. *Reserve oil for front water pump bushing.
64. *Quiet, staggered four-bladed fan.
65. *Improved carburetor.
66. *Improved intake and exhaust manifolds.
67. *Thermostatic heat control.
68. "Diamond" rubber mountings.

CLUTCH

69. *Increased torque capacity.
70. *Smoother operation.
71. *Braided-moulded friction rings.
72. *Stamped clutch fork.
73. *Heavier clutch fork ball retainer and spring.

TRANSMISSION

74. *Helical constant-mesh gears.
75. *Improved reduction ratios.

FUEL SYSTEM

76. Larger, baffled fuel tank mounted at rear.
77. Side filler with vent pipe.
78. Spring and cam filler cap.
79. T-bolt strap mounting.

STEERING GEAR

80. *Increased gear ratio.
81. *Stamped mast jacket clamp.
82. Stronger steering gear frame bracket.

SHEET METAL

83. Stabilized front fender mounting.
84. Deeper crown front and rear fenders.
85. Improved radiator splash guard.
86. Improved running boards and aprons.
87. Reinforced hood.
88. Rubber cushions added between hood and cowl.
89. Internal hood catch with single handle in center.
90. Single, arched "U" section tie bar.

ELECTRICAL EQUIPMENT AND INSTRUMENTS

91. Longer parabolic headlamps with convex lenses.
92. *Improved instrument arrangement.
93. *Airplane type instruments.
94. *Two instrument panel bulbs.
95. *Improved convex lenses on all instruments.

NEW FEATURES IN THE 1933 LIGHT DELIVERY

96. *Definite alignment of all control buttons.
97. *Ignition lock connected to coil.
98. *Separate fuse in stop lamp circuit.

RADIATOR

99. Stabilized radiator mounting.
100. Improved radiator shell design.
101. Built-in grille.
102. Reinforced shell braced to headlamp tie bar.
103. All copper core.

WHEEL CARRIER

104. Braced fender well carrier standard.

CAB

105. Stamped steel riser.
106. Pressed steel seat strainer.
107. Stronger dash panel legs.
108. Stronger instrument panel.
109. Steel door trim panels.
110. Shatter-proof glass windshield.
111. Stronger windshield frame.
112. Improved windshield hinge.
113. One-piece leak-proof windshield weatherstrip.

BODIES

PANEL BODY

114. "French" type top.
115. Embossed moulding in upper side panels.
116. Paint finish of polished appearance.
117. Steel door trim panels.
118. Shatter-proof glass windshield.
119. Windshield doubly weatherstripped.
120. Form-fitting, adjustable driver's seat.
121. "Covered" door hinges including check.
122. Improved rear door lock.
123. Stronger rear cross sill.
124. Improved bracing at rear doors.
125. Improved weatherstripping of rear doors.
126. Larger rubber bumpers for rear doors.
127. Metal trim panels on rear doors.
128. Improved side lining panels.
129. Larger side lock pillar braces.
130. Sponge-rubber filler seal between side panels and roof.
131. Cord-welt between rear fenders and body.

SINGLE UNIT EXPRESS BODY

132. Shatter-proof glass windshield.
133. Windshield doubly weatherstripped.
134. Steel door trim panels.
135. "Rebound snubber" type cushion springs.
136. Improved side lining panels.

NEW FEATURES IN THE 1933 TRUCK MODELS

* indicates features common to the passenger cars

FRAME

1. Increased allowable gross weight.
2. Heavier side rails without reinforcement (131 only).
3. Wider front cross member.
4. Deeper engine rear support (131 only).
5. Deeper second cross member (131 only).
6. Larger rivets in engine rear support and second and third cross members (131 only)
7. Flat cone heads formed on all frame rivets.
8. Stronger, flanged step hangers respaced.

EXHAUST SYSTEM

9. *Larger, resonance-type exhaust silencer.
10. *Integral exhaust pipe packing flange.
11. Heavier gauge exhaust pipe.
12. Larger diameter tail pipe.

SPRINGS

13. Rounded edges at front spring leaf ends (131 only).
14. Larger diameter rear spring pins.
15. Longer rear spring shackles.

NEW FEATURES IN THE 1933 TRUCK MODELS

FRONT AXLE

16. Heavier I beam.
17. Angle lubrication fittings.

REAR AXLE

18. Stronger axle housing with integral reinforcements.
19. Shorter, stronger differential carrier.
20. Straddle-mounted drive pinion.
21. Bolted torque tube flange.
22. Larger diameter torque tube.
23. Larger diameter propeller shaft.
24. Optional gear ratio for construction work (131 only).
25. Increased drive gear and pinion face width.
26. More ring gear rivets of larger diameter.
27. Adjustable ring gear thrust pad.
28. Larger front bearing.
29. Four-pinion differential.
30. Stronger differential case and cover.

BRAKES AND CONNECTIONS

31. *Larger front brakes.
32. *Longer and wider front linings.
33. *Longer front brake cam bearings.
34. *Heavier front brake shoe webs.
35. *Increased bearing at front brake fulcrum points.
36. *Improved front brake shoe alignment.
37. *Spring-loaded front brake shoe guides.
38. Ribbed front brake drums.

ENGINE

39. *Increased piston displacement.
40. Increased power.
41. *Improved performance.
42. *Smoother operation.
43. *Better fuel economy.
44. *Heavier crankshaft balanced to closer limits in one plane.
45. *Larger diameter crank pins.
46. *Larger counterweights.
47. *Heavier, more sensitive harmonic balancer.
48. *Improved flywheel mounting.
49. *Heavier flywheel web.
50. *Improved connecting rods.
51. *Wider oil control piston rings.
52. *Better oil control on piston walls.
53. *Stronger cylinder head
54. *Smaller spark plugs with gap in more efficient position.
55. *Hollow copper spark plug gaskets.
56. *Heavier valve springs.
57. *Reduced side thrust on valve stems.
58. *Better control of overhead lubrication.
59. *Spark advance controlled by suction.
60. *Graduated manual "Octane Selector".
61. *Steel-backed, babbitt center camshaft bearing.
62. *Ribbed oil pan flanges.
63. *Thicker oil pan gaskets and seals.
64. *More secure clamp on oil filler tube.
65. *More accessible oil level gauge.
66. *Reserve oil for front water pump bushing.
67. *Quiet, staggered four-bladed fan.
68. *Improved carburetor.
69. *Improved intake and exhaust manifolds.
70. *Thermostatic heat control.
71. Rubber mounting at front.

CLUTCH

72. Increased torque capacity.
73. Increased spring pressure.
74. More rivets to secure friction rings.
75. *Stamped clutch fork.
76. *Heavier clutch fork ball retainer and spring.

TRANSMISSION

77. Larger first and second speed gear rivets.
78. Prevention of intermeshing.

UNIVERSAL JOINT

79. Four arm forged spider type.

FUEL SYSTEM

80. Larger fuel tank.

NEW FEATURES IN THE 1933 TRUCK MODELS

STEERING GEAR

81. *Increased gear ratio.
82. *Stamped mast jacket clamp.
83. Stronger steering gear frame bracket.

WHEELS AND TIRES

84. 6.00-20, 6 ply tires added as optional at no additional cost.
85. 32 x 6, 8 ply tires added as optional at additional cost.
86. 6.50-20, 6 ply tires added as optional at additional cost.
87. 7.00-20, 8 ply tires added as optional at additional cost.
88. Spacer added for dual balloon tires.

SHEET METAL

89. Stabilized front fender mounting.
90. Deeper crown front fenders.
91. Improved radiator splash guard.
92. Improved running boards and aprons.
93. Reinforced hood.
94. Rubber cushions added between hood and cowl.
95. Internal hood catch with single handle.
96. Single, arched "U" section tie bar.

ELECTRICAL EQUIPMENT AND INSTRUMENTS

97. Longer parabolic headlamps with convex lenses.
98. *Improved instrument arrangement.
99. *Airplane type instruments.
100. *Two instrument panel bulbs.
101. *Improved convex lenses on all instruments.
102. *Definite alignment of all control buttons.
103. *Ignition lock connected to coil.

RADIATOR

104. Stabilized radiator mounting.
105. Improved radiator shell design.
106. Built-in grille.
107. Reinforced shell braced to headlamp tie bar.

CAB (Both Trucks)

108. Stamped steel riser.
109. Pressed steel seat strainer.
110. Stronger dash panel legs.
111. Stronger instrument panel.
112. Steel door trim panels.
113. Shatter-proof glass windshield.
114. Stronger windshield frame.
115. Improved windshield hinge.
116. One-piece leak-proof windshield weatherstrip.

BODIES

Long Wheelbase Trucks

117. Farm body added.
118. Farm tip top body added.
119. Farm rack body added.
120. School bus body added.
121. Improved gate on stock rack body.

Short Wheelbase Trucks

PANEL BODY

122. "French" type top.
123. Embossed moulding in upper side panels.
124. Paint finish of polished appearance.
125. Steel door trim panels.
126. Shatter-proof glass windshield.
127. Windshield doubly weatherstripped.
128. Form-fitting, adjustable driver's seat.
129. "Covered" door hinges including check.
130. Improved rear door lock.
131. Stronger rear cross sill.
132. Improved bracing at rear doors.
133. Improved weatherstripping of rear doors.
134. Larger rubber bumpers for rear doors.
135. Metal trim panels on rear doors.
136. Improved side lining panels.
137. Larger side lock pillar braces.
138. Sponge-rubber filler seal between side panels and roof.
139. Cord-welt between rear fenders and body.

SINGLE UNIT EXPRESS BODY

140. Shatter-proof glass windshield.
141. Windshield doubly weatherstripped.
142. Steel door trim panels.
143. "Rebound snubber" type cushion springs.
144. Improved side lining panels.

TRUCK UNIT SPECIFICATIONS

YEAR	1933		1932		1931		1930	1929	1928	1927	1926
WHEELBASE	157	131	157	131	157	131	131	131	124	124	124
RATED CAPACITY	1½ TON	1½ TON	1½ TON	1½ TON	1½ TON	1½ TON	1½ TON	1½ TON	1 TON	1 TON	1 TON
GROSS ALLOWABLE WEIGHT STD. SINGLE WHEELS	7900	7500	7800	7400	7800	7300	7000	7000	6000	6000	6000
GROSS ALLOWABLE WEIGHT STD. DUAL WHEELS	8300	8300	8200	8200	8000	8000	8000	.....	.....	.....	.....
SIDE RAIL DEPTH	7	6⅞	7	6	7	5	6	6	6	6	6
SIDE RAIL FLANGE WIDTH	2⅛	2⅛	2⅛	2¼	2⅛	2¼	2¼	2¼	1¾	1⅞	1¾
SIDE RAIL FLANGE THICKNESS	5/32	5/32	5/32	5/32	5/32	5/32	5/32	5/32	5/32	5/32	5/32
FRAME REINFORCEMENT	NONE	NONE	NONE	5 11/16 x 2 x 1/8	NONE	5 11/16 x 2 x 1/8	NONE	NONE	NONE	NONE	NONE
FRONT SPRING LOAD CAPACITY	750	550	750	550	750	550	550	550	550	550	550
REAR SPRING LOAD CAPACITY	3000	3000	3000	3000	3000	2000	2000	2000	2000	2000	1750
REAR SPRING PIN DIAMETER	.875	.875	.617	.617	.617	.517	.617	.617	.617	.617	.617
I BEAM DEPTH	2 3/32	2 9/32	2¼	2¼	2¼	2¼	2	2	2	PASS. 2	PASS. 1⅞
I BEAM WIDTH	2	2	2	2	2	2	1⅝	1¾	1⅝	PASS. 1¼	PASS. 1⅝
I BEAM WEB	11/32	11/32	5/16	5/16	5/16	5/16	1/2	1/2	7/16	PASS. 1/2	PASS. 5/16
REAR AXLE RATIO	5.43	5.43	5.43	5.43	5.43	5.43	5.43	4.875	5.43	5.43	5.43
DRIVE PINION MOUNTING	STRADDLE	STRADDLE	OVERHUNG	OVERHUNG	OVERHUNG	OVERHUNG	OVERHUNG	OVERHUNG	OVERHUNG	OVERHUNG	OVERHUNG
NO. OF DIFF. PINIONS	4	4	2	2	2	2	2	2	2	2	2
FRONT BRAKE DIAMETER	12	12	11½	11½	11½	11½	11½	10½	NONE	NONE	NONE
REAR BRAKE TYPE	INTERNAL	INTERNAL	INTERNAL	INTERNAL	INTERNAL	INTERNAL	EXTERNAL	EXTERNAL	EXTERNAL	EXTERNAL	EXTERNAL
REAR BRAKE DIAMETER	16	16	16	16	16	16	12½	12½	12⅜	12⅜	12⅜
ENGINE	SPECIAL TRUCK ENGINE		SPECIAL TRUCK ENGINE		SAME AS PASSENGER EXCEPT 4 BLADED FAN				PASS.	PASS.	PASS.
MAXIMUM BRAKE HORSEPOWER	56	56	53	53	50	50	50	46	35	27	26
CLUTCH DIAMETER	10	10	10	10	10	10	10	PASS. 9	PASS. 9	PASS. 9	PASS. 9
TRANSMISSION TYPE	4 SPEED	4 SPEED	4 SPEED	4 SPEED	4 SPEED	4 SPEED	4 SPEED	4 SPEED	PASS. 3 SPEED	PASS. 3 SPEED	PASS. 3 SPEED.
FIRST SPEED RATIO	7.22	7.22	7.22	7.22	6.16	6.16	6.16	6.16	PASS. 3.32	PASS. 3.32	PASS. 3.32
SECOND SPEED RATIO	3.47	3.47	3.47	3.47	3.47	3.47	3.47	3.47	PASS. 1.77	PASS. 1.77	PASS. 1.77
THIRD SPEED RATIO	1.71	1.71	1.71	1.71	1.74	1.74	1.74	1.74	PASS. 1.	PASS. 1.	PASS. 1.
FOURTH SPEED RATIO	1.	1.	1.	1.	1.	1.	1.	1.	NONE	NONE	NONE
REVERSE SPEED RATIO	7.15	7.15	7.15	7.15	6.297	6.297	6.297	6.297	PASS. 4.20	PASS. 4.20	PASS. 4.20
TOTAL LOW SPEED RATIO	39.2	39.2	39.2	39.2	33.5	33.5	33.5	30.0	PASS. 16.	PASS. 16	PASS. 16.
UNIVERSAL JOINT TYPE	FORGED SPIDER	FORGED SPIDER	STAMPED RING	STAMPED RING	STAMPED RING	STAMPED RING	STAMPED RING	STAMPED RING	STAMPED RING	STAMPED RING	STAMPED RING
STEERING GEAR RATIO	14:1	14:1	12:1	12:1	12:1	12:1	9.5:1	9.5:1	9.5:1	7:1	7:1
MINIMUM PITMAN ARM SECTION	¾ x 9/16	¾ x 9/16	¾ x 3/16	¾ x 9/16	¾ x 2/16	¾ x 2/16	¾ x 2/16	¾ x 9/16	PASS. 9/16 x 3/16	PASS. 3/16 x 3/16	PASS. 3/16 x 3/16
RADIATOR CORE	36 SECTIONS 5/16 HEXAGON COPPER							32 SEC. 5/16 BRASS	5/16 BRASS	5/16 BRASS	5/16 BRASS
FRONT WHEEL TYPE	20 x 5 DISC	20 x 5 DISC	20 x 5 DISC	20 x 5 DISC	20 x 5 DISC	20 x 5 DISC	20 x 5 DISC	20 x 5 DISC	30 x 5 ARTIL.	29 x 4.40 ARTIL.	PASS. 30 x 3½ ARTIL.
FRONT TIRE SIZE	30 x 5 6 PLY	30 x 5 6 PLY	30 x 5 6 PLY	30 x 5 6 PLY	30 x 5 6 PLY	30 x 5 6 PLY	30 x 5 6 PLY	30 x 5 6 PLY	30 x 5 6 PLY	PASS. 29 x 4.40	PASS. 30 x 3½
REAR WHEEL TYPE - SINGLE	20 x 6 DISC	20 x 5 DISC	20 x 6 DISC	20 x 5 DISC	NONE	20 x 5 DISC	20 x 5 DISC	20 x 5 DISC	30 x 5 ARTIL.	30 x 5 ARTIL.	30 x 5 ARTIL.
REAR TIRE SIZE - SINGLE	32 x 6 10 PLY	32 x 6 8 PLY	32 x 6 10 PLY	32 x 6 8 PLY	NONE	32 x 6 8 PLY	30 x 5 6 PLY	30 x 5 6 PLY	30 x 5 6 PLY	30 x 5 6 PLY	30 x 5 6 PLY
REAR WHEEL TYPE - DUAL	20 x 5 DISC	20 x 5 DISC	20 x 5 DISC	20 x 5 DISC	20 x 5 DISC	20 x 5 DISC	.....	.....	.....	.....	.....
REAR TIRE SIZE - DUAL	30 x 5 6 PLY	30 x 5 6 PLY	30 x 5 6 PLY	30 x 5 6 PLY	30 x 5 6 PLY	30 x 5 6 PLY	.....	.....	.....	.....	.....
BODY EQUIPMENT	CAB AND 10 BODIES	CAB AND 13 BODIES	CAB AND 6 BODIES	CAB AND 13 BODIES	CAB AND 5 BODIES	CAB AND 11 BODIES	CAB	CAB	CAB	CAB	CAB AND 3 BODIES

FRAME

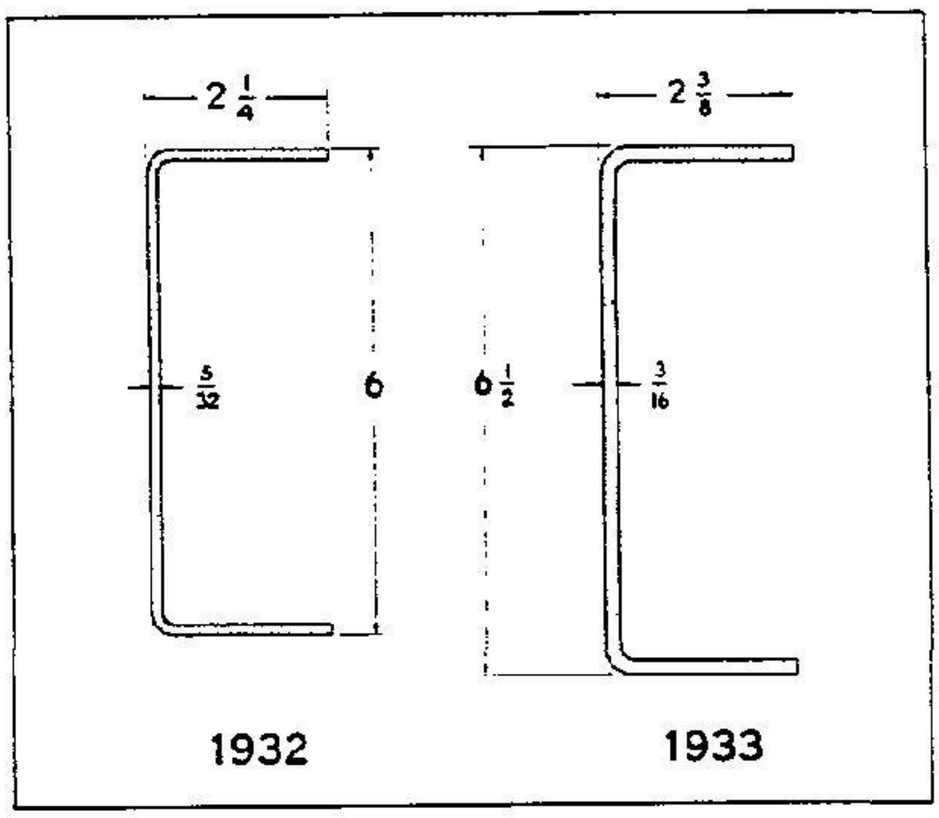

On the short wheelbase truck the engine rear support and the second cross member are deeper at their points of attachment to the side rails, and both members are secured by larger diameter rivets. The rivets which attach the third cross member are also larger in diameter. The 1933 Light Delivery frame is substantially the same as that used in the 1932 passenger line with the same front cross

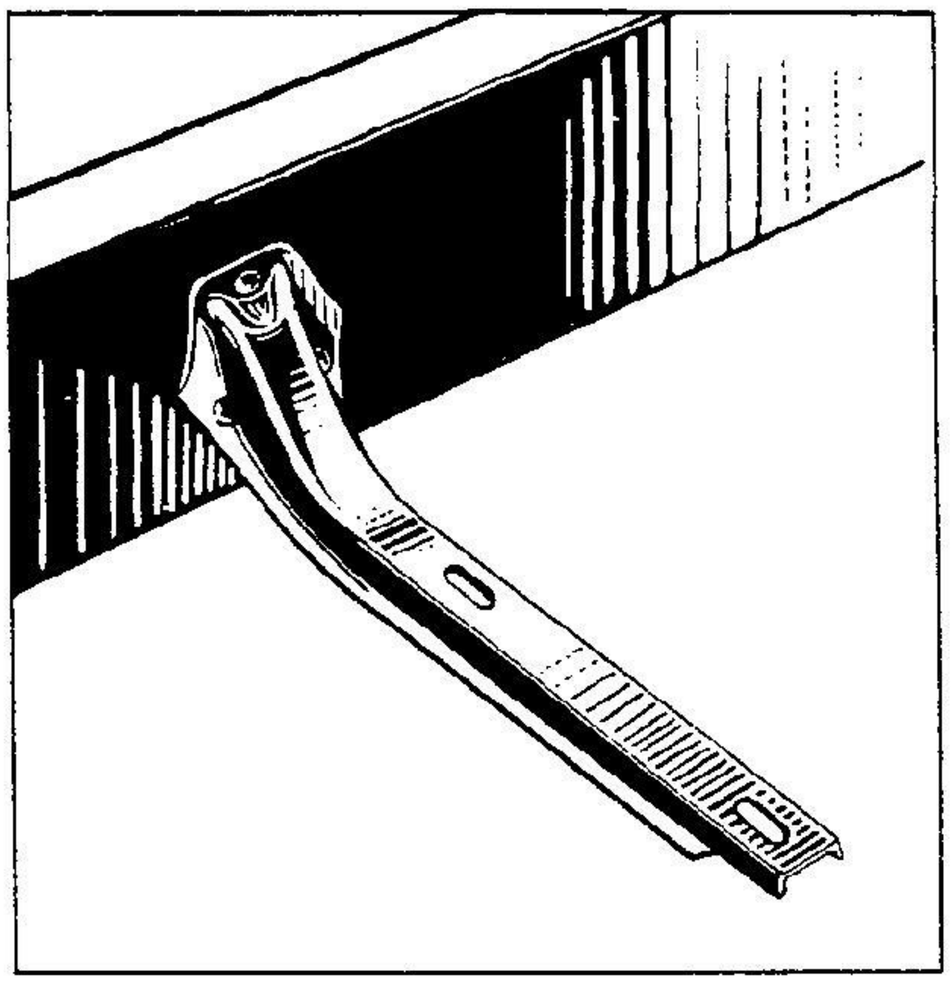

In the short wheelbase truck the section of the frame side rails is increased. The stock is thicker, the channel is deeper and its flanges wider. This increase in strength permits the elimination of the reinforcement. On both the long and short wheelbase trucks the 1932 passenger car front cross member is used. This wider, double-channel section member provides for the rubber front engine mounting and the rubber-insulated fender and radiator mounting. On both trucks all cross member rivets are formed with flat cone heads.

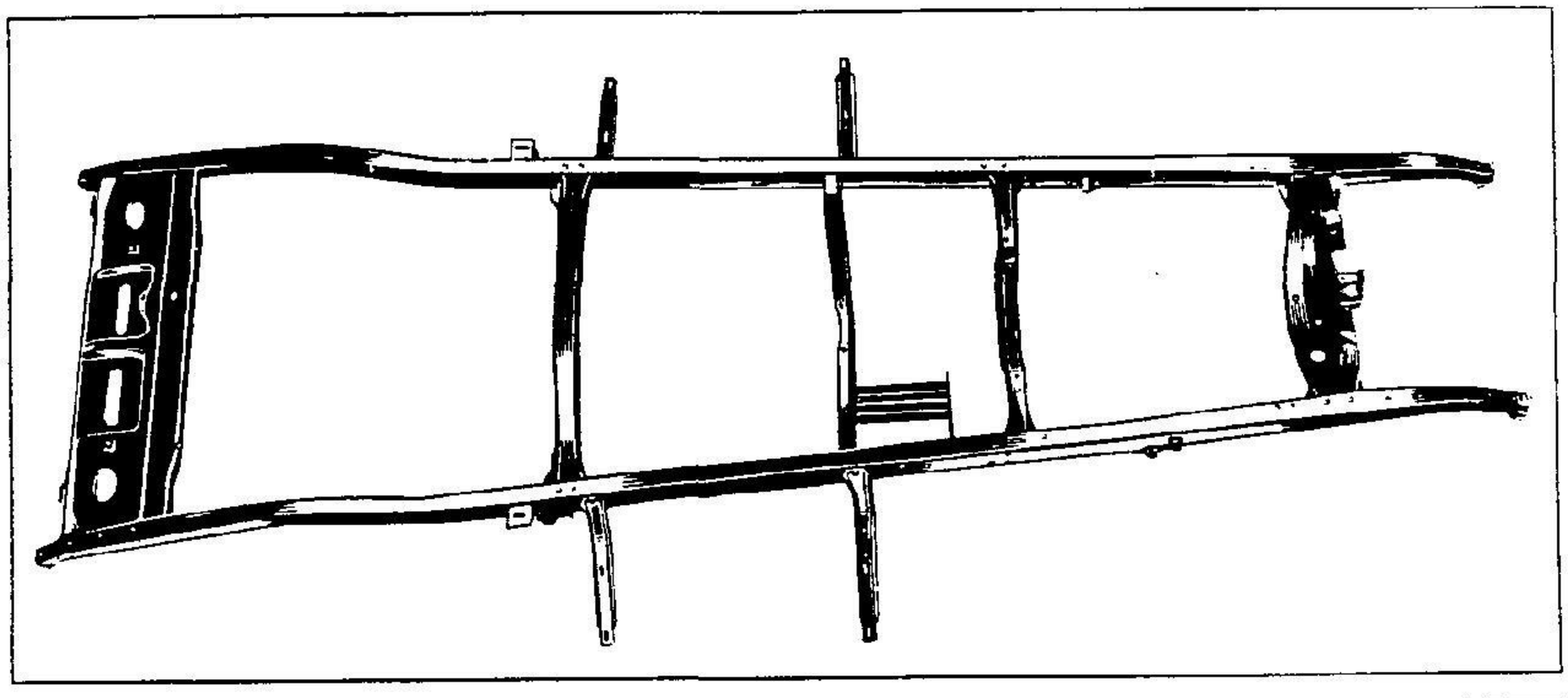

member as is used on both trucks. The rear cross member, however, is considerably wider to provide for the larger gasoline tank. A guard is added at the front of the battery hanger as in the passenger line to protect the battery from flying stones. The step hangers on both trucks, as well as on the Light Delivery, are much more rigid because of the increased depth of the channel and the addition of stiffening flanges extending the full length of the hangers and blending into the attaching pad. This improvement in design eliminates local weakness and reduces deflection.

COMPARATIVE SPECIFICATIONS

SHORT WHEELBASE TRUCK	1932	1933
Side rail depth	6	6 1/2
Side rail thickness	5/32	3/16
Side rail flange width	2 1/4	2 3/8
Engine rear support depth at ends	5 21/32	6 1/8
Second cross member depth at ends	4	4 1/2
Rivet diameter- intermediate cross members	5/16	3/8
LIGHT DELIVERY		
Rear cross member width	11	15 3/4
Front cross member width at ends	6 9/16	10 5/8
Battery guard	None	Corrugated steel
Step hanger section	Channel	Flanged channel

EXHAUST SYSTEM

On the Light Delivery and the long and short wheelbase trucks the new resonance-type exhaust silencer is adopted. This unit is the same as that used on the passenger models. Although these models use larger diameter tail pipes, their lengths and mountings are similar to those used in the commercial line in the past.

COMPARATIVE SPECIFICATIONS

	1932	1933
Exhaust silencer type	Baffle	Resonance
Exhaust silencer length	20 1/2	30
Exhaust pipe flange	Separate	Integral
Exhaust pipe gauge	.0375	.0438
Tail pipe outside diameter	1 1/2	1 3/4

SPRINGS

The front springs on the short wheelbase truck and the Light Delivery are improved by the addition of a rounded edge at the ends of each leaf.This feature is fully described and illustrated in the passenger car section. On both trucks the diameter of the rear spring pins is increased to 7/8 with a corresponding increase in the diameter of the spring eyes, bushings and mounting brackets. The increased bearing area reduces wear and increases the life of both the pins and bushings. The rear spring shackles on the trucks are increased in length to provide ample space for the larger pins.

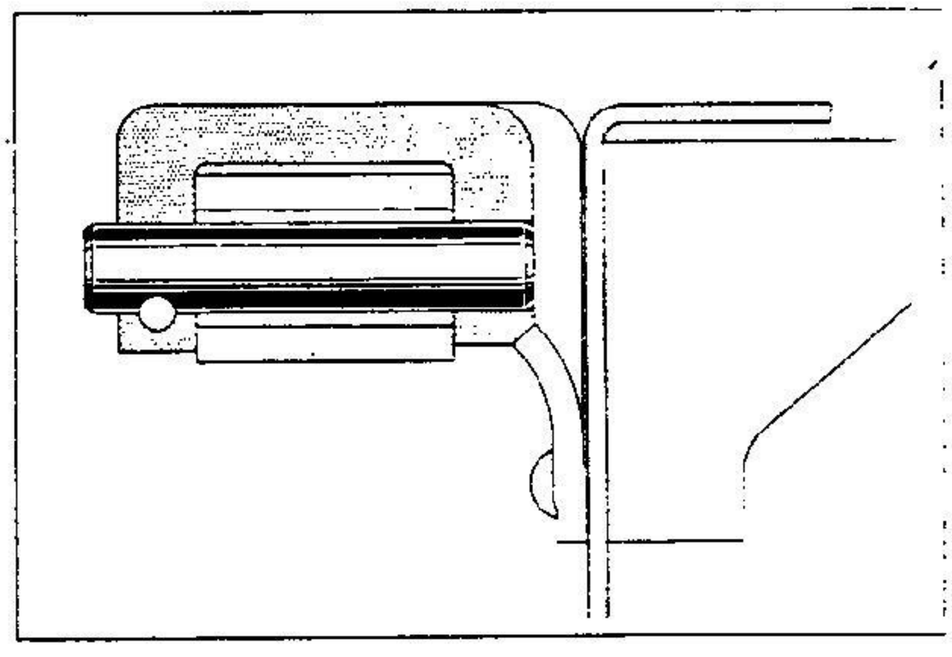

CHEVROLET 1933 COMMERCIAL ENGINEERING FEATURES

COMPARATIVE SPECIFICATIONS

Short Wheelbase Truck and Light Delivery	1932	1933
Front spring ends	Sharp	Rounded
Truck rear spring pin diameter	.617	.875
Truck rear spring shackle center length	2 1/2	2 5/8

FRONT AXLE

The Light Delivery front axle is identical with the one used on the passenger cars and incorporates all of its features.

The I beam on both trucks was strengthened during the 1932 season by an increase in the nominal depth and web thickness at the middle. The thickness of the spring pads was also increased. The shape at the outer ends was changed to provide more gradual blending and to avoid local weakness. Lubrication of the truck steering knuckle bushings is now facilitated by the use of angle lubrication fittings which make the lubrication points more accessible.

COMPARATIVE SPECIFICATIONS

	1932	1933
Truck I beam web thickness	5/16	11/32
Truck I beam depth at center	2 7/32	2 9/32
Truck spring pad thickness	1/4	5/16
Light Delivery I beam web thickness	3/16	1/4
Light Delivery I beam depth at center	1 7/8	1 15/16
Light Delivery I beam width	1 3/4	1 25/32
Light Delivery spindle washer material	Soft steel	Steel,cyanide hardened
Light Delivery inner hub cap	Threaded	Press type
Lubrication fittings	Straight	Angle

REAR AXLE

All of the new features of the 1933 passenger car rear axle are also incorporated in the Light Delivery, the only differences being the lengths of the propeller shaft and torque tube, which remain the same as for 1932 on the Light Delivery.

The rear axle for both long and short wheelbase trucks is redesigned to provide greater strength and durability. The axle housing is larger in diameter at the central banjo portion to house the larger differential unit. The opening is larger and the flange is wider with its reinforcement formed integral with the housing by folding back the 1/4 inch thick housing metal around the entire periphery of the opening. At the outer end, near the spring seats, the axle housing is swaged to increase the metal thickness locally to 9/32. This provides increased strength at the points which are highly stressed.

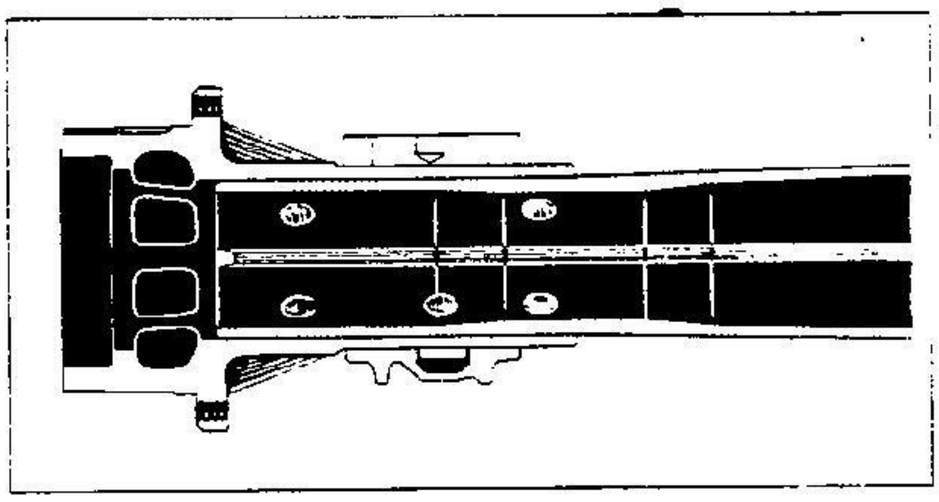

The differential carrier is redesigned to provide for the new straddle-mounted drive pinion and the flanged torque tube. The carrier is larger in diameter and shorter with sturdy ribs located radially about the outside of the conical walls. The front pinion bearing is located about four inches closer to the carrier flange and the rear bearing is located back of the pinion to provide straddle mounting with the pinion supported between the two bearings. The rear bearing is mounted inside the carrier in a heavy integral boss which is supported from the right side by a continuous vertical wall which is reinforced

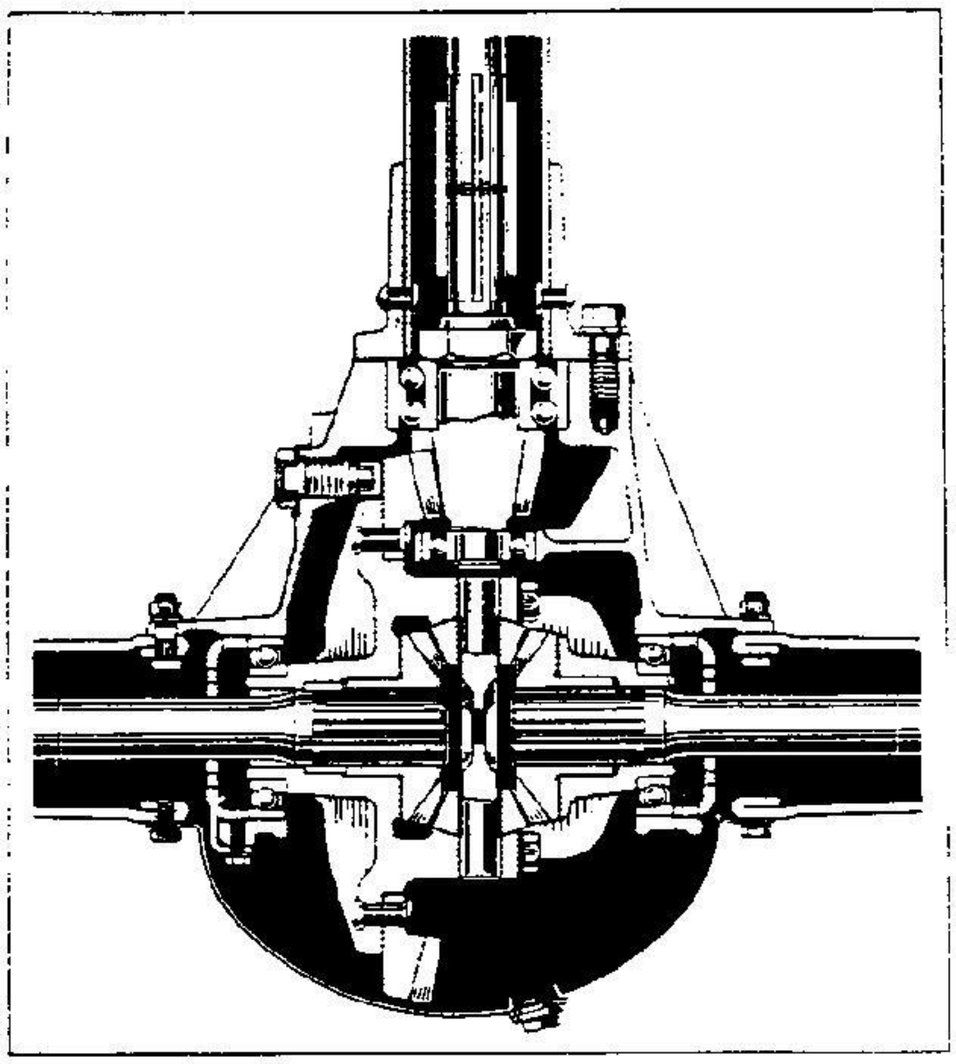

by vertical fore and aft ribs.The two pinion bearings are much closer together, insuring more perfect alignment and a more rigid mounting for the pinion. Because of the new straddle mounting the pinion loads are redistributed, necessitating different proportioning of the pinion bearings. The front bearing is larger with a greater number of balls of larger diameter while the rear bearing is smaller due to its lighter loading. In the new straddle mounting design the bearings seat directly

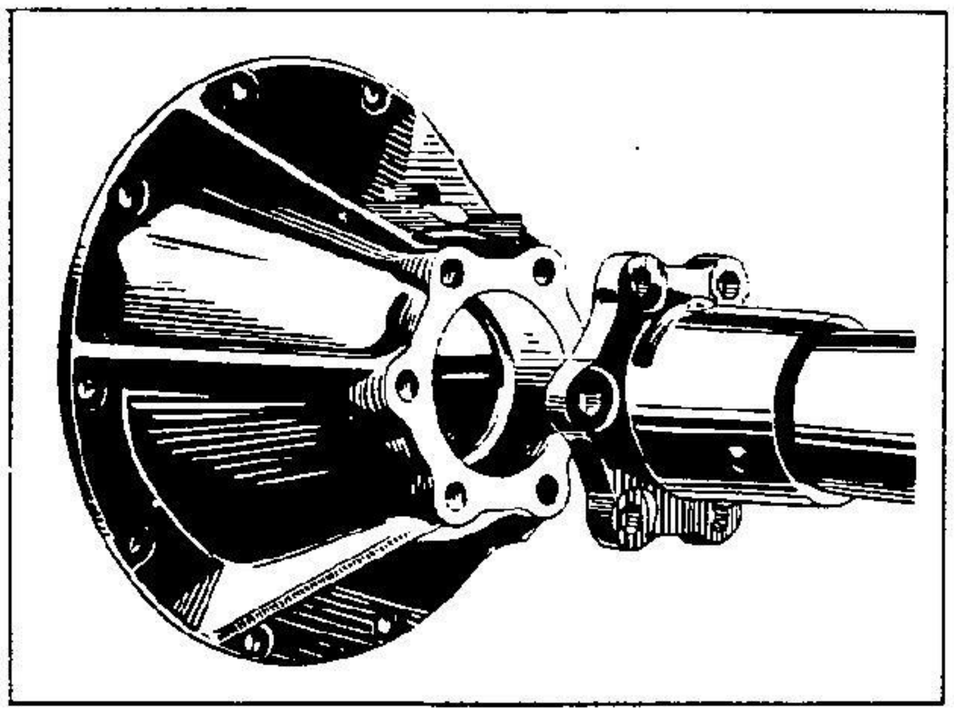

against accurately machined shoulders on the pinion eliminating the spacer and lock sleeve which were required in the overhung design. The thread and splines on the drive pinion are larger and stronger. The teeth are also stronger, with a greater length of face. The ring gear is larger in diameter and has stronger teeth with greater face widths. Its web thickness is also increased. The ring gear is secured to the differential unit by a greater number of larger rivets with spherical heads to insure proper seating. The fixed ring gear thrust pad of crescent shape is replaced by a round thrust button mounted on a screw instead of a pin to permit adjustment. The thrust pad is of high grade alloy bronze and the pilot on the screw is grooved

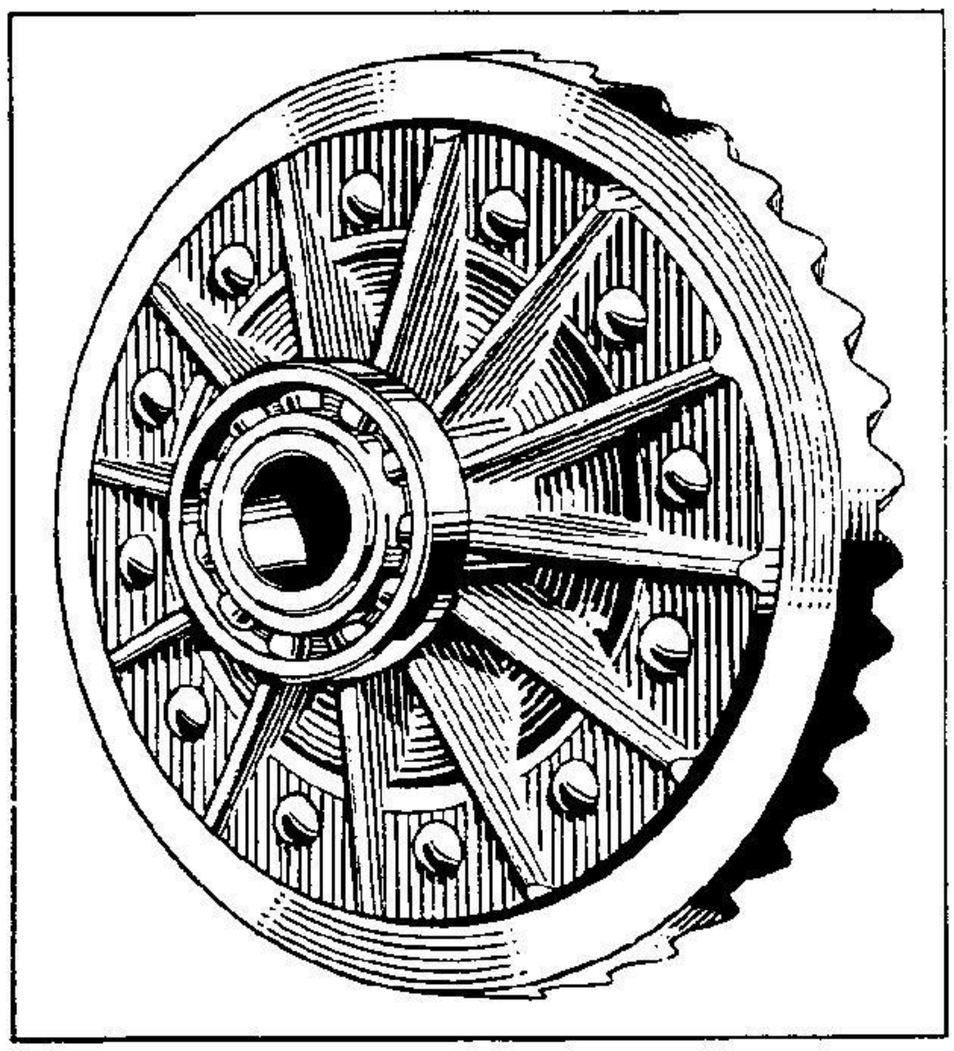

to provide proper lubrication.

The new, four-pinion differential is housed in a heavier, more rigid case. It has a larger flange for the attachment of the ring gear, and it is reinforced by a greater number of thicker ribs. The cover is also strengthened by more ribs and is secured to the case by eight bolts.

The four differential pinions of high grade alloy steel are somewhat smaller than those in the two-pinion unit. Their strength, how-

ever, is greater because their number is doubled. They are mounted on a four-armed spider forged of alloy steel and ground to close limits.Each of the arms has two coined flats to insure proper distribution of the lubricant. The entire differential unit is stronger and more compact. The left hand differential bearing is moved farther outward to provide greater leverage between it and the ring gear to resist the cocking tendency of the gear. The right hand bearing remains in its former position to provide a rigid mounting for the differential unit. The differential bearing caps are stronger and wider.Bolts of larger diameter, spaced slightly farther apart,secure them to the carrier. The torque tube is larger in diameter at the rear end and is pressed and riveted in a sturdy malleable iron flange which bolts to the forward face of the differential carrier. The propeller shaft is larger in diameter with thicker splines to prevent undue deflections and to transmit the increased torque of the engine.

An optional axle ratio is provided on short wheelbase trucks only, for use in construction work. This optional equipment provides a greater reduction ratio and is assembled only on short wheelbase trucks which leave the assembly plants without bodies.

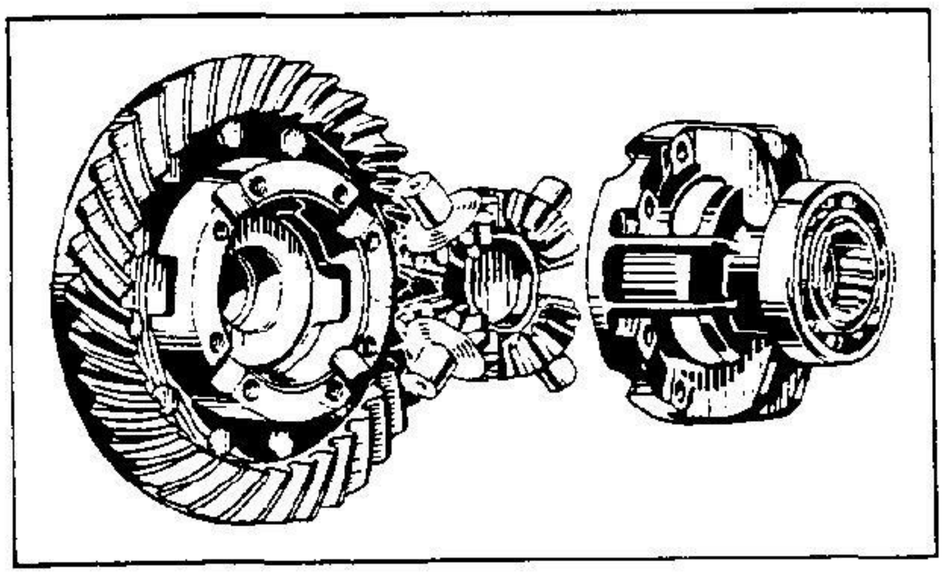

COMPARATIVE SPECIFICATIONS

TRUCK	1932	1933
Axle housing diameter at center	13 3/4	14 5/8
Axle housing thickness at spring seats	1/4	9/32
Axle housing reinforcement	5/32 welded	1/4 integral
Drive pinion mounting	Overhung	Straddle
Pinion bearing spacing	3.490	2.235
Front pinion bearing outside diameter	3.149	3.937
Front pinion bearing bore	1.378	1.772
Front pinion bearing width	1 3/8	1 9/16
Front pinion bearing ball diameter	1/2	19/32
Number of balls in front pinion bearing	24	26
Rear pinion bearing outside diameter	3.937	2.441
Rear pinion bearing bore	1.378	.984
Rear pinion bearing width	63/64	43/64
Rear pinion bearing ball diameter	3/4	13/32
Number of balls in rear pinion bearing	9	11
Drive pinion thread diameter	1 5/16	1 13/32
Drive pinion spline diameter	1 3/16	1 9/32
Ring gear pitch diameter	11 3/4	12 1/4
Ring gear tooth face	1.455	1.495
Ring gear web thickness	7/16	1/2
Number of ring gear rivets	10	12
Ring gear rivet diameter	3/8	7/16
Ring gear thrust pad	Fixed	Adjustable
Differential case flange diameter	9 3/4	10 1/8
Number of differential case ribs	10	12
Thickness of differential case ribs	1/4 to 5/16	5/16 to 3/8
Number of differential cover bolts	4	8

CHEVROLET 1933 COMMERCIAL ENGINEERING FEATURES

	1932	1933
Number of differential cover ribs	6	8
Number of differential pinions	2	4
Differential bearing cap width	1 13/32	1 15/32
Differential bearing cap bolt diameter	9/16	11/16
Differential bearing cap bolt spacing	4 3/4	4 7/8
Torque tube diameter at rear end	2.93	3.19
Torque tube mounting	In differential carrier	Separate bolted flange
Propeller shaft diameter at center	1.213	1.307
Propeller shaft spline diameter	1.19	1.28
Propeller shaft front spline width	.182	.197
Propeller shaft rear spline width	.187	.202
Standard axle ratio	5.43 : 1	5.43 : 1
Optional axle ratio	None	6.17 : 1
LIGHT DELIVERY		
Axle housing overall length	49 1/2	55 5/16
Banjo outside diameter	11 1/16	11 5/16
Banjo reinforcement	1/8 separate	5/32 integral
Brake flange	Malleable iron	Pressed steel
Differential case	2 piece	1 piece
Differential bearing span	5 23/32	6 7/32
Differential case flange diameter	7 1/4	7 7/16
Differential case ribbing	4 radial	4 radial,4 lateral
Differential pinion pitch diameter	2.100	2.216
Differential pinion bearing length	.910	.965
Differential gear pitch diameter	3.360	3.545
Differential carrier bolt circle	9 11/16	9 13/16
Differential carrier flange diameter	10 7/16	10 3/4
Differential carrier ribbing	4 radial	8 warped, radial and lateral
Ring gear and pinion diametral pitch	4.373	3.947
Teeth in gear	41	37
Teeth in pinion	10	9
Gear ratio	4.100 : 1	4.111 : 1
Rear pinion bearing type	Radial	Pre-loaded radial
Bore	1.378	1.574
Number and diameter of balls	11 - 17/32 diameter	14 - 7/16 diameter
Pinion bearing spacer	Loose	Integral
Ring gear rivet circle	6 1/16	6 5/32
Number of ring gear rivets	10	12
Axle shaft design	Tapered spindle	Hub forged integral
Wheel bearing	New Departure ball	Hyatt roller
Wheel bearing oil seal	Felt	Leather with coil spring

BRAKES

The larger front brakes with wider linings and heavier operating parts, described under passenger car features, are also used on the Light Delivery and both the long and short wheelbase trucks. The larger passenger car rear brakes are also used on the Light Delivery.

The passenger car "cut-in" system of brake linkage is also incorporated in the Light Delivery line. This linkage permits operation of both the front and rear brakes by either the foot pedal or the hand brake lever. It conforms to the "Hoover Code", and is so designed that no part which is subject to failure is common to both means of operation. All the features of this braking system which are discussed in detail under the passenger car heading are also present in the Light Delivery line.

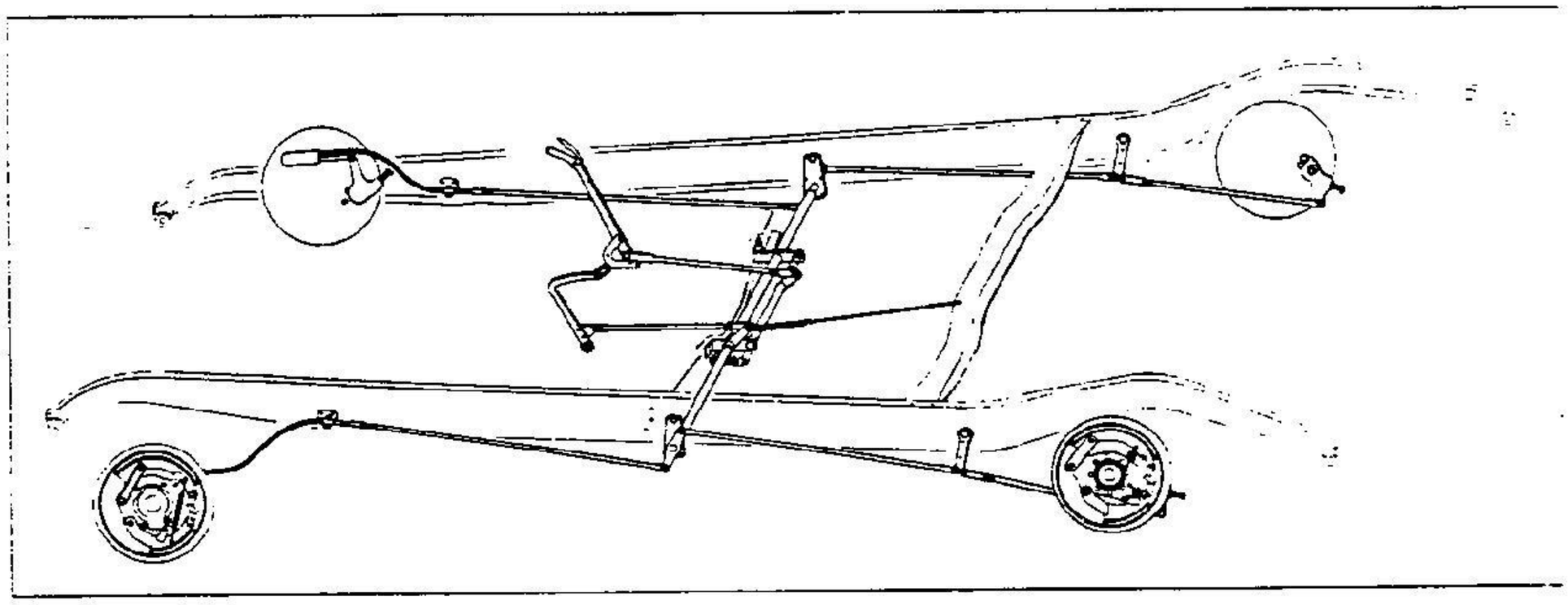

COMPARATIVE SPECIFICATIONS

	1932	1933
Truck front, Light Delivery front and rear		
Brake drum inside diameter	11 1/2	12
Brake drum flange diameter	13 5/16	13 13/16
Brake lining width	1 1/2	1 3/4
Overall length of short linings	5 29/32	6 3/16
Overall length of long linings	11 21/32	12 5/32
Service brake lining area per brake	26.35 sq.in.	32.10 sq.in.
Total service brake lining area	105.4 sq.in.	128.4 sq.in.
Parking brakes	Separate	Cut-in
Brake shoe web thickness	1/8	3/16
Bearing plate thickness	3/32	5/32
Anchor link section	Flat	Channel
Brake shoe guide thickness	5/32	3/16
Notches in hand brake sector	6	7
LIGHT DELIVERY		
Service brake cross shaft diameter	15/16	1 1/8
Number of hand brake cross shafts	3	1

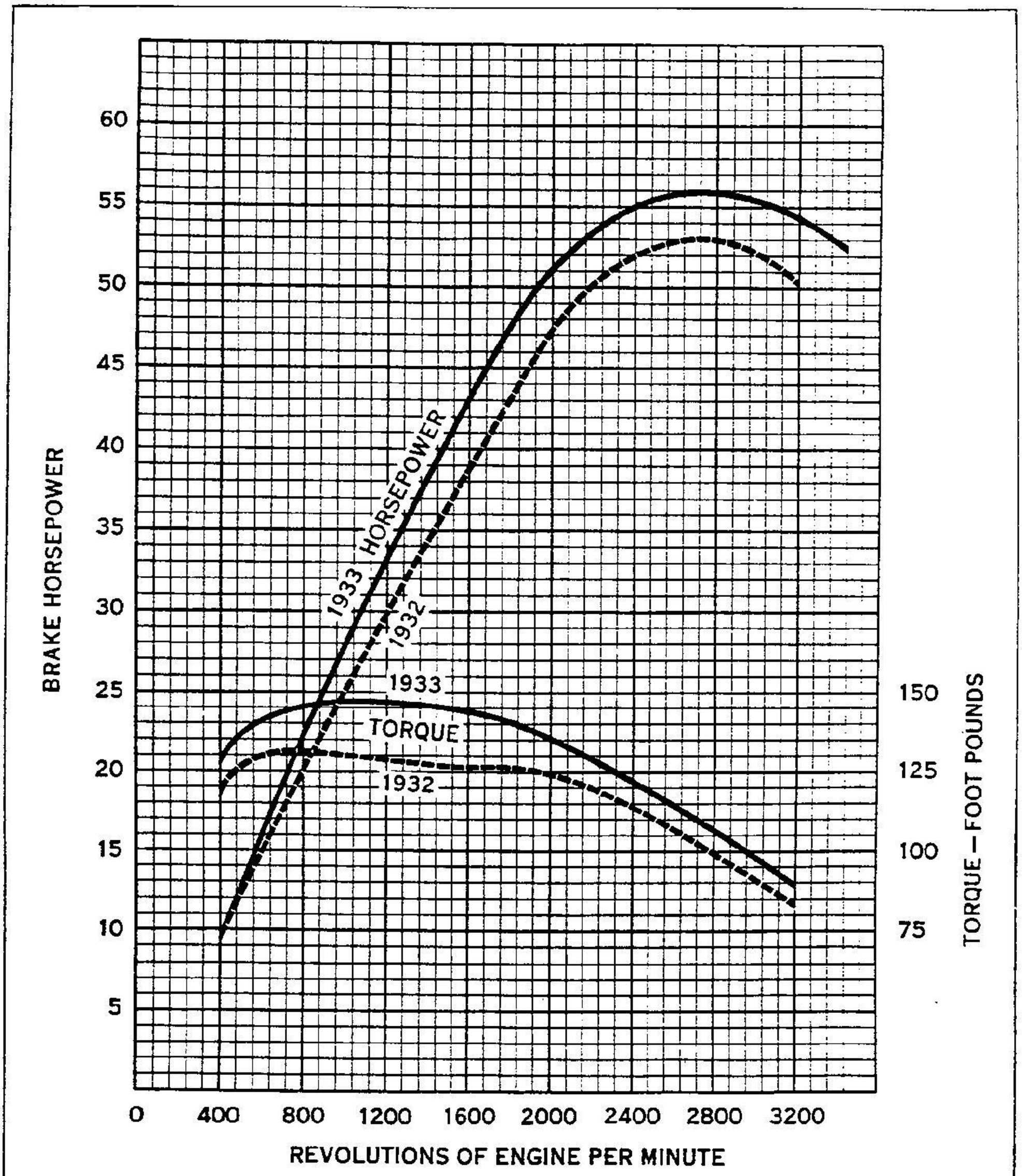

COMPARISON OF POWER AND TORQUE

CHEVROLET 1933 COMMERCIAL ENGINEERING FEATURES

ENGINE

The special truck engine which supplies the motive power for the entire truck and Light Delivery line is more powerful, smoother and more economical to operate. It incorporates all the design features of the passenger car engine. The horsepower output thruout the speed range is increased. The increase, however, is relatively greater in the low and medium speed ranges. At 2750 revolutions per minute the maximum of 56 horsepower is developed. 28 horsepower is developed at 1000 R.P.M. while the output at 2000 R.P.M. is 51 horsepower. The torque, of course, is also increased thruout the speed range, reaching the maximum of 146 foot-pounds at 1000 R.P.M.

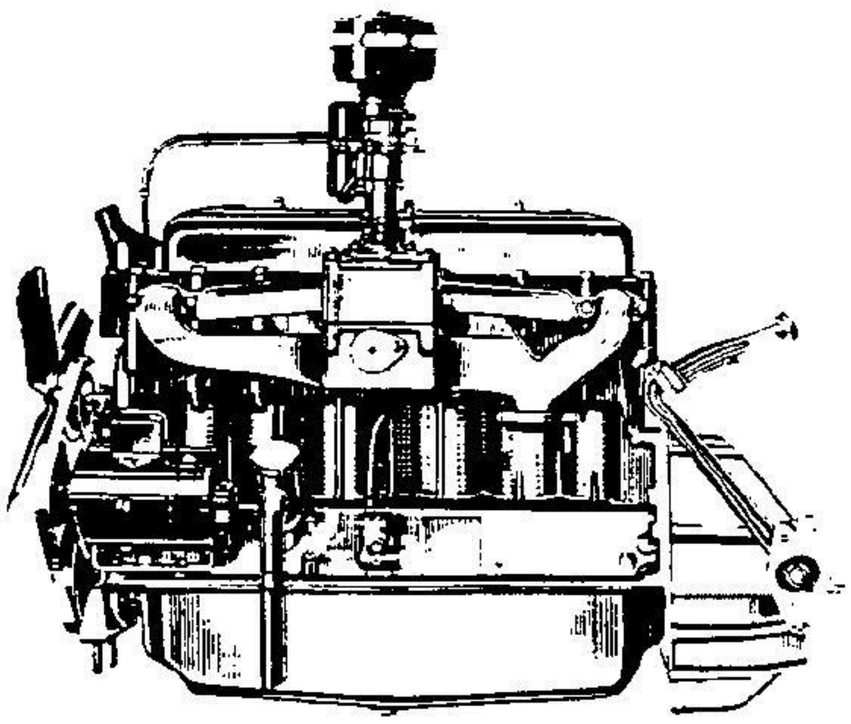

In the Light Delivery chassis the truck engine is rubber-mounted on the same mounting units which were used in the 1932 passenger car line. By virtue of their design, these rubber mountings are semi-resilient noise and shock insulators. At the three points upon which the engine itself is mounted, the rubber is securely restrained from excessive movement by stamped retainers which also protect the rubber from oil and water. The rubber units were scientifically developed to provide for stable mounting of the engine and still to provide just enough insulation to eliminate noise and to provide just enough directional flexibility to insure smoothness.

At the front, two engine hold-down bolts located close together, rigidly hold cast brackets to the base of the front engine plate. These brackets are surrounded by

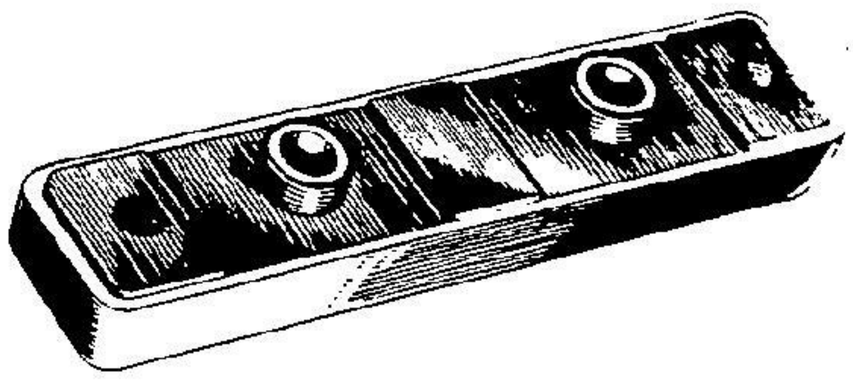

moulded rubber which completely isolates them from all other metal parts. This entire front unit is housed in a drawn stamping, which bolts rigidly to the underside of the front cross member.

At the rear end of the engine a rubber mounting unit is provided at each side. In each of these units a sturdy drop forging is securely bolted to the forward face of the clutch housing. Supporting arms at the sides of these forged brackets are encased in moulded rubber casings, and these assemblies are housed in rigid stamped retainers formed so as to retain the rubber. These stampings are securely bolted to the rear engine support cross

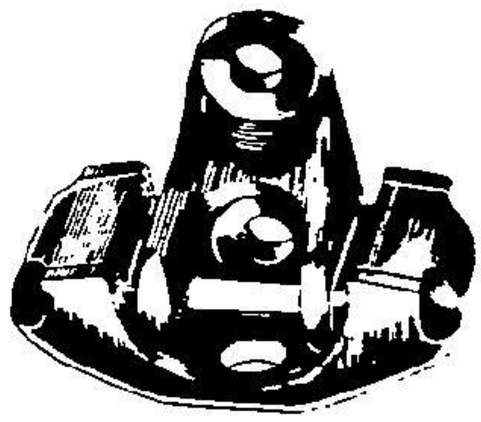

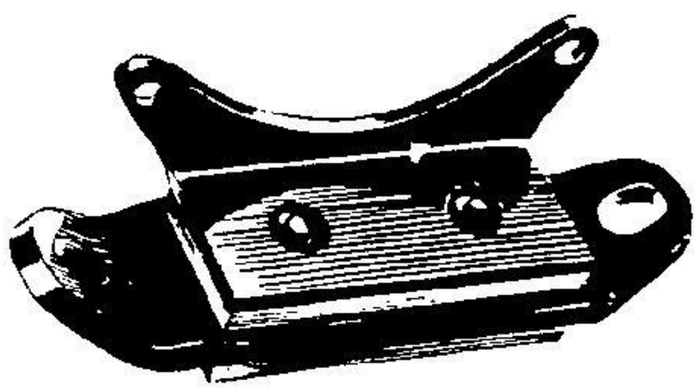

member. By virtue of their shape, these units are well adapted to absorb vibration thru a wide speed range. The rubber insulated steady rest at the rear end of the Light Delivery transmission is the same as that used at this point during 1932. In the long and short truck chasses the metal mountings at the rear are retained; but the cushion springs at the front end are replaced by the same rubber mounting unit now used on the Light Delivery.

COMPARATIVE SPECIFICATIONS

	1932	1933
Stroke	3 3/4	4
Piston displacement	194 cu.in.	206.8 cu.in.
Maximum horsepower	53	56
Engine R.P.M. at maximum horsepower	2800	2750
Horsepower at 1000 R.P.M.	24.7	28
Horsepower at 2000 R.P.M.	47.4	51
Maximum torque - foot pounds	131	146
Engine R.P.M. at maximum torque	800	1000
CRANKSHAFT		
Weight	53#	63 1/2#
Counterweight radius	3 1/8	3 3/8
Crank pin diameter	2	2 1/8
Crank pin length (effective)	1 25/64	1 17/64
Center main bearing length (effective)	2	1 7/8
Thickness of short arms	27/32	31/32
Thickness of long arms	1 1/4	1 3/8
Static balance limits	1 oz.inch	1/2 oz.inch in one plane
Permissible dynamic unbalance	1 oz.inch	None
HARMONIC BALANCER		
Outside diameter of weight	6 1/32	6 1/2
Width of springs	3/8	5/8
Number of springs	48	80
Tuning - cycles per second	145 - 165	135 - 150
FLYWHEEL		
Drive	1 dowel, 4 bolts	5 dowels
Web thickness	13/32	5/8
Dynamic balance limits	1 oz.in.	1/2 oz.in.
CONNECTING ROD		
Length	7	7 1/2
Bolt centers	2 9/16	2 11/16
Projected bearing area - sq.in.	2.8	2.7
Babbitt thickness	.047	.024
Bolt head diameter	5/8	13/16
PISTON		
Number of oil return holes	8	12
Size of oil return holes	7/64	9/64
Width of oil control rings	5/32	3/16
SPARK PLUG		
Type	G-10	K-9
Thread diameter	18 m/m	14 m/m
Position of electrodes	In pocket	At edge of chamber
Gasket	Copper and asbestos	Hollow copper

	1932	1933
VALVE MECHANISM		
Width of valve seats	.045-.065	.030-.050
Rocker arm center distance	3 3/16	3 5/32
Radius of rocker arm contact surface	1/2	3/8
Rocker arm bushing	Split, rolled bronze	Solid, cast bronze
Valve spring pressure with valve closed	44#	57#
Valve spring pressure with valve open	80#	95#
Camshaft center bearing	Cast iron (in case)	Steel-backed babbitt
Spark advance control	Centrifugal & manual	Centrifugal & vacuum
Maximum automatic spark advance	38°	46°
Additional advance by vacuum control	None	12°
Octane Selector	None	Manual
Distributor body diameter	2 19/32	3 9/32
Depth of flat on oil pump body	3/64	5/64
Oil pan flange design	Plain	Ribbed
Oil pan gasket thickness	1/16	3/32
Oil pan gasket width	13/16	1
Oil pan seal thickness	3/16	7/32
Oil filler tube clamp	Bolted	Crimped
Offset of oil level gauge	None	1 1/2
Water pump front bushing lubrication	Oil hole	Oil cup and annulus
Fan blade angle	90°	75°-105°
Carburetor metering rod	2 steps, no spring	3 steps, with spring
INLET MANIFOLD		
Center port section	Round	Flat
End port section	Round	"D" section
Arm position	Horizontal	Inclined
Heat valve control	Manual	Thermostatic
ENGINE MOUNTINGS		
Front mounting	Coil springs	Rubber insulation
Rear mounting (Light Delivery)	Metal to metal	Rubber insulation

CLUTCH

The Light Delivery clutch is improved by the adoption of all of the features which are incorporated in the passenger car clutch. It embodies the same heavier, lower-rate springs, the braided-moulded friction rings, the stamped fork with heavier gauge retainers, increased disc warpage and heavier springs in the disc.

These same features, with the exception of the braided-moulded friction rings, are also present in the ten inch Truck clutch. Its friction rings, which are still of moulded construction, are now more securely attached to the clutch disc by a greater number of rivets. With these improvements the increased torque of the larger engine is transmitted smoothly and quietly and the life of the clutch parts is increased.

COMPARATIVE SPECIFICATIONS

	1932	1933
Pressure exerted by each clutch spring	104#	114#
Total clutch spring pressure	936#	1026#
Clutch disc warpage	.025-.045	.035-.060
Clutch disc spring pressure	65#	85#
Light Delivery clutch friction rings	Moulded	Braided-moulded
Spring retainer diameter	4 3/4	4 7/8
Truck friction ring rivets	12	16
Clutch fork	Forged	Stamped

TRANSMISSION

The Light Delivery transmission includes all of the new features of the passenger car transmission. The new helical constant-mesh gears insure quiet operation. The improved synchronizers provide for smoother shifting; and the new gear ratios, in combination with the more powerful engine, improve the performance.

During the 1932 season the Truck transmission was improved by the adoption of larger, more effective rivets to attach the first speed gear to the second speed gear. These rivets are of the same type as those used to attach the ring gear to the differential case. They are 3/8 in diameter and made of high carbon steel with a flattened spherical head which seats in a chamber in the gears, insuring a permanent joint that will not loosen even when maximum torque is transmitted. Gear shifting is improved and intermeshing is prevented by the addition of metal at the front end of the reverse shifter yoke, and by the cyanide hardening of the edge of the shifter interlock guide plate.

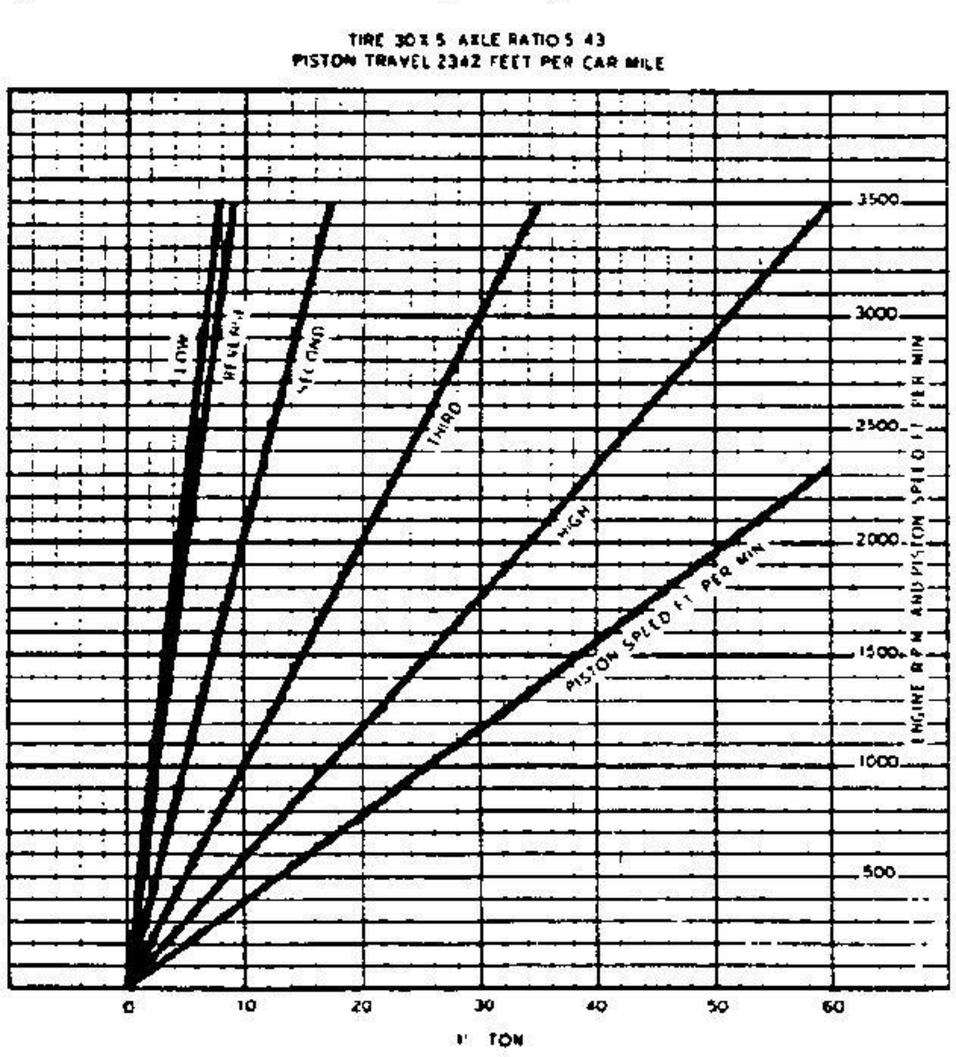

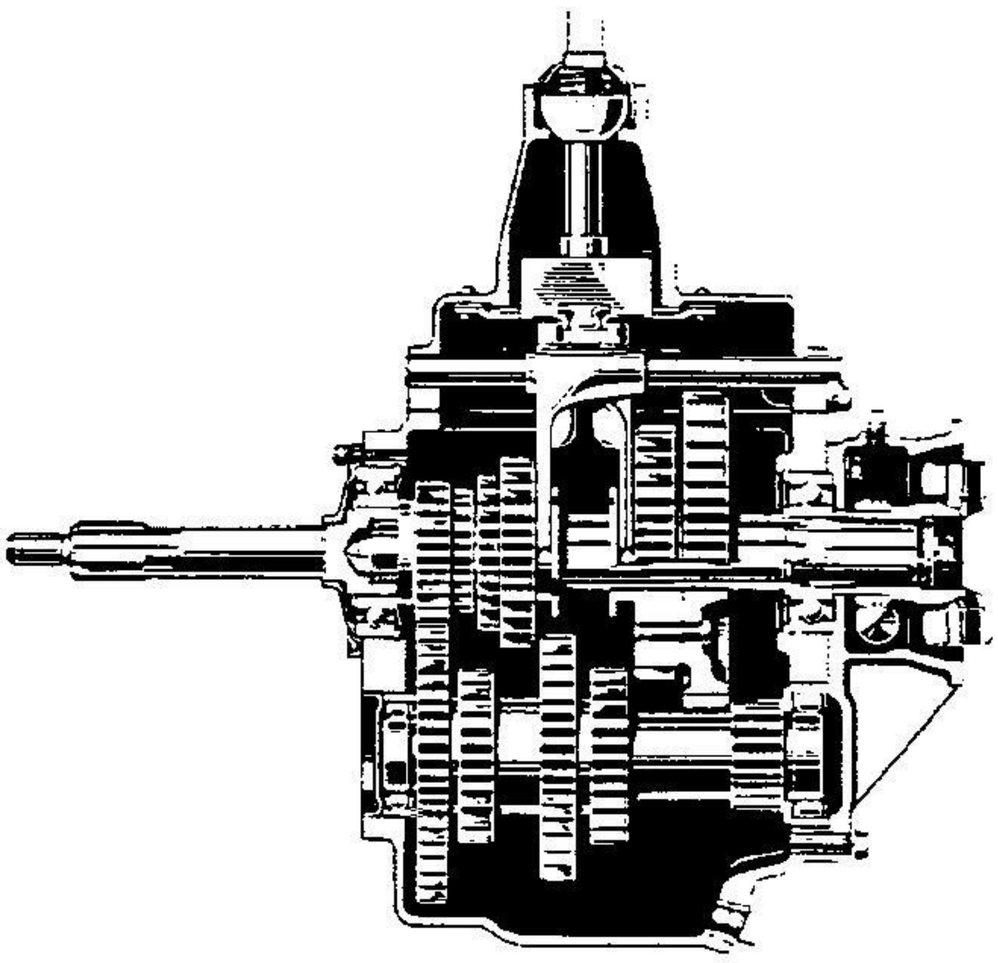

COMPARATIVE SPECIFICATIONS

LIGHT DELIVERY	1932	1933
Type of constant mesh gears	Spur	Helical
First speed gear ratio	3.17 : 1	3.02 : 1
Second speed gear ratio	1.82 : 1	1.70 : 1
Reverse gear ratio	3.57 : 1	3.40 : 1
Outside diameter of rear synchronizing cone.	3.86	3.70
Outside diameter of front synchronizing cone	3.00	2.84
TRUCK		
First and second speed gear rivet diameter..	1/4	3/8
Material	Low carbon steel	High carbon steel
Head shape	Button	Spherical
Heat treatment of guide plate	None	Cyanide
Relief at end of reverse shifter yoke	1/4	1/16

UNIVERSAL JOINT

The single universal joint on the short wheelbase truck and both joints on the long wheelbase truck are completely redesigned to provide greater strength and smoother operation. The joints on both lines of trucks are identical except for the square and splined holes to fit the various shafts to which they assemble.

The new and improved joint is of the spider type with four cylindrical bearings. The spider is generously proportioned, and is made from a steel drop forging, heat treated to combine core toughness with surface hardness. The four trunnions are carefully ground to close limits. A flat surface machined on each of the trunnions provides for the entrance of lubricant. Both yokes are drop forged from high carbon steel and heat treated to obtain maximum strength. They are heavier and stronger at the points of maximum loading. The hardened steel bearings are ground inside and outside to insure smooth action on the spider and positive seating in the yokes. They are assembled from the sides of the joint and are retained in the yokes by spring steel snap rings. The design of the new universal joints lends itself to precision manufacture which insures proper alignment and greater durability.

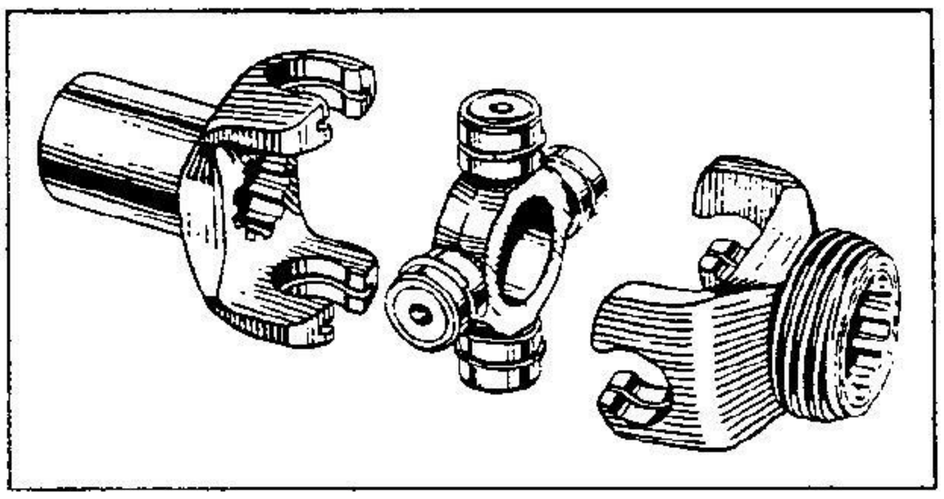

COMPARATIVE SPECIFICATIONS

TRUCK	1932	1933
Type of universal joint	Stamped ring	Four arm forged spider
Bearing type	Spherical	Cylindrical
Trunnion diameter	.812	.717
Bearing length	21/32	23/32

FUEL SYSTEM

The Light Delivery fuel tank is now mounted at the rear end of the frame instead of under the seat. It has a capacity of fourteen gallons, and is filled thru an extension filler pipe at the right side. It is longer and wider, and has a baffle plate at the left side to isolate the gauge unit from the main body of the fuel, insuring more accurate reading of the gauge on the instrument panel. The tank is mounted under the rear cross member with straps similar to those used in mounting the passenger car tank. These straps embody the same improved "T" bolt which is used on the passenger cars. The filler cap is of the spring type and engages stamped cams in the filler neck. The cork gasket is larger and is retained in the cap by its spring. With the adoption of the side filler it is necessary to provide means for venting the upper part of the tank to prevent air-lock when filling. This is accomplished by a tube inside the filler neck which extends from the top of the tank to the upper end of the filler, permitting air to escape from the tank as it is displaced by incoming gasoline. The Truck fuel tank is still mounted under the seat, but is also increased in size so that its capacity is now fifteen gallons. It is longer and wider and has a new screw cap from which the ball-checked vent is omitted. The vent is now located in the gauge unit.

The increase in the capacity of both the Light Delivery and Truck fuel tanks combined with the decreased fuel consumption of the engine increases considerably the time between refuelings.

CHEVROLET 1933 COMMERCIAL ENGINEERING FEATURES

COMPARATIVE SPECIFICATIONS

	1932	1933
LIGHT DELIVERY		
Gasoline tank location	Under seat	At rear of frame
Gasoline tank capacity	10 1/4 gallons	14 gallons
Gasoline tank length	27 9/16	36 13/16
Gasoline tank width	12 7/8	13 7/8
Gasoline tank depth	7 3/4	7 1/2
Gasoline tank filler position	At top	At side
Type of gasoline tank cap	Screw	Spring and cam
TRUCK		
Gasoline tank capacity	10 1/4 gallons	15 gallons
Gasoline tank length	27 9/16	33 1/4
Gasoline tank width	12 7/8	16
Gasoline tank depth	7 3/4	7 7/16

STEERING

In the Light Delivery and both trucks the steering gear ratio is increased to fourteen to one. This is accomplished by increasing the number of teeth in the sector circle and changing the teeth in the worm to correspond. Thus, the strength of the worm and sector is increased while their angular spacing is decreased. This increase in gear ratio reduces the effort required to steer the commercial vehicles. The mast jacket is securely held in place by a strong stamped steel clamp. The clamp bracket riveted to the frame is strengthened by an increase in the thickness of its stiffening rib.

COMPARATIVE SPECIFICATIONS

	1932	1933
Steering gear ratio	12 : 1	14 : 1
Mast jacket clamp	Malleable iron	Stamped steel
Mounting bracket rib thickness	1/4	5/16

WHEELS AND TIRES

While there is no change in the standard wheel and tire equipment on long or short wheelbase trucks, additional tire options have been added to provide special tire equipment for all conditions of service. All of the optional tires fit on the 20 x 5 rims furnished as standard equipment. 6.00-20, 6 ply balloon tires are added as an option at no additional cost. These balloon tires may be used on front and on dual rear wheels to provide greater cushioning than the standard high pressure tires.

32 x 6, 8 ply tires are available at additional cost for front wheels and dual rear wheels of both long and short wheelbase trucks. These tires permit carrying heavier loads than the standard tire equipment.

6.50-20,6 ply balloon tires are supplied optionally at additional cost for use on both long and short wheelbase trucks on front wheels and on dual rear wheels with a special spacer. These tires may also be used with single rear wheels in special cases when only light loads are carried.

7.00-20, 8 ply balloon tires are also supplied optionally at additional cost for use on both long and short wheelbase trucks on front wheels and on dual rear wheels with a special spacer. These tires may also be used on single rear wheels. The use of either of these balloon tires provides a greater cushioning effect and when used on dual rear wheels, heavier loads may be carried than when the standard equipment is used.

When either the 6.50-20,6 ply or the 7.00-20, 8 ply balloon tires are used on rear wheels, the front wheels may be equipped with 6.00-20, 6 ply balloon tires for the best results.

When the 6.50-20, 6 ply or 7.00-20, 8 ply balloon tires are used on standard dual wheels with 20 x 5 rims a special spacer is required to prevent rubbing of their adjacent side

walls. This spacer is a malleable iron casting which pilots over the wheel hub between the two wheels and spaces them 1 1/16 apart. It is attached to the hub by ten bolts which normally attach the two wheels. A male pilot of the same diameter as the wheel hub extends outward from the spacer and supports the outside wheel. Ten studs, anchored in the spacer, and located midway between the inner wheel bolts, attach the outer wheel. The regular clamp ring assembles on the outside of the outer wheel and distributes the bolt load over a larger area of the outer disc.

COMPARATIVE SPECIFICATIONS

TRUCK	1932	1933
Tires optional at no additional cost	None	6.00-20, 6 ply
Tires optional at additional cost (131 Truck)	32 x 6, 10 ply	32 x 6, 10 ply
Tires optional at additional cost (131 and 157 Trucks)	None	(32 x 6, 8 ply (6.50-20, 6 ply (7.00-20, 8 ply

SHEET METAL

On the Light Delivery and on both long and short wheelbase trucks the front fenders, radiator and headlamps are mounted as a unit. This stabilized unit mounting, which was an outstanding feature of the 1932 passenger line, eliminates excessive movement of the component front end parts relative to adjacent parts. With the elimination of relative motion, wear, squeaks and rattles are eliminated. Motion of the front fenders, radiator and headlamps is caused primarily by frame weave when traveling over rough roads.

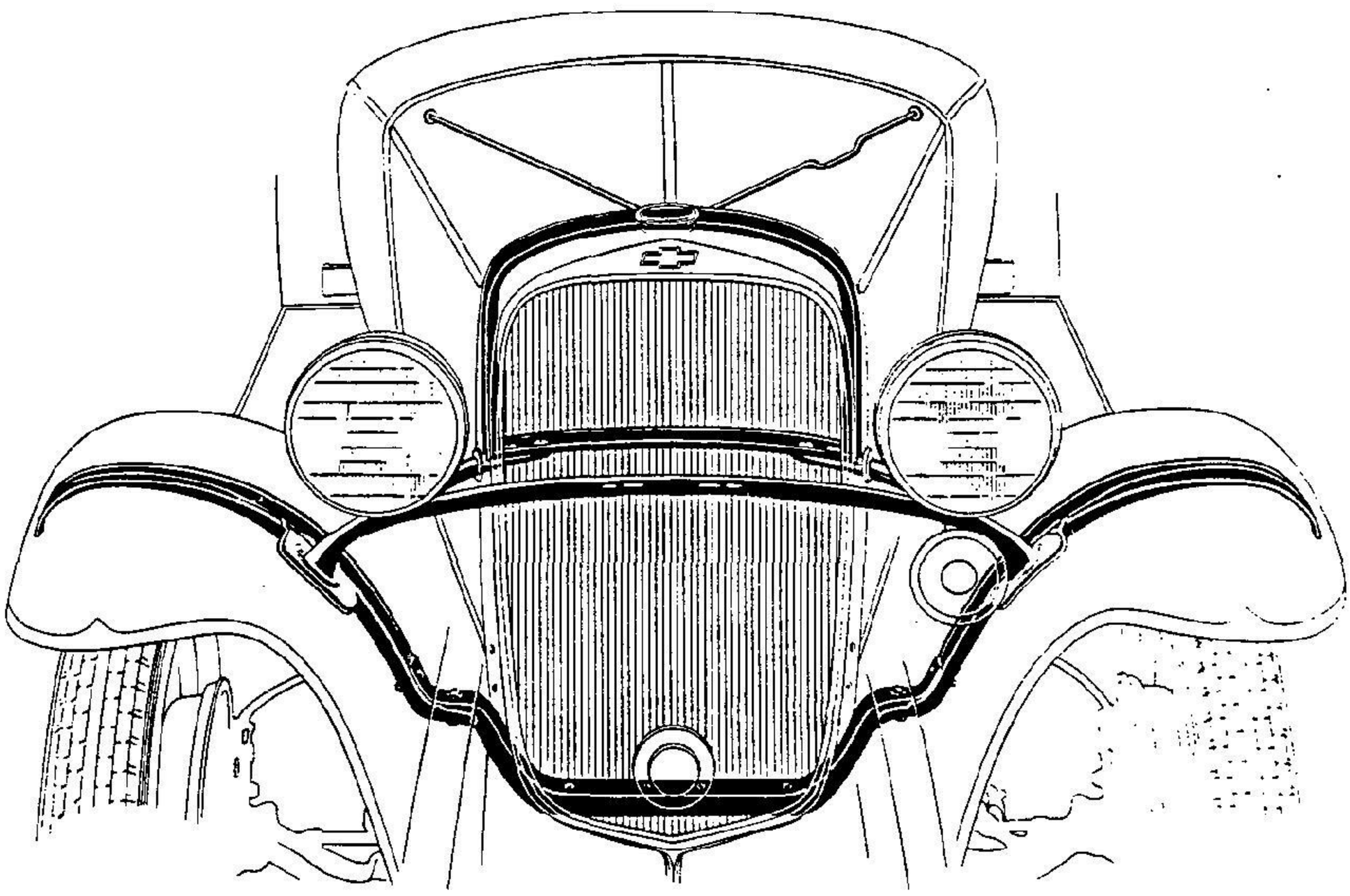

In trucks of conventional design, movement of the frame is transmitted directly to the front fenders and headlamps since these parts are usually mounted directly on the frame side rails. The radiator, in conventional designs, is also mounted directly on one of the frame members. Some of its movement, however, is usually eliminated by bracing it to the body, thus absorbing some of the frame movement in the radiator structure. When this occurs leakage in the radiator core usually results. With the adoption of the stabilized front end mounting the radiator core in Chevrolet trucks and Light Delivery are relieved of all undue strains and resulting leaks.

MOUNTING

The 1933 design provides a single fender mounting unit which supports the radiator, fenders and headlamps at a neutral point in the center of the frame front cross member. The support is insulated from the frame by a rubber cushion and is held in place by two bolts spaced relatively close together at the center. The front fenders and radiator are mounted on this support and the fenders are secured to each other by means of a rigid stamped tie bar. This, in turn, is braced to the radiator structure by sturdy braces attached under each headlamp mounting and extending to the radiator. The radiator shell, which is strongly reinforced, is braced to the dash by a "V" brace.

Thus, stability of the entire front end as a unit and in relation to the body is insured. The frame is permitted to absorb road shocks in the usual manner and the absence of relative motion between the front end parts eliminates squeaks and rattles and increases their durability. The driver has a visual sense of stability of the truck, since the visible parts move only as a unit with the body, with which the driver must also move. These desirable conditions are attained without affecting frame rigidity.

FRONT FENDERS

The front fenders are made from heavier gauge metal with deeper crowns and skirts, and a wider bead at their edges. At the front of the crown the bead blends into a graceful point. The portion of the skirt which covers the front end of the frame side rails is shaped to form a double bead which covers the edge of the radiator splash guard and lends a sturdy, clean-cut appearance to the front end.

RADIATOR SPLASH GUARD

The radiator splash guard combines slightly bulging panels with a beaded lower edge which harmonizes with the fender and radiator contours. Because of the stabilized front end

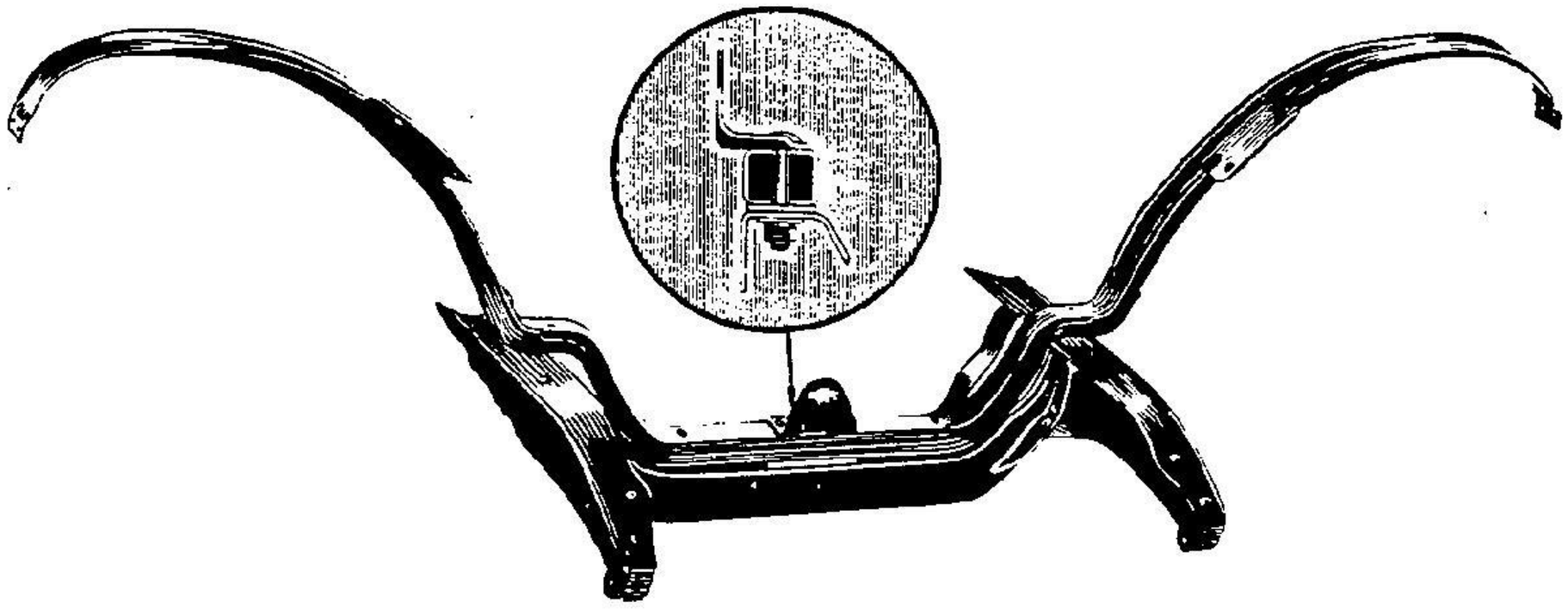

mounting, it is possible to fit the splash guard closely to the radiator shell.

HOOD

The hood is redesigned to correspond to the new radiator shape, blending gracefully into the cowl contour. Embossed panels stiffen the hood and frame the vertical louvres. An internal catch is provided on each side panel to hold the hood securely in the closed position. A single black enameled handle on each side operates the catch. The front catch brackets are mounted on the radiator and the rear brackets are on the dash. This inside catch is more convenient to operate and much neater in appearance. Rubber cushions prevent the hood from rattling on the cowl.

REAR FENDERS

The rear fenders on the Light Delivery have deeper crowns and longer rear ends. The general contour and bead treatment is in harmony with that of the front fenders.

RUNNING BOARDS AND APRONS

The running boards on the Light Delivery and both trucks are wider at the front end and have a larger side bead. On all dual wheel trucks the short running boards are used. The running board aprons on both trucks and the Light Delivery are of heavier gauge metal and are reinforced at their attaching flanges.

COMPARATIVE SPECIFICATIONS

	1932	1933
Front end mounting	Individual brackets	Stabilized mounting
	Metal to metal	Rubber insulated
Front fender gauge	.031	.038
Front fender width at running board	9 15/16	11 21/64
Front fender bead width	15/32	9/16
Light Delivery rear fender crown depth	3 9/16	4 1/16
Hood catches	2 separate, outside on each side	Single, inside on each side
Running board apron gauge	.028	.031
Rubber cushions between hood and cowl	None	2

ELECTRICAL EQUIPMENT AND INSTRUMENTS

The headlamps on the trucks and the Light Delivery are in the form of long parabolic cones. The lamp body is black enameled and the moulding ring is chromium plated. The convex ribbed lenses change the light pattern to give better road illumination for a greater distance ahead.

The headlamp tie bar is a black enameled, single, inverted "U" section stamping which is used with the front fender support and radiator arch to tie the fenders, radiator and headlamps together as a unit. Fender pads are securely bolted thru the fenders and fender irons to the tie bar, which also provides a mounting for the headlamps and the front license tag. On the Light Delivery the stop light derives its current from the ignition circuit and is protected by a separate fuse as on the passenger car models. The instrument panel arrangement is improved as described under passenger car features. The finish plate, however, is omitted from these models.

The ignition coil and lock arrangement used on the passenger cars is also incorporated in both trucks and the Light Delivery.

COMPARATIVE SPECIFICATIONS

	1932	1933
Stop light circuit fuse (Light Delivery)	General lighting system	Separate
Speedometer indicator	Stationary	Rotating
Speedometer shaft attachment	Clamp plate	Nut
Ignition lock connection	Distributor	Coil
Headlamp lens type	Flat "Twilite"	Convex "Twilite"
Headlamp lens prism location	External	Internal

RADIATOR

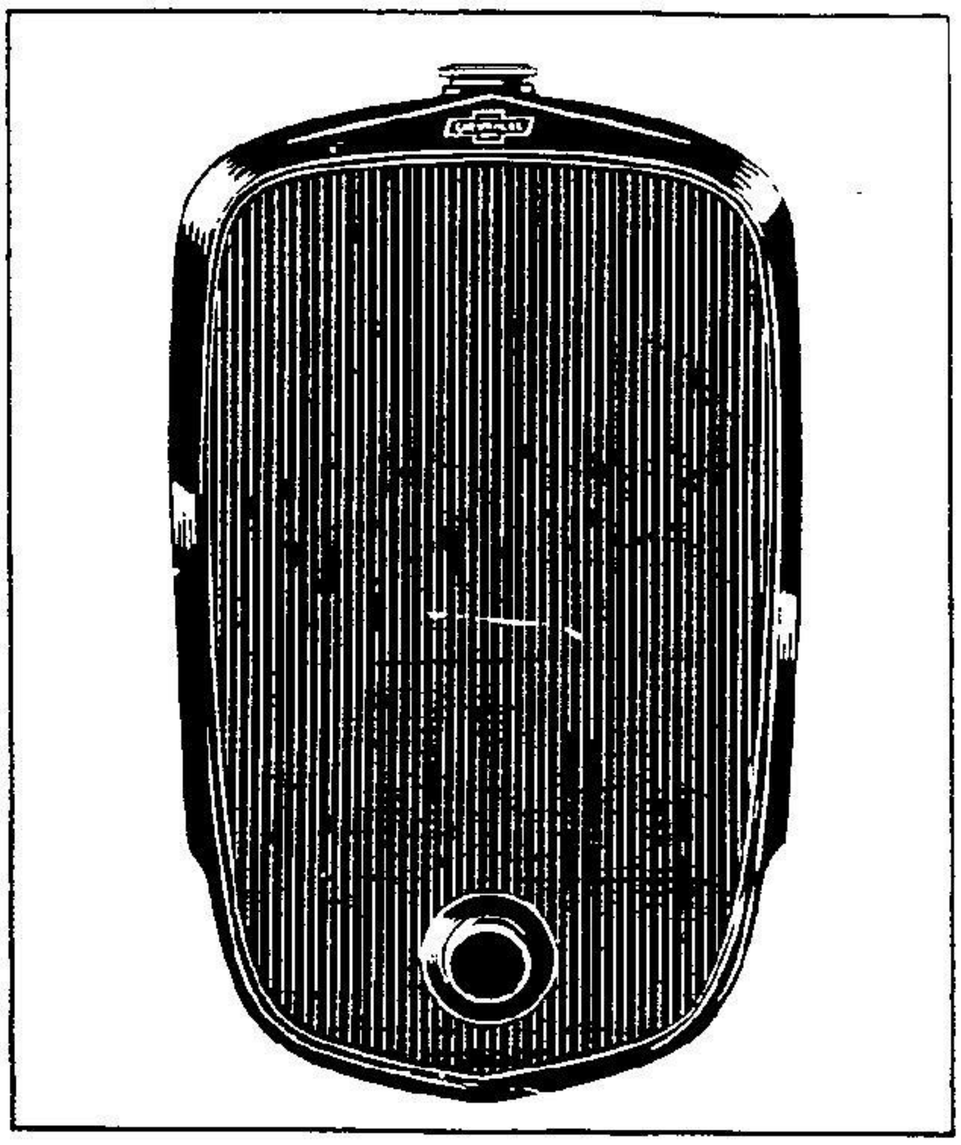

The radiator on the Light Delivery and on both trucks is of the same shape and design as that used on 1932 passenger cars. The grille, however, is black enameled and the shell is painted the same color as the body. The shell is quite broad across the top and tapers to a narrower width at the bottom, extending well below the starting crank hole cover. The grille is an integral part of the radiator, being securely clamped in place to prevent rattles and squeaks. It has square meshes stamped in relief with the vertical lines accentuated. At the bottom the radiator is mounted on the fender support with a fabric shim between to prevent squeaks. At its upper end the radiator has a supporting yoke mounted inside the shell with a cross bar at the rear of the core. Each side of this support is attached to the headlamp tie bar by a brace which reaches thru the shell from which it is insulated by a rubber grommet. This upper support further insures the stabilized unit mounting of the fenders, headlamps and radiator as described before. The all copper type of core which has proved so successful on both the long and short trucks is now used on the Light Delivery, replacing the copper and brass type of construction formerly used. The exposed core area has been increased on all models.

COMPARATIVE SPECIFICATIONS

	1932	1933
Radiator shape	Tapering outward at bottom	Curving inward at bottom
Exposed core area	389 sq.in.	396 sq.in.
Radiator mounting	On front cross member	On fender support braced to headlamp tie bar
Radiator grille	None	Built-in stamping
Light Delivery core	Copper and brass	All copper

WHEEL CARRIER

On the Light Delivery the spare wheel is carried in a fender well carrier on the left side. The fender well and its braces are of the same general design as were used on some of the 1932 passenger car models. The fender well is rigidly braced to the frame. The lock bar extends upward at an angle and is supported by a sturdy brace which mounts in a bracket at the cowl and bolts thru a reinforcement to the front of the dash. A stamped clamp and "T" handle nut hold the wheel and tire in place. The "T" handle is chrome plated and all other parts of the fender well carrier are black enameled.

COMPARATIVE SPECIFICATIONS

	1932	1933
Location	Under frame	In left fender well

CAB

The cab, which is applicable to both of the truck chasses and the Light Delivery chassis, is improved in design and construction.

Provision is made for the larger Truck gasoline tank by an increase in the height of the seat side support and by the adoption of a stamped steel riser. A bead along its upper edge and five vertical embossed ribs stiffen the riser. The metal riser construction not only takes up less space, but it is also more durable than the former wood structure and is less susceptible to gouging and abrasion. A pressed steel strainer is added at the center of the seat. It is deeply ribbed and is attached to the riser by two bolts and to the seat rear support by two screws. This strainer serves to brace the riser, support the cushions, and to seal the space between the cushions.

The dash panel has been improved by an increase in the thickness of its legs. This increases the strength at the rivet joint and prevents breakage. The cowl ventilator operating handle is located farther toward the left to improve its accessibility and to clear the speedometer in its new location at the center of the panel. The instrument panel is strengthened by the addition of a spot welded reinforcement at each end. The doors are finished on the inside with an attractive pressed steel trim panel having embossed edges and three vertical ribs. The panel is insulated from the door frame by heavy cotton wadding at the top and bottom. It is much more durable than fabric trim and is finished in black Duco.

The windshield is glazed with shatter-proof glass to insure the safety of the driver. The windshield frame is entirely new. Its component parts are of heavier gauge steel, welded at the lower corners. The upper corners are secured by screws. The windshield half of the hinge is formed integral with the upper member of the frame and the radius of the hinge member is larger to permit disassembly of the hinge with the windshield closed. The rubber weatherstrip is moulded with a double bead to insure positive retention in the frame. It is made in a single piece with vulcanized joints at the lower corners. It provides better sealing along the windshield pillar by contacting the pillar face instead of only the pillar edge.

COMPARATIVE SPECIFICATIONS

	1932	1933
Seat front riser	Wood	Stamped steel
Seat strainer	None	Pressed steel
Gauge of dash panel legs	.050	.0625
Door trim panel material	Ragboard	Pressed steel
Instrument panel reinforcements	None	Two
Windshield glass	Plate	Shatter-proof plate
Windshield weatherstrip	Three piece	One piece

BODIES

During 1932 the line of truck bodies was increased by the addition of four new types for use on the long wheelbase truck chassis. These four new bodies are: Farm Body, Farm Tip Top Body, Farm Rack Body, and School Bus Body.

FARM BODY

The farm body, which is for use on the long wheelbase truck, has been developed especially for farm work and has a load capacity of 88 bushels. It is very well made and incorporates the steel cross sills and floor board wear irons used on the platform body for the long wheelbase truck. The sides and front end panel are made of heavy gauge steel and the rear panel is made of wood and contains a removable grain gate. The side panels are 18 inches high and the load space is 143 inches long by 75 inches wide. Four combination stake pockets and side

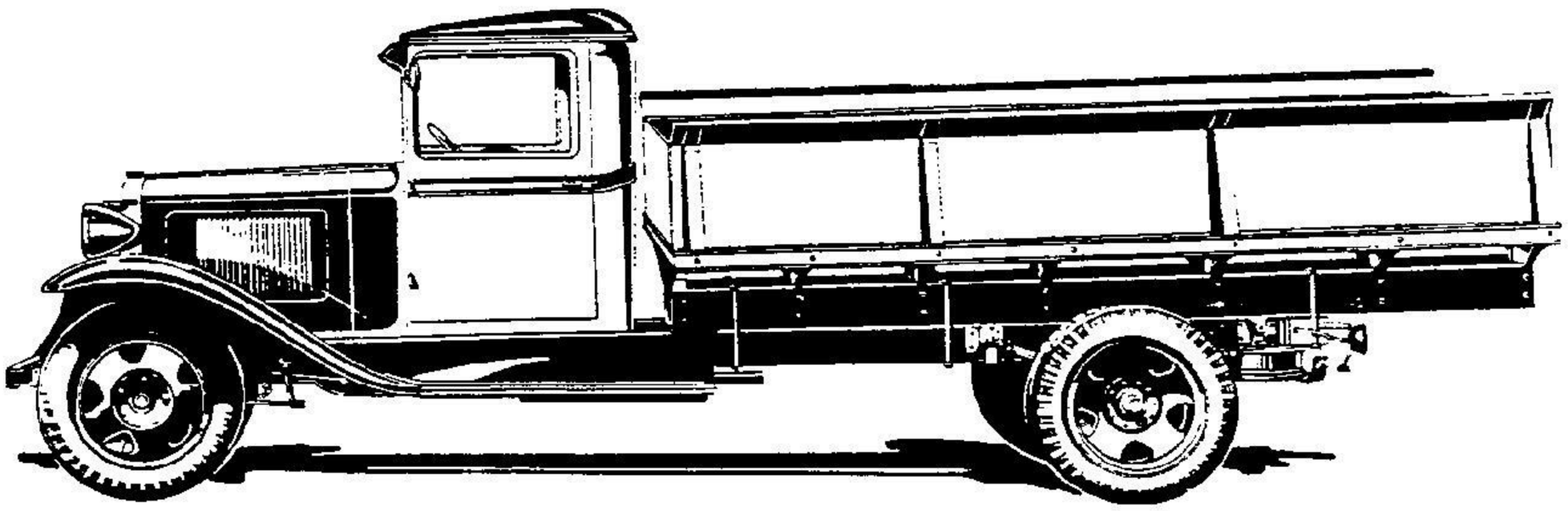

braces are welded to each side to provide additional strength and make the truck adaptable for using stake racks. A beaded angle rub rail along each side protects the body.

FARM TIP TOP BODY

This body is exactly the same as the farm body with tip tops added to increase the body load capacity to 136 bushels. The tip tops are 9 1/2 inches high, increasing the effective side panel depth to 27 1/2 inches.

FARM RACK BODY

The farm rack body is a combination of the farm body and 66 inch cattle racks. The cattle racks are held rigidly in position by the pressed steel stake pockets welded into the heavy sides of the body, and are also

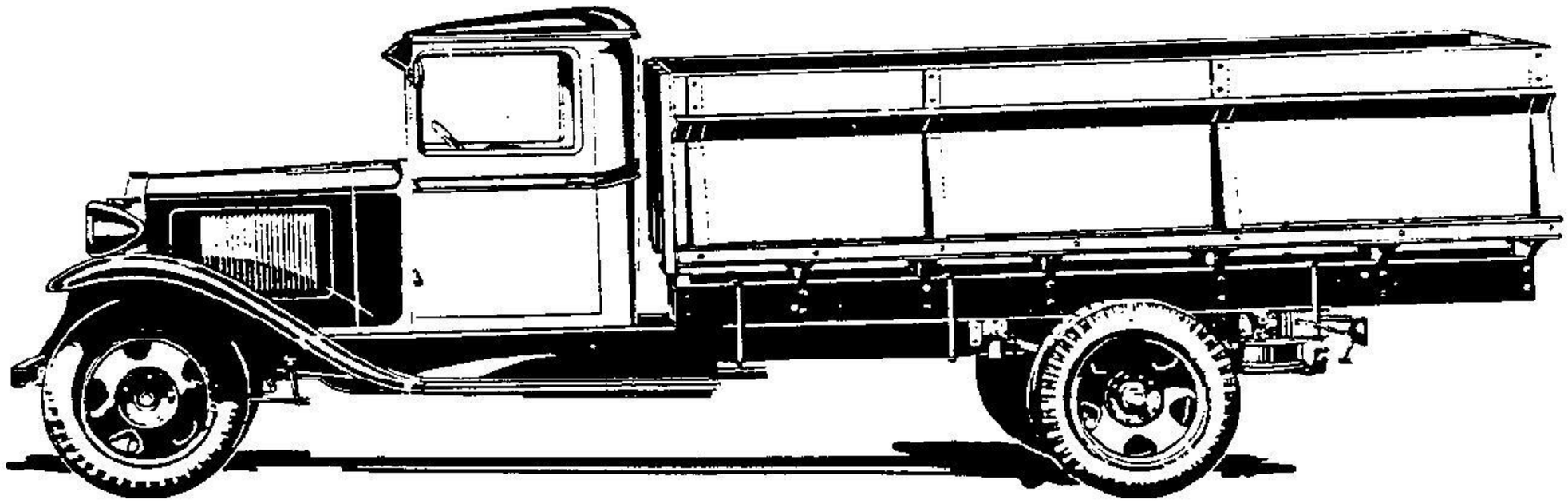

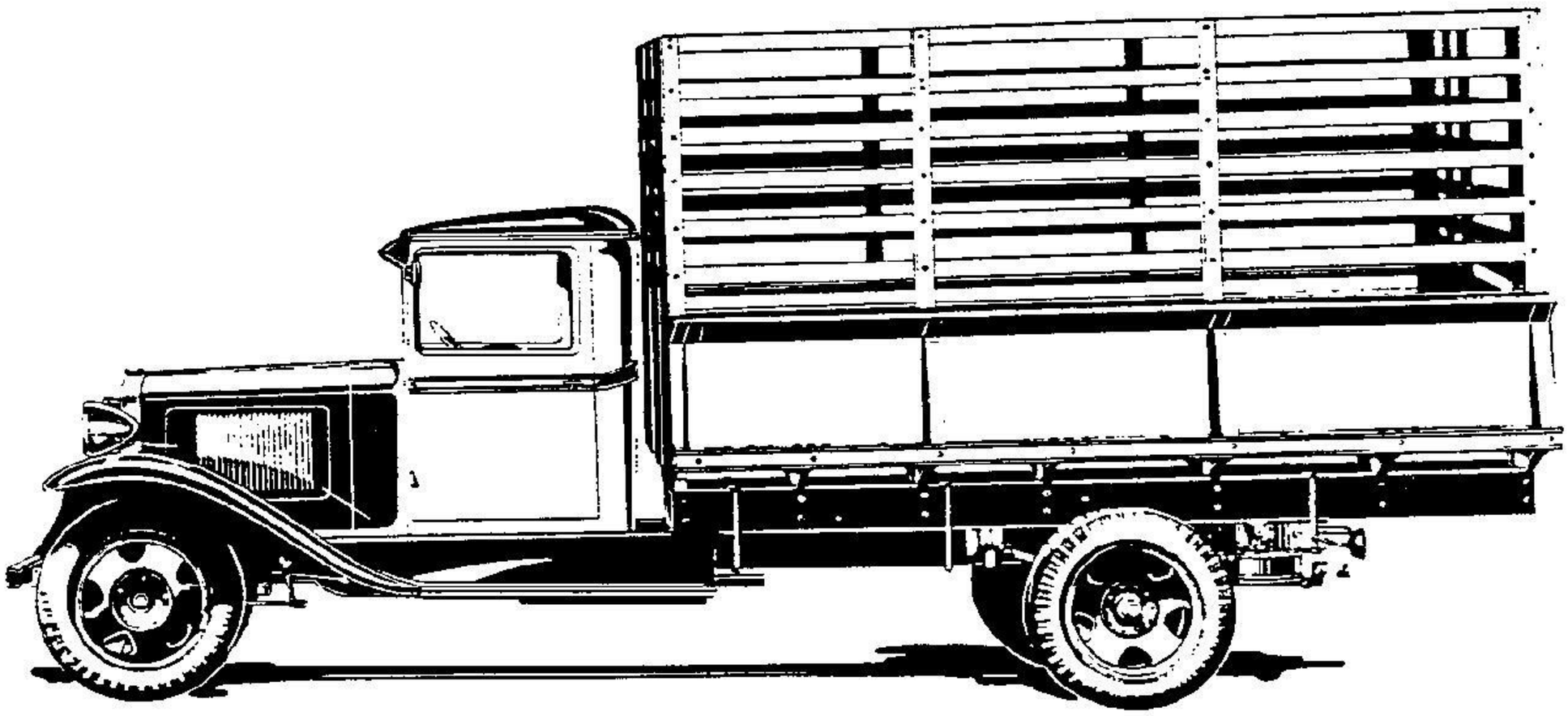

bolted to the front and rear cross sills. They can readily be added or removed as desired. Beaded angle corners assure rugged strength, and all rack bolts are countersunk to prevent injury to stock. The two-section end gate used on this body is hinged and removable.

SCHOOL BUS

The school bus is used on a modified 157 inch wheelbase dual wheeled truck. Built-in

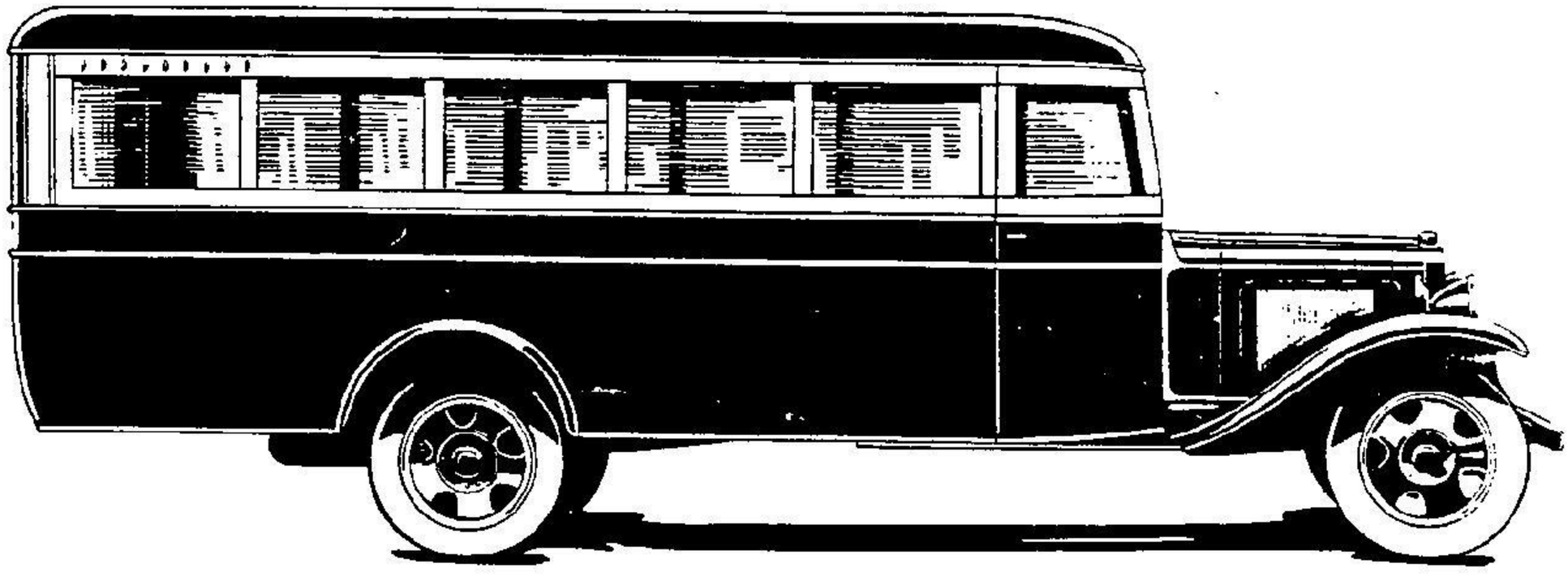

strength characterizes the body which is of strong "steel-girder" construction reinforced with hardwood to provide maximum strength. Special extensions are securely attached to the rear of the side members to provide adequate support for the long body. The tail pipe is extended to the end of the bus to protect its interior from gas fumes. The large windshield and windows provide clear driving vision and plenty of light and ventilation. Additional ventilation may be obtained thru ventilators which are above the rear side windows. A driver-controlled front door is provided on the right side for the exit and entrance of passengers. Another front door is on the left side and a large emergency door is at the rear. Seats for both driver and passengers are deeply cushioned. They may be arranged according to two optional plans to accommodate from 25 to 42 passengers.

PANEL BODIES

The roof on both panel bodies is of the "French" type, built entirely of metal except the crown where element-proof top material is retained by a thin applied moulding. The upper side panels have an embossed moulding which forms a border for advertising or identification matter which the user may wish to have painted on the side of the body. The paint finish of the entire body presents a polished appearance. The side doors are finished on the inside with attractive pressed steel panels finished with Duco.

Particular attention is given to driver comfort in the new panel bodies, and the new and improved driver's seat represents the result of considerable study and development. The structural portion of the seat consists of a heavy gauge steel stamping shaped in both horizontal and vertical planes to properly conform to the average driver's back. A pillow-type cushion attacLed to the back stamping provides the necessary resiliency. The seat cushion is deeper and has fabric "rebound snubbers". A dome light is provided in the center of the roof behind the driver. The seat is adjustable forward and backward. On the Light Delivery panel body the adjustment is made by means of a "T" handle screw similar to that used on the Coach during 1932. On the 131 inch panel body the adjustment of the seat is effected by means of bolts. The angle of the seat back is adjustable to three positions to further insure driver comfort. The right hand seat is omitted to provide additional loading space beside the driver. This is especially convenient for carrying material or packages longer than the body proper and for carrying small packages. An additional "inspector's seat" is available at extra cost.

The rear door hinges are of the "covered" type such as are commonly used on closed passenger bodies. They are arranged to include a door check, eliminating the former stop-link construction which extended into the body when the doors were closed. The rear door lock is sturdier, more positive in action and operates more easily. The bracing around the rear doors is improved and the rigidity at this opening is increased. The rear cross sill is of heavier gauge steel and considerably stiffer. The weatherstrip at the center of the rear doors is attached to the door lock pillar where it is not likely to be damaged in loading and unloading. A sponge-rubber weatherstrip is provided at the top of the doors and hinge pillars. Rubber bumpers of larger diameter and greater length provide more effective cushioning and quieter operation of the rear doors. The entire inside surfaces of the rear doors are covered with metal panels secured by wood screws for improved appearance and greater durability.

The lining panels inside the body are of heavier gauge steel and are attached to the belt rail by wood screws and to the pillars by hexagon head bolts. These improvements insure greater durability, preventing damage to the panels by sharp objects in the load. The braces at the side lock pillar are stronger. A sponge-rubber filler in the weatherstrip between the side panels and the roof insures a more perfect seal. A finishing welt is assembled between the rear fenders and the body, presenting the same neat appearance that is found on the passenger car bodies.

The windshield in both panel bodies is glazed

with shatter-proof glass.It is doubly sealed against water as weatherstrips are provided on the body around the inside of the windshield opening in addition to the weatherstrips on the windshield frame itself. This eliminates the possibility of leaks which might be caused by wind pressure, as the inner seal is not exposed to this force.

SINGLE UNIT EXPRESS BODY

The 1933 single unit express bodies for use on the Light Delivery chassis and on the short wheelbase truck chassis are also refined and improved. The shatter-proof glass windshield with the double-seal feature that is furnished on the panel bodies is used. The door trim panels and the heavier body lining panels attached with wood screws and bolts which are in the panel bodies are also features of the single unit express bodies. The seats, which are similar to those in the cab,remain unchanged except for the addition of fabric "rebound snubbers" in the cushions.

STOCK RACK BODY

The 1933 stock rack body for use on the long wheelbase truck chassis is improved by the adoption of a new rear gate to facilitate the loading of cattle. It is arranged to slide upward and also to hinge at the center to permit complete removal when desired.

SEDAN DELIVERY

The sedan delivery is a light commercial car of extremely smart appearance, developed for use in every business which demands character in its delivery service. It has all the chassis features of the light delivery line with additional operation and appearance refinements. Passenger car riding conditions are furnished by passenger car shock absorbers and the same springs used on the coach and sedan. The leaf ends of these springs are curled downward to prevent rubbing upon leaves above, thus assuring longer spring life. Rubber mats cover the running boards. The frontal appearance is enhanced by a liberal use of chrome plate on the headlamps, headlamp tie-bar, radiator shell and braces, and the passenger trumpet-type horn. The headlamp tie-bar is of the attractive double-barred type. The polished radiator grille adds to the rich appearance. A rubber cover adequately protects the horn terminals. The chrome plated tail and stop lamp, and the chrome plated tire clamp and "T" handle at the fender well also add to the smart appearance.

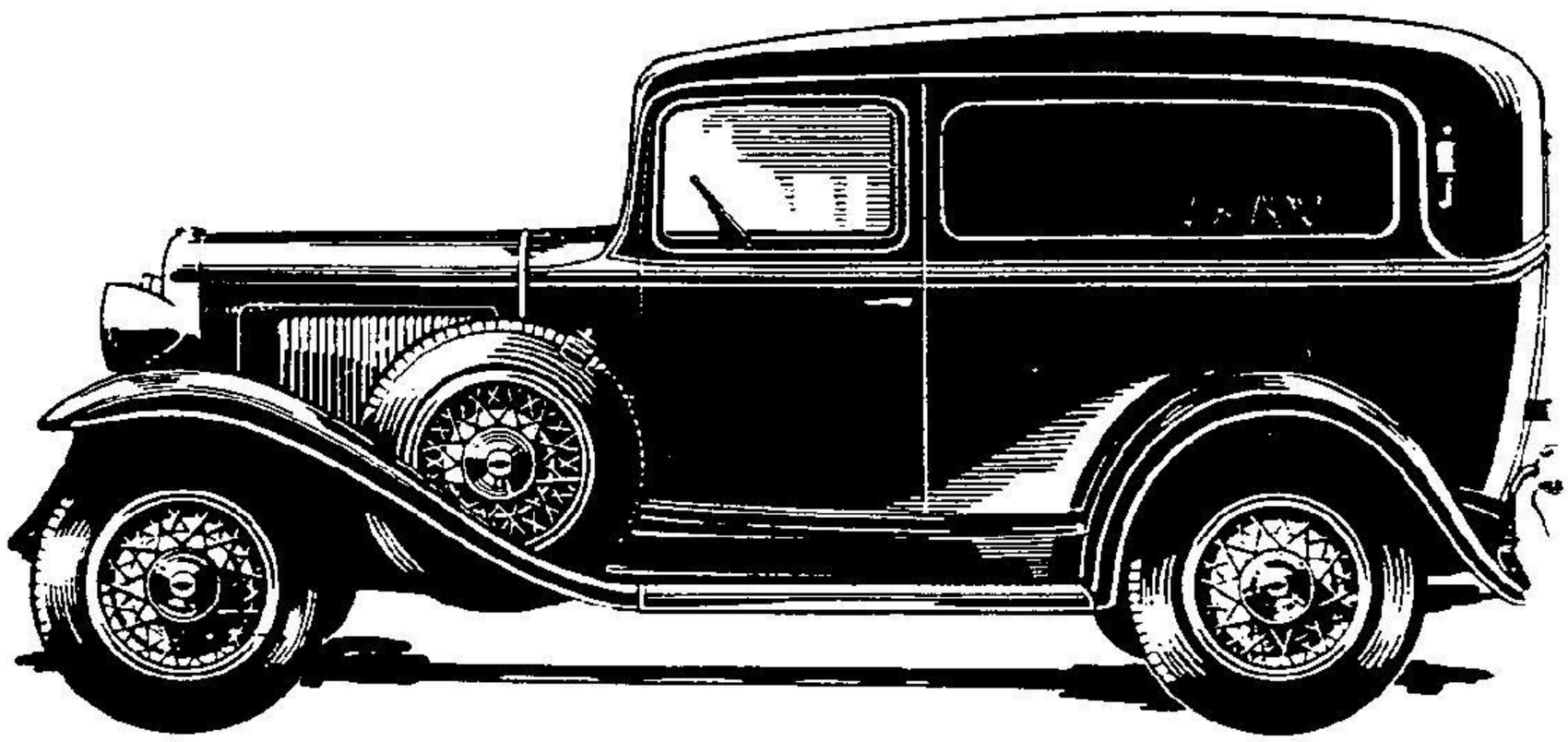

INDEX

-A-

	Page
Air Cleaner - Pass.	28-29
Axle- Front - Pass.	13
Axle- Front - Truck	75
Axle- Rear - Pass.	14-16
Axle- Rear - Truck	75

-B-

Balancer - Harmonic - Pass.	23
Bracket- Front License Tag - Pass.	48
Bodies - Pass.	56
Body Brackets - Pass.	9
Body - Farm	91
Body - Farm Rack	92
Body - Farm Tip Top	92
Body - Panel	94
Body - Single Unit Express	95
Body - Stock Rack	95
Brakes - Pass.	17-18
Brakes - Truck	79
Brake Specifications - Pass.	18
Brake Specifications - Truck	79
Bumpers - Pass.	63

-C-

Cab	91
Cabriolet	62
Carburetor - Pass.	26-28
Chart- Truck Units	72
Clamp- Oil Filler Tube - Pass.	31-32
Clutch - Pass.	38
Clutch - Truck	83
Clutch Specifications - Pass.	39
Clutch Specifications - Truck	83
Coach	59
Comparative Specs.- Bodies - Pass.	61
Comparative Specs.- Brakes - Pass.	18
Comparative Specs.- Brakes - Truck	79
Comparative Specs.- Cab	91
Comparative Specs.- Clutch - Pass.	39
Comparative Specs.- Clutch - Truck	83
Comparative Specs.- Controls - Pass.	44
Comparative Specs.- Electrical Equipment and Instruments - Pass.	52
Comparative Specs.- Electrical Equipment and Instruments - Truck	89
Comparative Specs.- Engine - Pass.	36-37
Comparative Specs.- Engine - Truck	82
Comparative Specs.- Exhaust System -Pass.	12
Comparative Specs.- Exhaust System -Truck	74
Comparative Specs.- Frame - Pass.	9
Comparative Specs.- Frame - Truck	74
Comparative Specs.- Front Axle - Pass.	13
Comparative Specs.- Front Axle - Truck	75
Comparative Specs.- Fuel System - Pass.	42
Comparative Specs.- Fuel System - Truck	86
Comparative Specs.- Over-Running Clutch - Pass.	41
Comparative Specs.- Radiator - Pass.	55
Comparative Specs.- Radiator - Truck	90
Comparative Specs.- Rear Axle - Pass.	16
Comparative Specs.- Rear Axle - Truck	77
Comparative Specs.- Sheet Metal - Pass.	48
Comparative Specs.- Sheet Metal - Truck	89
Comparative Specs.- Shock Absorbers-Pass.	13
Comparative Specs.- Springs - Pass.	12
Comparative Specs.- Springs - Truck	75
Comparative Specs.- Steering - Pass.	43
Comparative Specs.- Steering - Truck	86
Comparative Specs.- Tires - Truck	87
Comparative Specs.- Transmission - Pass.	40
Comparative Specs.- Transmission - Truck	84
Comparative Specs.- Universal Joint-Truck	85
Comparative Specs.- Wheel Carrier - Light Delivery	90
Comparative Specs.- Wheel Carrier - Pass.	55
Comparative Specs.- Wheels - Pass.	45
Connecting Rod - Pass.	23
Controls - Pass.	44
Coupe	56
Coupe 2	57
Cover - Rear Deck - Pass.	47
Cowl Lamps - Pass.	49
Crankshaft - Pass.	21-22
Cross Member- Rear - Pass.	8
Curve- Power - Truck	80
Curve- Power and Torque - Pass.	19
Curve- Spark Advance - Pass.	30
Cylinder and Crankcase - Pass.	20-21
Cylinder Head - Pass.	24-25

-E-

Eagle Radiator Cap - Pass.	64
Electrical Equipment - Pass.	49-52
Electrical Equipment - Truck	89

INDEX CONT'D.

E CONT'D.

	Page
Electrical Equipment Specs.- Pass.	52
Electrical Equipment Specs.- Truck	89
Engine - Pass.	20
Engine - Truck	61
Engine Mountings - Pass.	33-35
Engine Specifications - Pass.	36-37
Engine Specifications - Truck	82
Engine Underpans - Pass.	48
Exhaust System - Pass.	10-11
Exhaust System - Truck	74
Exhaust System Specs.- Pass.	12
Exhaust System Specs.- Truck	74

-F-

Fan - Pass.	33
Farm Body	91
Farm Rack Body	92
Farm Tip Top Body	92
Features- List of - Light Delivery	67
Features- List of - Pass.	3-5
Features- List of - Truck	69
Fender Mounting - Pass.	45
Fender Tire Wells - Pass.	64
Fenders - Front - Pass.	45-46
Fenders - Rear - Pass.	47
Frame - Pass.	6-7
Frame - Truck	73
Frame Specs.- Pass.	9
Frame Specs.- Truck	74
Front Axle - Pass.	13
Front Axle - Truck	75
Front Axle Specs.- Pass.	13
Front Axle Specs.- Truck	75
Front Fenders - Pass.	45-46
Front License Tag Bracket - Pass.	46
Fuel System - Pass.	42
Fuel System - Truck	85
Fuel System Specs.- Pass.	42
Fuel System Specs.- Truck	86

-G-

Gauge- Oil Lever - Pass.	32

-H-

Hangers- Step - Pass.	8
Harmonic Balancer - Pass.	23
Headlamps - Pass.	49
Hood - Pass.	47-48
Horn - Pass.	50

-I-

Ignition Lock - Pass.	50-51
Instruments - Pass.	51-52
Instruments - Truck	89
Instrument Specs.- Pass.	52
Instrument Specs.- Truck	89
Intake Silencer - Pass.	28-29
Introduction - Pass.	2
Introduction - Truck	66

-L-

Lamps- Cowl - Pass.	49
Lamps- Tail and Stop - Pass.	49-50
License Tag Frame - Pass.	64
Lighter- Cigarette - Pass.	64
List of Features- Light Delivery	67
List of Features- Passenger	3-5
List of Features- Truck	69
Lock- Ignition - Pass.	50-51

-M-

Manifolds - Pass.	26-28
Metal Tire Cover - Pass.	63
Metal Tire Cover Plate - Pass.	63
Mounting- Fender - Pass.	45
Mounting- Pedal- Pass.	43
Mountings- Engine - Pass.	33-35

-N-

Non-Glare Shield - Pass.	64

-O-

Octane Selector - Pass.	31
Oil Filler Tube Clamp - Pass.	31-32
Oil Level Gauge - Pass.	32
Oil Pan - Pass.	31
Oil Pump - Pass.	31
Over-Running Clutch- Pass.	40-41

-P-

Panel Body	94

INDEX CONT'D.

P CONT'D.

	Page
Pedal Mounting - Pass.	43
Phaeton	60
Piston - Pass.	23-24
Power Curve - Pass.	19
Power Curve - Truck	80
Pump- Oil - Pass.	31
Pump- Water - Pass.	32

-R-

Radiator - Pass.	53
Radiator - Truck	90
Radiator Core - Pass.	54
Radiator Specs.- Pass.	55
Radiator Specs.- Truck	90
Radiator Splash Guard - Pass.	46
Radio - Pass.	63
Rear Axle - Pass.	14-16
Rear Axle - Truck	75
Rear Axle Specs.- Pass.	16
Rear Axle Specs.- Truck	77
Rear Cross Member- Pass.	8
Rear Deck Cover - Pass.	47
Rear Fender- Pass.	47
Roadster	62
Rubber Tire Cover - Pass.	63
Running Boards - Pass.	46

-S-

School Bus	93
Sedan	61
Sedan Delivery	95
Selector- Octane - Pass.	31
Sheet Metal - Pass.	45
Sheet Metal - Truck	87
Sheet Metal Specs.- Pass.	48
Sheet Metal Specs.- Truck	89
Shock Absorbers - Pass.	13
Shock Absorber Specs.- Pass.	13
Single Unit Express Body	95
Spark Advance Curve - Pass.	30
Special Equipment - Pass.	63
Splash Guard- Radiator - Pass.	46
Spring Covers - Pass.	64
Springs - Pass.	12
Springs - Truck	74
Spring Specs.- Pass.	12

S CONT'D.

Spring Specs.- Truck	75
Stabilized Fender Mounting - Pass.	45
Steering - Pass.	42
Steering - Truck	86
Steering Specs.- Pass.	43
Steering Specs.- Truck	86
Step Hangers - Pass.	8
Stock Rack Body	95
Stop Lamp - Pass.	49-50
Stop Lamp Wiring - Pass.	50
Sub-Frame Support - Pass.	8
Sun Visor - Pass.	64
Support- Transmission - Pass.	8

-T-

Tail Lamp - Pass.	49-50
Tire Cover-Metal - Pass.	63
Tire Cover-Rubber - Pass.	63
Tires - Truck	86
Torque Curve - Pass.	19
Transmission - Pass.	39-40
Transmission - Truck	84
Transmission Specs.- Pass.	40
Transmission Specs.- Truck	84
Transmission Support - Pass.	8
Trunk Rack - Pass.	63

-U-

Underpans - Engine - Pass.	48
Universal Joint - Truck	85
Universal Joint Specs.- Truck	85

-V-

Vacuum Spark Control - Pass.	29-31

-W-

Water Pump - Pass.	32
Wheel Carrier - Light Delivery	90
Wheel Carrier - Pass.	55
Wheels - Pass.	44-45
Wheels - Truck	86
Wheel Specs.- Pass.	45
Windshield Defroster - Pass.	64
Wiring- Stop Lamp - Pass.	50

Chevrolet Engineering Center
Library

PLEASE RETURN TO
TECHNICAL INTELLIGENCE
FILE
CHEVROLET
ENGINEERING DEPARTMENT
DATA GROUP

STANDARD CHEVROLET 1933 ENGINEERING INFORMATION

