INSTRUCTION BOOK

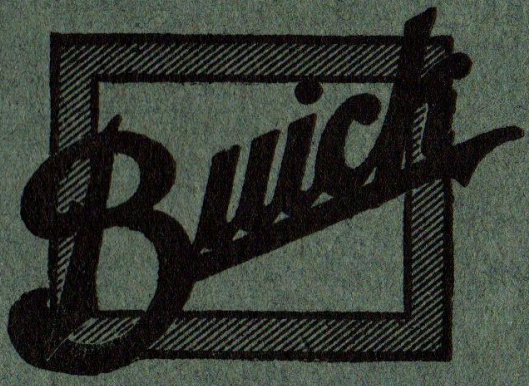

MODELS
D-SIX-44 and D-SIX-45

INSTITUTO
BOLÍVAR

INSTRUCTION BOOK

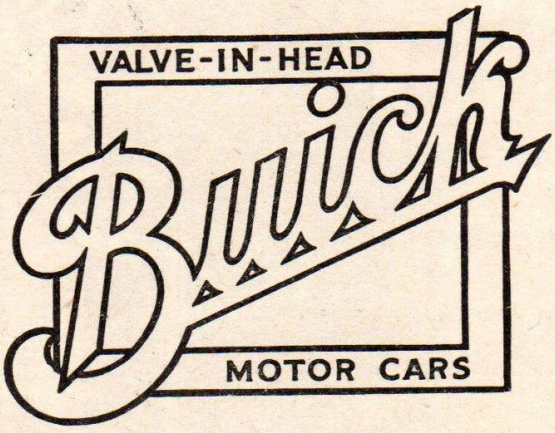

MODELS

D-6-44 D-6-45
D-6-46 D-6-47

BUICK MOTOR COMPANY
FLINT, MICHIGAN, U. S. A.

FLINT PRINTING COMPANY, FLINT, MICH.

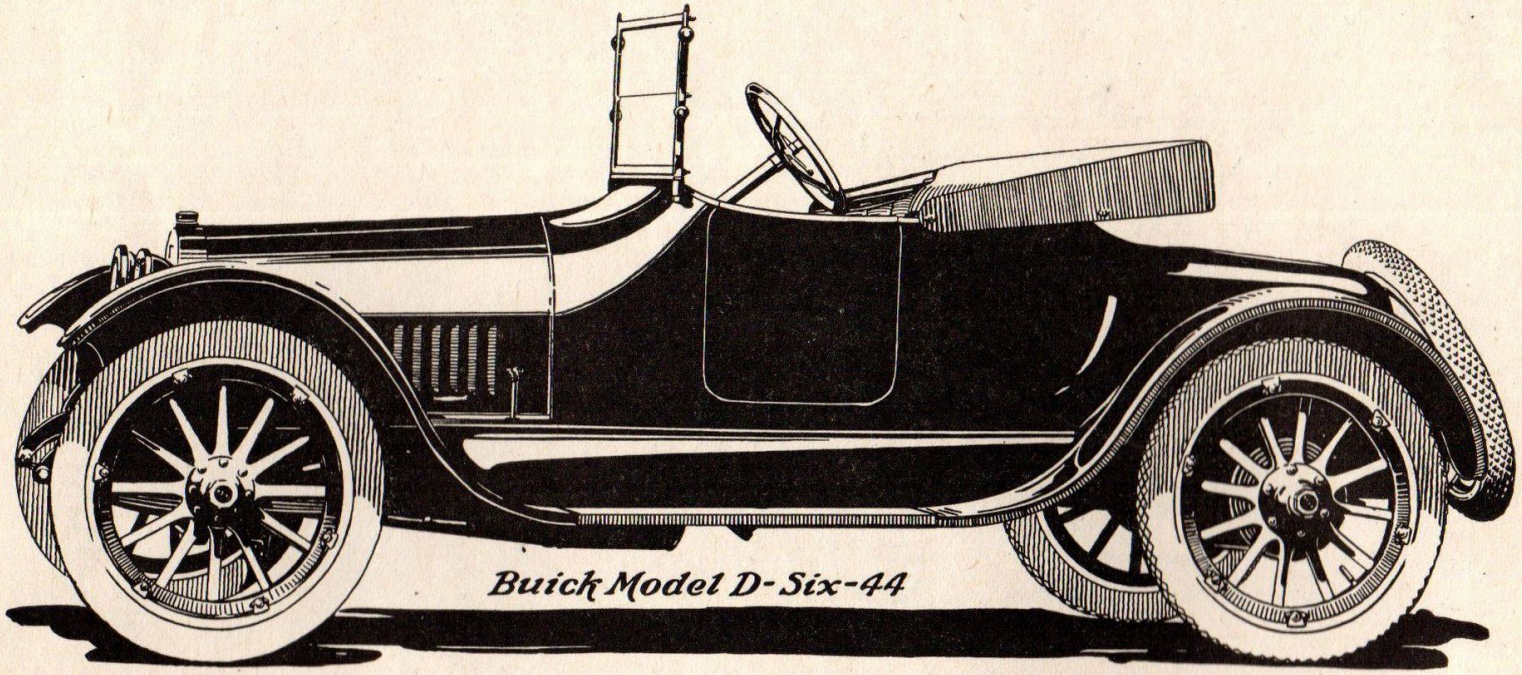

Buick Model D-Six-44

INTRODUCTION

Like any other fine piece of machinery, an automobile requires a certain amount of regular attention, in regard to lubrication and adjustment, to keep it operating at its highest efficiency. The information in this book is intended to familiarize the owner or driver with the mechanical details of his car, so that he can give it this attention when necessary, but in case of an accident requiring repairs or replacements, it is expected that the owner will call on the nearest Buick dealer or service station for expert attention.

Repair parts or any additional information may be obtained from the nearest Buick dealer or from any of the Buick Branches and Distributors listed on page five. In all correspondence concerning the car be sure to give Model and Serial Number. The Model will be found stamped on a plate fastened to upper toe board. The Serial Number is stamped on a small oval plate on front end of frame.

BUICK MOTOR COMPANY

Flint, Michigan, U. S. A.
January 1, 1917

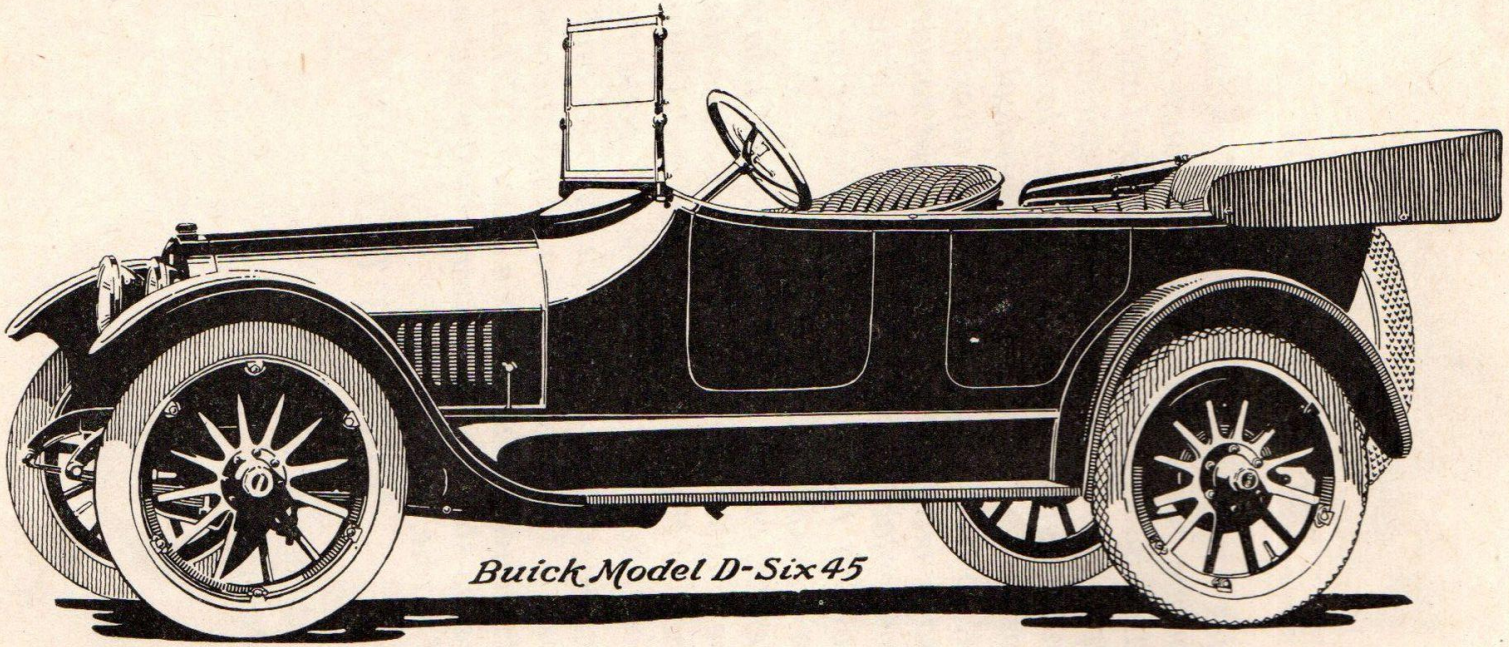

Buick Model D-Six 45

BUICK BRANCHES AND DISTRIBUTORS

Atlanta_____Buick Motor Company, 241-243 Peachtree Street
Battle Creek_____Buick Motor Company, 84 West Main Street
Boise, Idaho_____Randall-Dodd Auto Company, 119-1123 Main St.
Boston_____Noyes-Buick Co., 15 Lawton Street
Buenos Ayre, Argentine Republic,G.M.Ex.Co.,Calle Cabildo 1002-1098
Buffalo_____Buick Motor Company, 1094-1100 Main Street
Charlotte, N. C._____C. C. Coddington, 532 West Trade Street
Chicago_____Buick Motor Company, 2031 Calumet Avenue
Cincinnati_____Leyman-Buick Company, 630-634 Walnut Street
Cleveland__The Ohio-Buick Company, Buick Bldg., 19th, near Euclid
Dallas_____Buick Automobile Company, 1420-24 Young Street
Denver_____MacFarland Auto Company, 25 Colfax Avenue
Detroit_____Buick Motor Company, 750 Woodward Avenue
Indianapolis_____Buick Motor Company, 363-365 N. Illinois Street
Kansas City, Mo.__Buick Motor Co., Admiral Blvd. and McGee Street
Lake Charles, La._____Calcasieu Motor Co., 210 W. Broad Street
Lincoln, Neb.___Nebraska-Buick Auto Company, 13th and P Streets
Little Rock, Ark.__Arkansas-Buick Auto Co., 200-4 Louisiana Street
London, England_____General Motors (Europe) Ltd., 136 Longacre
Los Angeles_____Howard Auto Company, Olive and Tenth Streets
Louisville, Ky_____Leyman Motor Co., Brook Street and Broadway
Madison, Wis.___Hokanson Automobile Co., 16-20 East Doty Street
Milwaukee_____Buick Motor Company, 156-160 Wisconsin Street
Minneapolis_Pence Automobile Company, 800-804 Hennepin Avenue
New Orleans_____Jos. Schwartz Co., Ltd., 544-550 Barrone St.
New York City_____Buick Motor Co., 55th Street and Broadway
New York City__General Motors Export Company, No. 11 Broadway
Oklahoma City_Buick Motor Co. of Oklahoma, 504-506 N. Broadway
Omaha_____Nebraska-Buick Auto Company, 1912-1916 Farnum St.
Philadelphia_____Buick Motor Company, Broad and Poplar Streets
Pittsburgh__Buick Motor Company, Baum Street and Euclid Avenue
Portland, Ore._____Howard Auto Company, 14th and Davis Street
Rochester, N. Y._____C. L. Whiting, 342 East Avenue
Saginaw_____Garber-Buick Company, 204-6 N. Washington Avenue
St. Louis, Mo.__Vesper-Buick Auto Company, 3205-3207 Locust St.
Salt Lake City_____Randall-Dodd Auto Co., 53 West 4th South
San Antonio, Texas__Buick Auto Company, Avenue C and Travis St.
San Francisco_____Howard Auto Company, Van Ness at California
Seattle, Wash._____Northwest-Buick Co., 802 East Pike Street
Shreveport, La._____Bernstein Brothers, 1322-1328 Texas Ave.
Sioux City _____Nebraska-Buick Co., 313-315 Douglas Street
Sydney, Australia__General Motors Export Co., No. 350 Kent Street
Washington, D. C._Buick Motor Co., 1028 Connecticut Avenue, N. W.

DEALERS EVERYWHERE

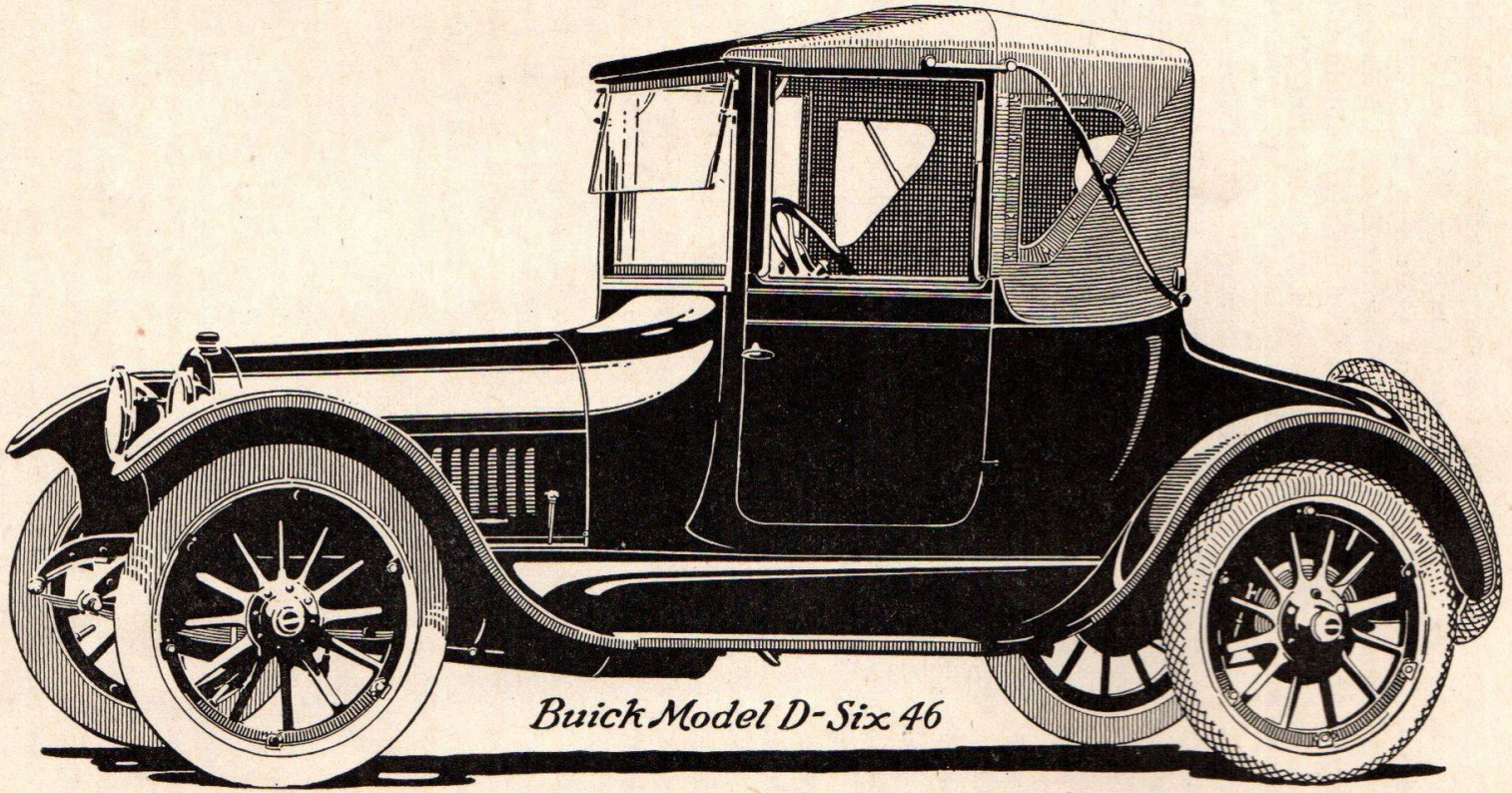

Buick Model D-Six 46

LICENSE APPLICATIONS

In those states or territories requiring license under a power rating, the following information will be necessary:

Model—(See plate on upper toe board.)

Serial Number—(See oval plate on front end of frame.)

Motor number—(See number stamped on left side of crank case near front breather tube.)

Number of cylinders—Six.

Diameter of bore—3.250 inches.

Stroke—4.50 inches.

S. A. E. or N. A. C. C. horsepower rating—25.3 horsepower.

Shipping weight—D-44 Roadster, 2660 pounds.
D-45 Touring Car, 2740 pounds.
D-46 Cabriolet 2780 pounds.
D-47 Sedan 3000 pounds.

GUARANTEE

The automobiles furnished by the Buick Motor Company are warranted to be free from defects in material and workmanship under normal use and service, our obligation under this guarantee being limited to making good at our factory any part or parts thereof, which shall within twelve months after delivery to the original purchaser, be returned to us with transportation charges prepaid, and which our examination shall disclose to our satisfaction to have been thus defective; this guarantee being expressly in lieu of all other guarantees expressed or implied, and of all other obligations or liabilities on the part of the Buick Motor Company, and we neither assume, nor authorize any person to assume for us any liability in connection with the sale of Buick automobiles.

This guarantee shall not apply to any Buick automobiles, which shall have been repaired or altered outside of our factory in any way so as, in our judgment, to affect their stability or reliability, nor which have been subject to misuse, negligence or accident.

The Buick Motor Company makes no guarantee whatever in respect to tires, rims, ignition apparatus, horns or other signalling devices, starting devices, batteries, speedometers or other trade accessories, inasmuch as they are usually guaranteed separately by their respective manufacturers.

The Buick Motor Company reserves the right to make changes in design or add any improvements on Buick cars at any time without incurring any obligations to install same on cars previously purchased.

BUICK MOTOR COMPANY.

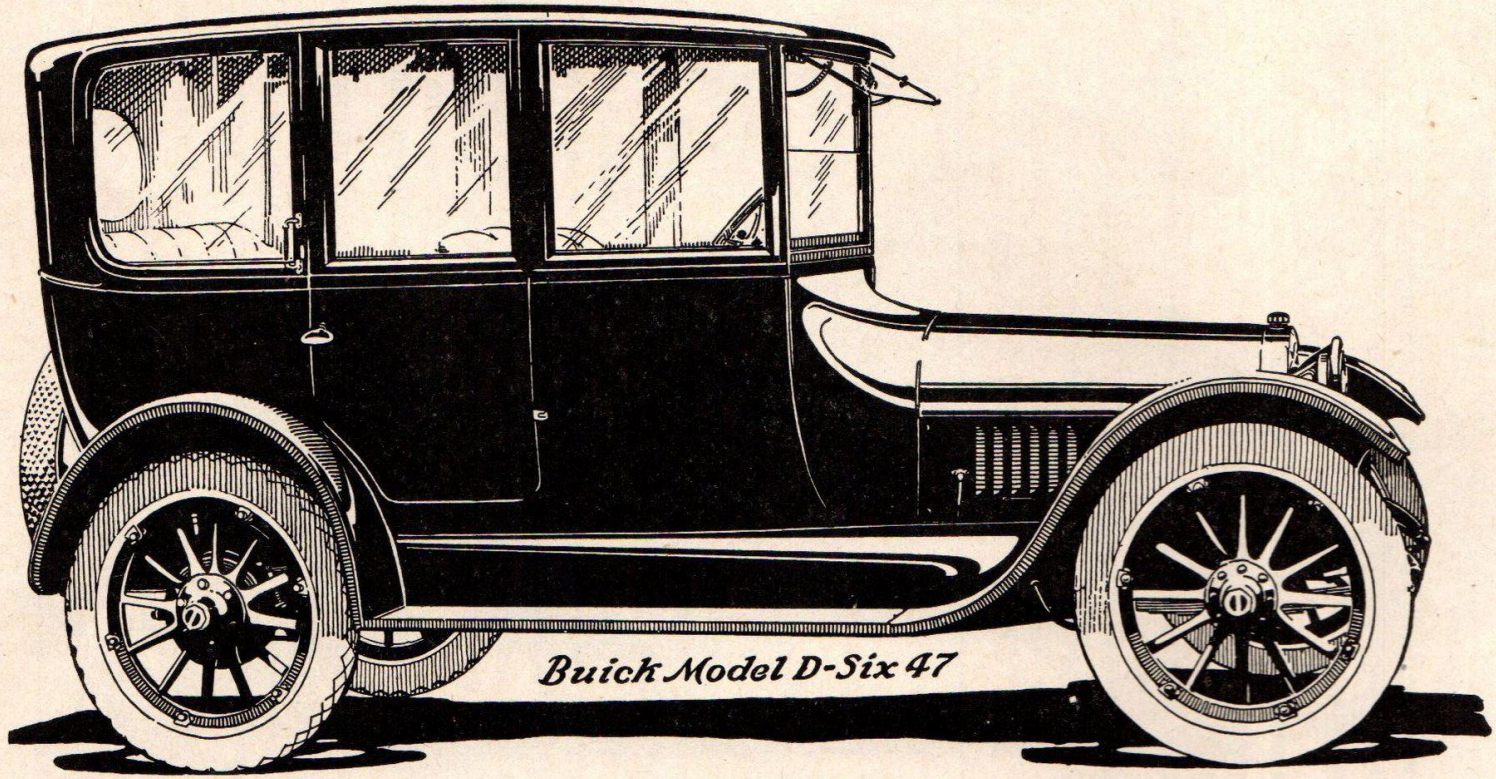

Buick Model D-Six 47

OPERATION

Before attempting to drive the car, make sure it is ready for the road. See that there is gasoline in the tank at the rear; that the radiator is filled to the level of the overflow with clean water, or with an anti-freezing mixture in winter, that the motor crank case is filled with oil to the level of the petcock; that the storage battery is properly connected; that the gasoline shut-off cock between the vacuum tank and the carburetor is fully open; and that the car is provided with a driving license. If the car has been standing idle for several days, it may also be necessary to prime the vacuum tank by removing the pipe plug in the cover and introducing a pint or so of gasoline. Be sure to screw the plug in tight when replacing it.

TO START THE MOTOR

See that the ball-topped control lever stands in neutral position, where it is free to move sideways. Set spark and throttle levers on the steering wheel about one-third of the way down the sector. Unlock the switch and pull on the button marked "IGN" (Ignition). Turn air regulator to "choke" position, hold clutch pedal out with left foot and press the starting pedal.

Pressing the starting pedal sets the electric starter in motion and meshes the gears on its shaft with the teeth in the fly wheel to crank the motor.

If the motor does not start within thirty seconds, release the starting pedal, examine all controls to see that they are properly set, and try again. In winter, when the motor is very cold, it will require more cranking, but in ordinary weather the motor should start on the first few turns.

Never hold the starting pedal down for any length of time without stopping to examine the position of the switch, levers, etc., as failure to start is generally an indication that something is wrong and a prompt investigation should be made.

RUNNING POSITIONS

As soon as the motor starts, turn air regulator to "Hot" position; close throttle and advance spark until motor runs slowly and evenly. The automatic spark advance will now take care of the spark position for all ordinary driving. The foot accelerator can be used to control the speed of the motor. As the motor warms up, the air regulator can be adjusted between the "hot" and "cold" positions to obtain even running at all speeds.

Never allow the motor to run any length of time with the air regulator turned to "choke," as this gives an excessively rich mixture and uses an abnormal amount of gasoline.

HAND CRANKING

If the storage battery should be run down or the starter out of order, the motor may be started by hand cranking. To crank by hand set switch and air regulator as before. Bring throttle lever one-third of the way down on sector and move spark lever slightly away from topmost position. Remove cap from starting crank below radiator and attach hand crank. Push in on crank until starting clutch is engaged, and turn motor over by pulling up sharply on the crank.

Never try to start a motor by pushing down on the starting crank as a back-fire is likely to result in a broken arm.

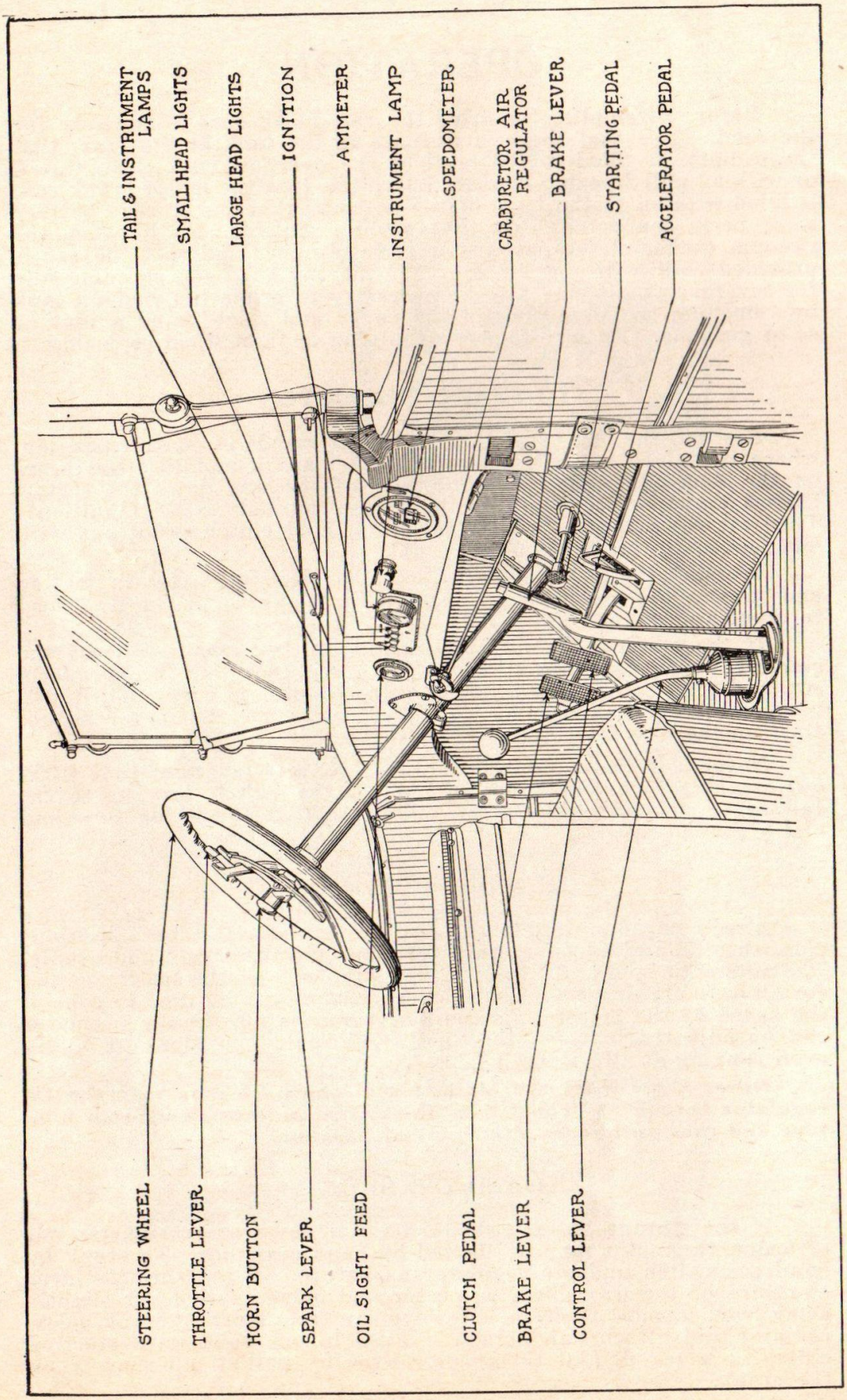

Plate 1
Driving Compartment

TO START THE CAR

To start the car, select a quiet street or level road which has but little traffic. With the motor running slowly and evenly, take position in seat behind steering wheel, grasping the wheel firmly with the left hand. With the right hand, release the emergency brake lever, by pressing the thumb button on top, and push it as far forward as it will go. Place the left foot on the clutch pedal, and press down firmly, holding it in this position, with the right hand, shift the ball-topped control lever first to the right, then back.

LOW SPEED

The gearset is now in the first, or "low speed" position. Gently release the pressure of the left foot on clutch pedal and at the same time press down lightly on the accelerator pedal with the right foot to increase the speed of motor. As the clutch takes hold, the car will commence to move forward. Continue to press down on the accelerator pedal until the car gains some headway before attempting to change to second speed.

SECOND SPEED

When the car is well under way, disengage the clutch, at the same time releasing the pressure on the accelerator pedal to prevent the motor racing, and with the right hand shift the ball-topped control lever forward and to the left, then forward again. Engage the clutch immediately and accelerate the motor as before. The car is now in second or intermediate speed.

HIGH SPEED

Again accelerate the motor until the car is moving forward at a rapid pace; operate clutch and accelerator pedals as before; quickly shift the control lever straight back as far as it will go. The car is now in high speed which is the normal driving position.

SHIFTING GEARS

In shifting from a lower to a higher gear, as in getting under way, it is important that the speed of the car be accelerated just before making the change, so that the two gears that are to be meshed together will be running at approximately the same speed. The proper handling of the clutch pedal and accelerator so as to make the motor "pick up" its load quickly, and at the same time prevent it from "racing" when the clutch is released, requires considerable practice.

In changing gears, and especially when starting the car from a standstill, always let the clutch pedal come back gently. If the foot is suddenly removed from the pedal it will let the clutch take hold with a violent jerk.

In shifting gears from one speed to another, the motion should be made firmly and without hesitation. If the gears fail to mesh correctly the first time, release the pressure on the control lever and clutch pedal for a moment and try again. With a little practice the various changes can be made easily and without noise.

SHIFTING DOWN

Shifting from a higher to lower gear, or "shifting down" is accomplished in the same way as shifting up: that is by releasing the clutch, moving the control lever quickly to the proper position, and engaging the clutch. It will be found much easier to shift gears from higher to lower speeds if clutch pedal is pressed down only

enough to release clutch. When pressed clear down, the clutch brake is applied, making it difficult to mesh the gears.

DRIVING

Ordinarily the car is always driven in high or third speed and first and second speeds are used only for starting. Occasionally, however, a steep hill, muddy or sandy road will be encountered which requires more power, and since it is for this purpose that the lower speeds are provided, the driver should not hesitate to use them.

The Buick will climb any hill "on high" that any car can climb, but after the driver has demonstrated this to his satisfaction, it is suggested that he make use of a lower gear which will not cause so great a strain on his motor.

STEERING

Steering is largely a matter of practice. Drive slowly at first. Do not attempt to turn corners too sharply or too quickly. Always slow down or stop before crossing railroad and car tracks. In a short time a driver gets the "feel" of his car, and then steering becomes almost an involuntary action; so that all the attention can be concentrated on the road. Learn to watch the road from 100 to 300 feet ahead of the car, depending on the speed. In this way there is always time to prepare for obstacles before the car reaches them.

HANDLING THE SPARK

For all ordinary driving, the automatic spark advance, which is incorporated in the ignition system, will control the spark position without further attention on the part of the driver. It is arranged to automatically advance or retard the spark to the proper position, depending on the speed of the motor, but as the car slows down, as in ascending a steep hill or negotiating a heavy road, it is necessary to retard the spark by hand until the motor runs smoothly and without knocking.

Never allow the motor to run for any length of time with the spark retarded, as such practice only consumes an abnormal amount of gasoline and has a tendency to overheat the motor.

TO STOP THE CAR

To stop the car, slow down the motor by removing the pressure on the accelerator pedal, then release the clutch, by pressing on the clutch pedal with the left foot. If the car retains too much headway apply the service brake by pressing the brake pedal with the right foot. Shift the control lever into neutral position. The foot may now be removed from the clutch pedal.

TO REVERSE

To reverse the motion of the car, or drive backwards, first come to a full stop. Release clutch and shift control lever to the right and forward. Engage clutch and accelerate motor as before.

Never attempt to reverse the motion of the car before it has come to a complete stop. The car cannot move in two directions at once and the result is certain to be serious if this is attempted.

EMERGENCY STOPS

If for any reason it should become necessary to stop the car suddenly, press both pedals and at the same time pull back on the emergency brake lever with the right hand. The car should not be stopped suddenly except in an emergency as such stopping is extremely hard on the tires and strains the entire mechanism. A good

rule is to use brakes and clutch as little as possible and endeavor to control the car with the accelerator.

TO STOP THE MOTOR

To stop the motor push in the ignition switch button and at the same time open the hand throttle to the starting position. This will allow the motor to take in a full charge of gas before coming to rest and leave it ready for a quick start next time; also move the spark lever back to the starting position and set the emergency brake before leaving the car. If the car is left for any length of time, turn the lock on the ignition switch.

Never leave the car with the motor running, as this is a useless waste of gasoline and there is always a chance that children or others may throw the transmission gears into mesh.

COASTING

When descending a long grade it is both permissible and proper to use the motor as a brake. To do so, push ignition switch button in, and open throttle wide. This allows the motor to obtain large charges which are not ignited, but the work of compressing them in the cylinders helps check the speed of the car.

STARTING ON A GRADE

It sometimes becomes necessary to start the car on an up grade. To accomplish this, start motor as before, then release emergency brake and hold car with service brake while shifting gears. Now accelerate motor with the hand throttle while gradually releasing pressure on both pedals together. It takes considerable practice in operating the clutch and brake pedals to make the one take hold while releasing the other without "stalling" the motor, but it can be done very easily with a little experience.

SKIDDING

Sudden application of the brakes, especially when turning a corner or on slippery pavement, is liable to make the car "skid." Skidding is caused by the rear wheels suddenly losing their traction while the car is subject to centrifugal force from turning. The result is that the rear end swings suddenly toward the outside of the curve. The best way to avoid skidding is to drive slowly. When a skid occurs, release the brake for an instant and turn steering wheel in the direction the car is sliding.

RACING THE MOTOR

Never open the throttle suddenly or leave it open very far when the car is standing and the motor running idle. This is known as racing the motor, and there is nothing more injurious especially when the motor is cold. More motors have been ruined by racing while idle than have ever been worn out in actual driving under load.

SPEEDING

Drive slowly at first. Extremely high speeds are dangerous under all conditions and fifteen or twenty miles an hour on good roads is fast enough for the inexperienced driver. Learn to handle the car properly under all conditions of roads and traffic before attempting higher speeds.

RULES OF THE ROAD

The following "rules of the road" apply to the entire United

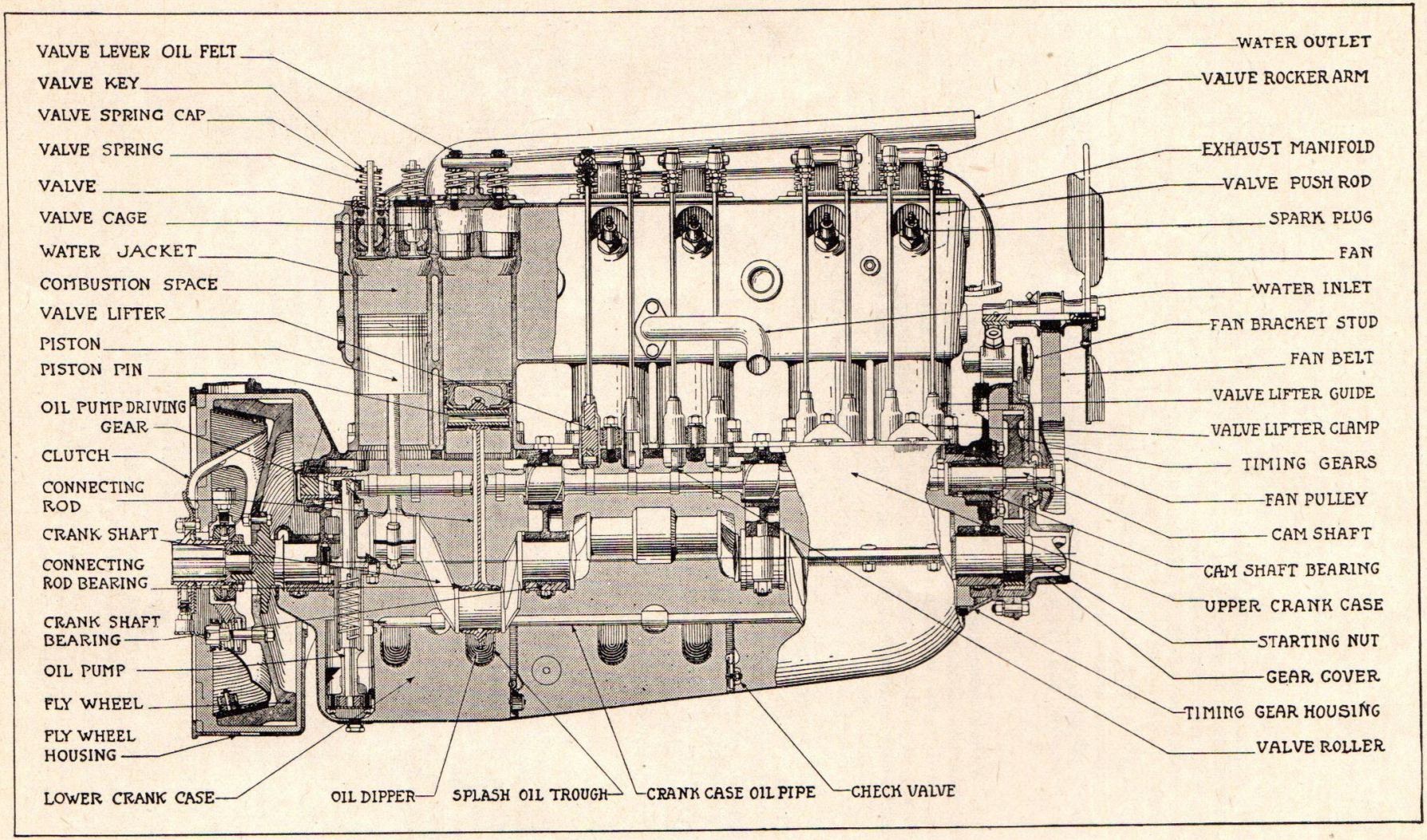

Plate 2
Interior Construction of Motor

States, and the greater part of Canada. Every driver of a motor car should understand and obey them:

1. When meeting a vehicle going in the opposite direction, turn out to the right.

2. When passing a vehicle going in the same direction, turn out to the left.

3. In turning a corner to the right, keep as close as possible to the right hand ditch or curb.

4. In turning a corner to the left, continue past the intersection of the two roads or streets before making the turn.

5. In stopping the car always stop with the right hand side of the car at the right hand curb.

USE OF LIGHTS

Buick cars are provided with electric lights operated from the switch on the instrument board. For night driving on country roads, both head and tail lights should be turned on by pulling out the proper switch buttons. For city driving and when leaving the car standing at the curb, the large headlight bulbs should be turned off and the small bulbs turned on. Do not leave the car standing at the curb for any length of time with the large headlights burning as they require considerable current, and will eventually run the storage battery down. A small electric lamp is also provided on the instrument board to illuminate the instruments at night.

WATCH THE INSTRUMENTS

Instruments placed conveniently on the instrument board keep the driver constantly informed as to the operation of his car, and he should form a habit of glancing at these instruments occasionally while driving.

The oil sight glass tells, by the motion of its wheel, when sufficient oil is being circulated through the motor lubricating system.

The ammeter on the switch shows the amount of current, in excess of that being used for lights and ignition, going to the storage battery. It also shows the amount taken from battery when cranking or idling the motor.

The speedometer gives the speed of the car and the number of miles traveled, both total and trip. The trip register may be set beck to zero or to any given figure by turning the large milled screw at the right.

TO RAISE THE TOP

In case of rain, or as a protection from the sun, the top may be raised as follows: Remove dust cover and pull up on lever which fastens the bows to the top holders on the rear of the body. Next pull up and ahead on the front bow until the top is fully extended. Fasten in this position by attaching to windshield posts in front. The top can be raised most easily from inside the car.

The side curtains are carried in the top and can be attached by unrolling and stretching between the fasteners on the top bows and body.

When folding the top, be sure that the side curtains are properly rolled and folded up first, and that the folds of the top do not get caught between the bow spacers. Do not fold top when wet or damp.

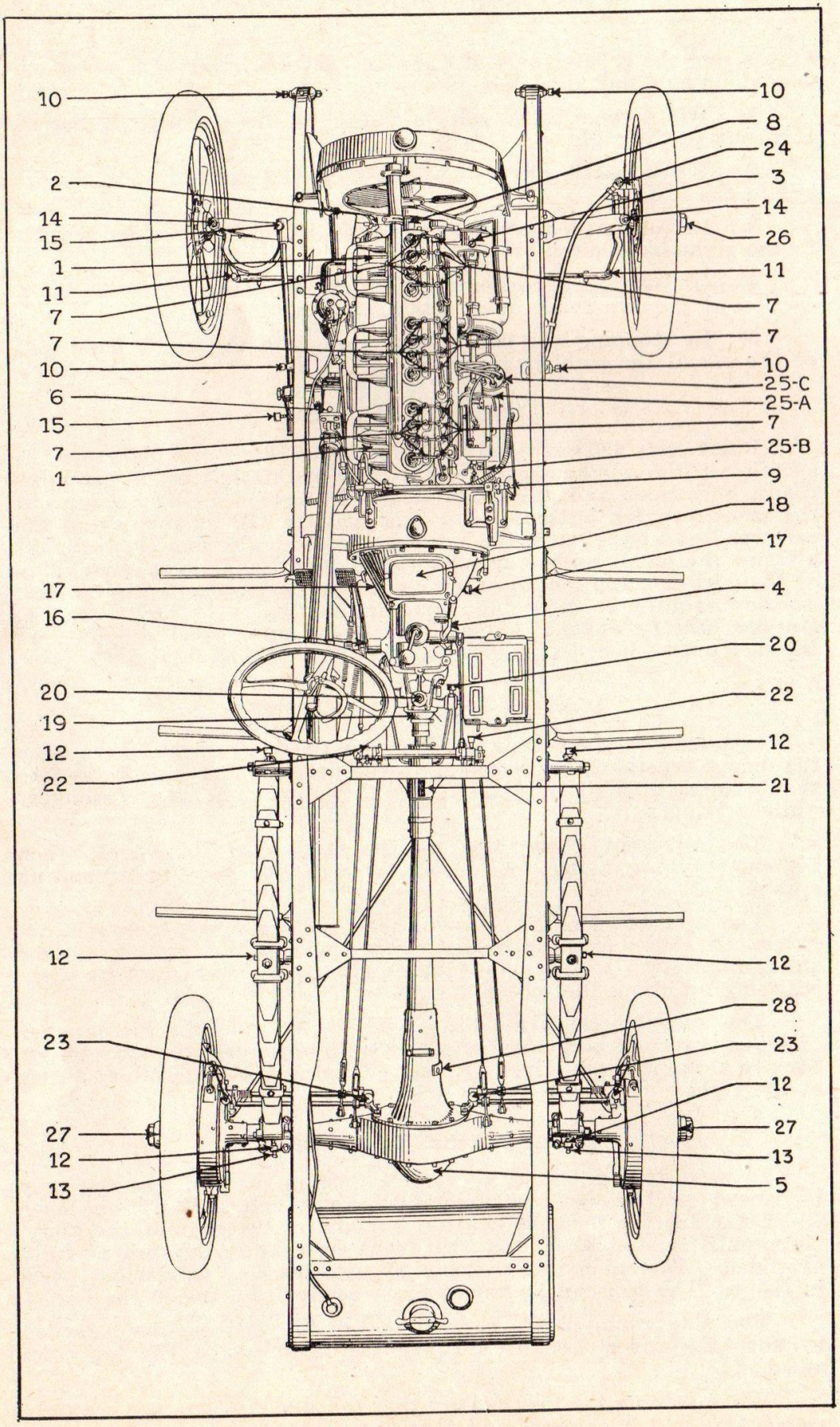

Plate 3
Lubrication Chart

LUBRICATION

1. **MOTOR—Motor oil.** Fill crank case reservoir through forward breather tube on left hand side to level of petcock. Be sure petcock is not stopped up when testing. Use long funnel found in tool equipment and do not fill above petcock level as an excess will only cause the motor to smoke. The oil sight feed on the instrument board shows circulation of oil but does not tell when the supply is running low. Test occasionally.

2. **TIMING GEARS—Steam cylinder oil.** Fill through wing plug on left side of timing gear case to within one inch of the level of the opening.

3. **PUMP SHAFT BEARING—Motor oil.** Add one or two ounces at frequent intervals, but do not try to fill full, or the oil will overflow into the timing gear case.

4. **TRANSMISSION—Steam cylinder oil.** Remove filler cap on right side of transmission and fill to level of the opening.

5. **REAR AXLE—Steam cylinder oil.** Remove plug in differential housing cover and fill to level of the opening.

6. **STEERING GEAR—Steam cylinder oil.** Remove pipe plug in housing cap and fill to level of the opening.

EVERY 100 MILES

7. **VALVE ROCKER ARMS—Motor oil.** Squirt a few drops of oil in the oil holes. There are two oil holes in each rocker arm.

8. **FAN HUB—Motor oil.** Remove plug in hub and inject a small amount of oil. Be sure and replace plug securely.

9. **STARTER SLIDING GEARS—Soft cup grease.** Give grease cup half a turn. Keep filled with grease.

10. **FRONT SPRINGS—Soft cup grease.** Give grease cups half a turn. Keep filled with grease. There is one cup at the front end and two at the rear end of each spring.

11. **TIE ROD BOLTS—Soft cup grease.** Give grease cups half a turn. Keep filled with grease. There is one cup at each end of the tie rod.

12. **REAR SPRING—Soft cup grease.** Give grease cups on spring shackles, spring blocks, and ends of springs, half a turn each. Keep filled with grease. There are four cups to each spring.

EVERY 500 MILES

13. **REAR SPRING SEAT—Motor oil.** Lift cap of oil cup and fill full allowing felt in oil pocket to become thoroughly saturated.

14. **KING BOLTS—Motor oil.** Turn cap on oil cup until holes line up, fill full of oil and give cap half turn. Oil is fed automatically through a wire wick to the bolt.

15. **STEERING CONNECTING ROD—Soft cup grease.** Give grease cups a turn or two. There is one cup at each end of the rod.

16. **BRAKE AND CLUTCH PEDALS—Soft cup grease.** Remove floor board and give grease cups one or two turns. There is one cup on each pedal hub.

17. **CLUTCH RELEASE SHAFT—Soft cup grease.** Give grease cups one or two turns. There is one cup at each end of shaft.

18. **CLUTCH—Soft cup grease.** Remove clutch cover. Give grease cup on clutch release ring one or two turns. Release clutch and turn cone around until grease cup appears. Give it one or

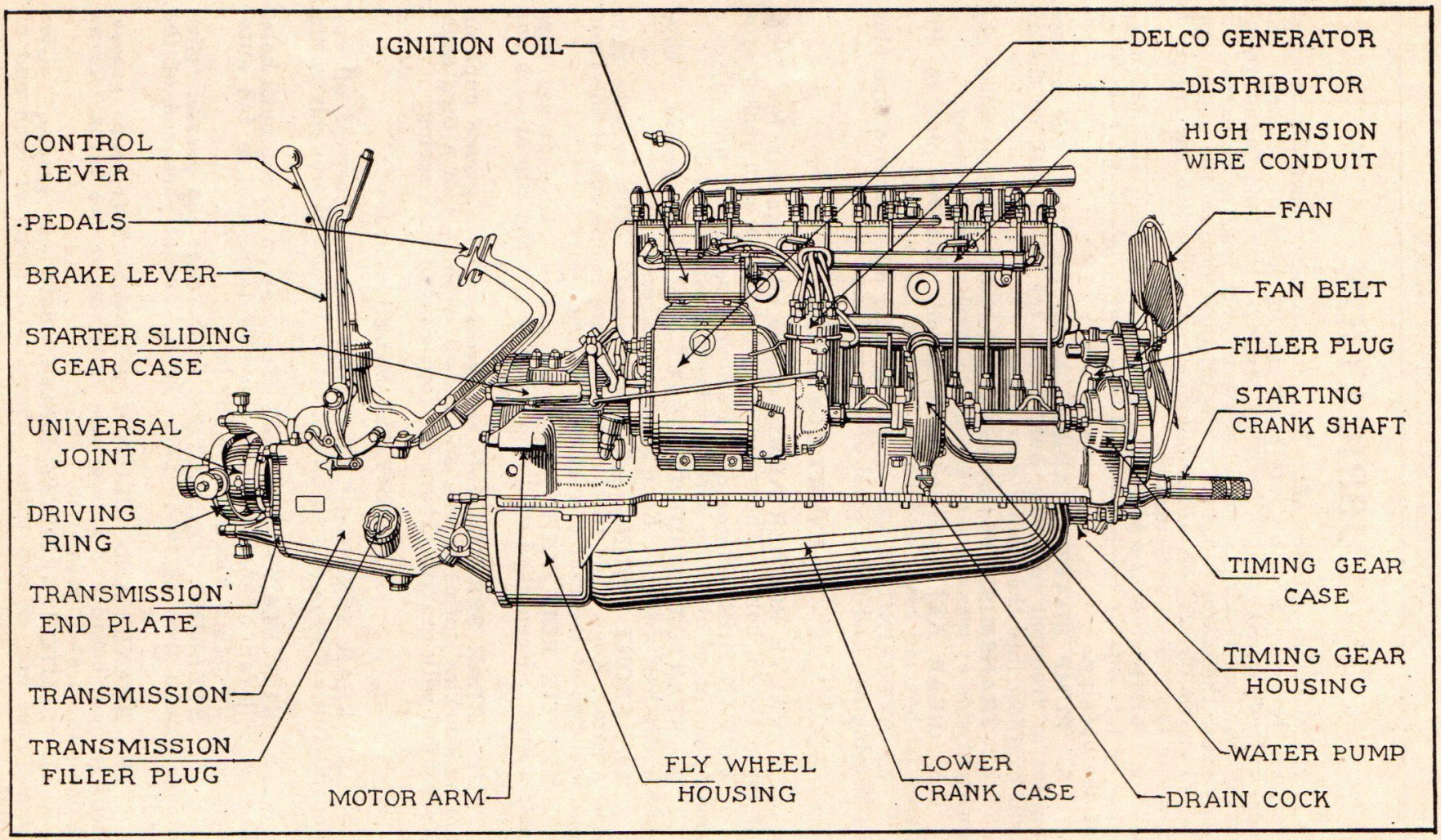

Plate 4
Generator Side of Power Plant

two turns. Turn motor over by hand or with starter until grease cup on clutch spider appears. Give cup one or two turns. Apply a few drops of motor oil to the clutch release yoke trunnion bearings. There are three grease cups on the clutch.

Be sure that no grease or oil gets on the fly wheel or clutch leather.

19. **UNIVERSAL JOINT—Steam cylinder oil.** Move car forward or backward until pipe plug in joint comes opposite the offset in the driving ring, then remove plug and inject oil with grease gun. Be sure that plug is put back securely.

20. **DRIVING RING BEARING—Soft cup grease.** Give each cup one or two turns. There are 4 cups, 2 on ring and 2 on driving yoke caps.

21. **DRIVING YOKE—Motor oil.** Pour oil in opening on top of yoke allowing waste in oil pocket to become thoroughly saturated.

22. **BRAKE SHAFT—Soft cup grease.** Give grease cups one or two turns. There is one cup at each end of the shaft.

23. **BRAKE CAM SHAFTS—Soft cup grease.** Give grease cups one or two turns. There are 4 cups, 2 at inner ends, and 2 at outer ends of the shafts.

24. **SPEEDOMETER SWIVEL JOINT—Soft cup grease.** Give grease cup on joint one or two turns and keep filled with grease.

25. **DELCO GENERATOR—**

A. Soft cup grease. Swing cover on front end of distributor housing near shaft, to one side and inject grease with grease gun, for lubrication of distributor gears, generator clutch, and forward armature bearing.

B. Motor oil. Turn oiler in rear end of generator until hole is open, and inject motor oil for lubrication of rear armature bearing.

C. Motor oil. Swing cover on distributor cup and inject a few drops of motor oil for lubrication of upper distributor shaft bearing.

EVERY 1000 MILES

26. **FRONT WHEELS—Soft cup grease.** Remove hub caps by unscrewing them to the left. Unscrew spindle nuts by turning nut on right hand spindle to left and nut on left hand spindle to right. Do not get nuts mixed. Pack balls and hub with soft cup grease. Replace wheels and tighten nuts until wheels have no perceptible shake on spindles, but will spin freely, and stop with tire valves down.

27. **REAR WHEELS—Soft cup grease.** Move or jack up car and turn wheels until pipe plugs in hubs appear on top. Remove plugs, fill hubs with soft cup grease, and replace plugs securely.

28. **PINION SHAFT BEARING—Soft cup grease.** Remove adjusting cover on pinion flange and fill with soft cup grease gun.

OVERHAULING

Three or four times a year all the oil should be drained out of motor, transmission and rear axle, and these parts washed out thoroughly with gasoline or kerosene. Generally it pays to change the oil in the motor every 500 or 1000 miles, or whenever it gets thin and watery. Do not use too much oil. Enough is just right and any more will simply run out of the bearings and collect dust and dirt on other parts of the car.

At least once a year the car should receive a thorough overhauling at which time the motor, clutch transmission, universal

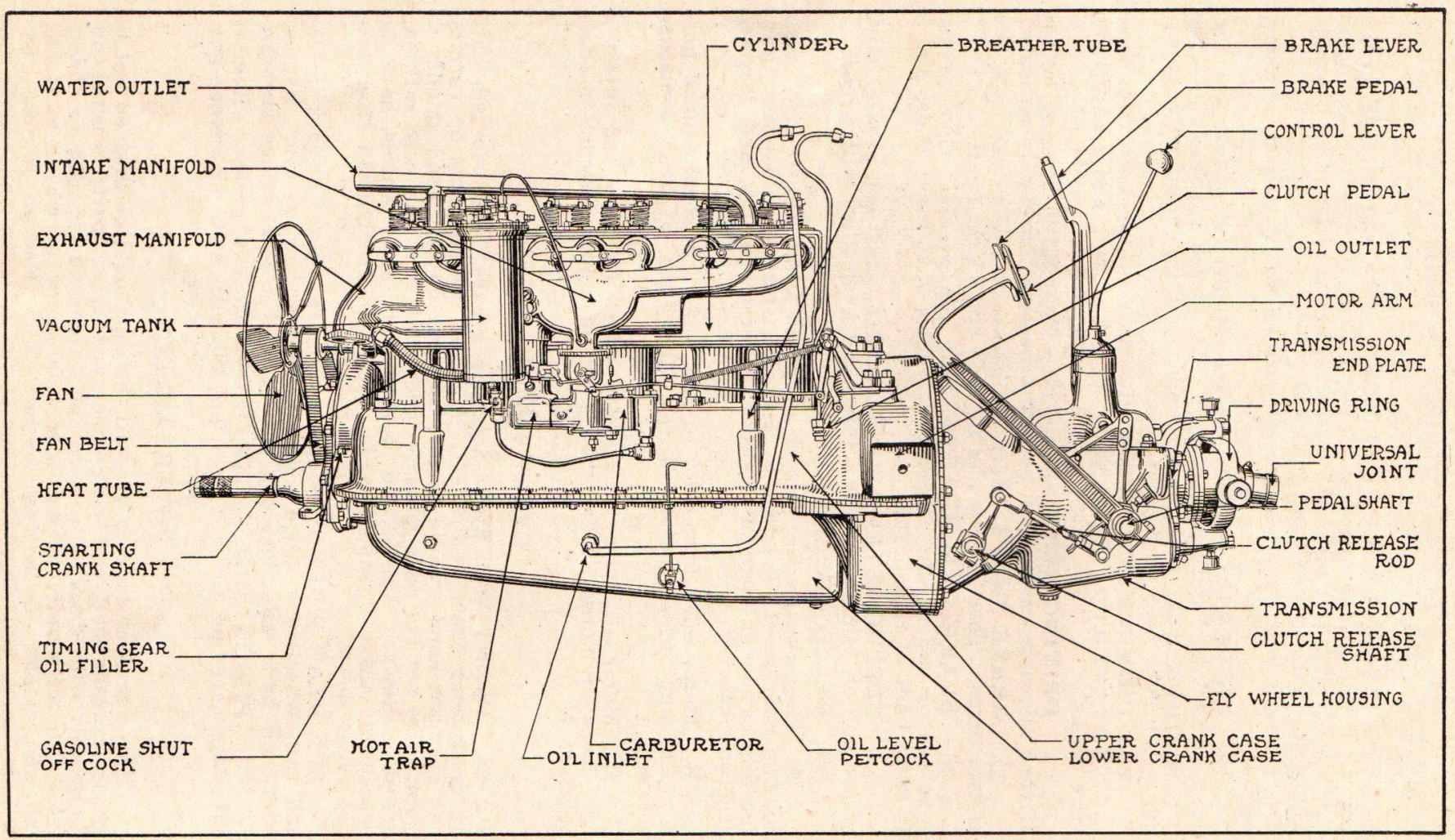

Plate 5
Carburetor Side of Power Plant

joint, steering gear, and axle should be taken apart and carefully cleaned and adjusted before being reassembled. This work should be done by an experienced mechanic.

LUBRICANTS

Motor oil should be a high grade, medium, heavy, mineral oil, with a flash point of not less than 400 degrees Fahrenheit and a viscocity of 80 to 90 Tagliabue or 62 to 72 Saybolt, at 212 degrees Fahrenheit. This oil should be used exclusively in the motor lubricating system, for valve rocker arms, distributor and generator bearings, spring seats, king bolts, driving yoke and for all small joints not otherwise provided with lubrication, such as spark and throttle rods, brake rods, etc.

Steam cylinder oil should be a heavy mineral oil, free from acid, and should be used exclusively for the motor timing gears, transmission gears, differential gears and steering gear. It is better for this purpose than most of the so-called "gear greases."

Soft cup grease or vaseline should be a pure mineral product of a soft nature and should be used in all other grease cups, such as those on the tie rod bolts, starter sliding gear, clutch release shaft, brake shaft, brake cam shafts, driving yoke caps and ring, and in the unversal joint, steering connecting rod and wheel hubs.

POWER PLANT

The unit power plant is the most important part of the car. It develops the necessary power for driving the car and delivers it to the axle and road wheels where it is finally converted into motion of the vehicle.

The power plant consists of:

The motor.
The lubricating system.
The fuel system.
The Delco system.
The cooling system.
The exhaust system.
The clutch
The transmission gearset.
The universal joint.

The motor is the machine which turns the pressure of the exploding gas into rotary motion of the crankshaft.

The lubricating system supplies oil for the different parts of the motor automatically varying the amount to agree with the speed of the motor.

The fuel system pumps the raw gasoline from the fuel tank at the rear of the car, vaporizes it, mixes it with proper proportion of air and delivers it to the motor cylinders in quantities proportional to the load.

The Delco system generates the electric current, increases its voltage sufficiently to enable it to jump the spark gaps, and distributes it to the cylinders in proper rotation. It also supplies the electrical energy which is accumulated in the storage battery to crank or "spin" the motor for starting, and to operate the electric lights.

The cooling system protects the working parts of the motor by absorbing the excess heat of the explosions and diffusing it to the surrounding atmosphere.

The exhaust system carries the waste products of combustion away from the motor and muffles the noise of the explosions.

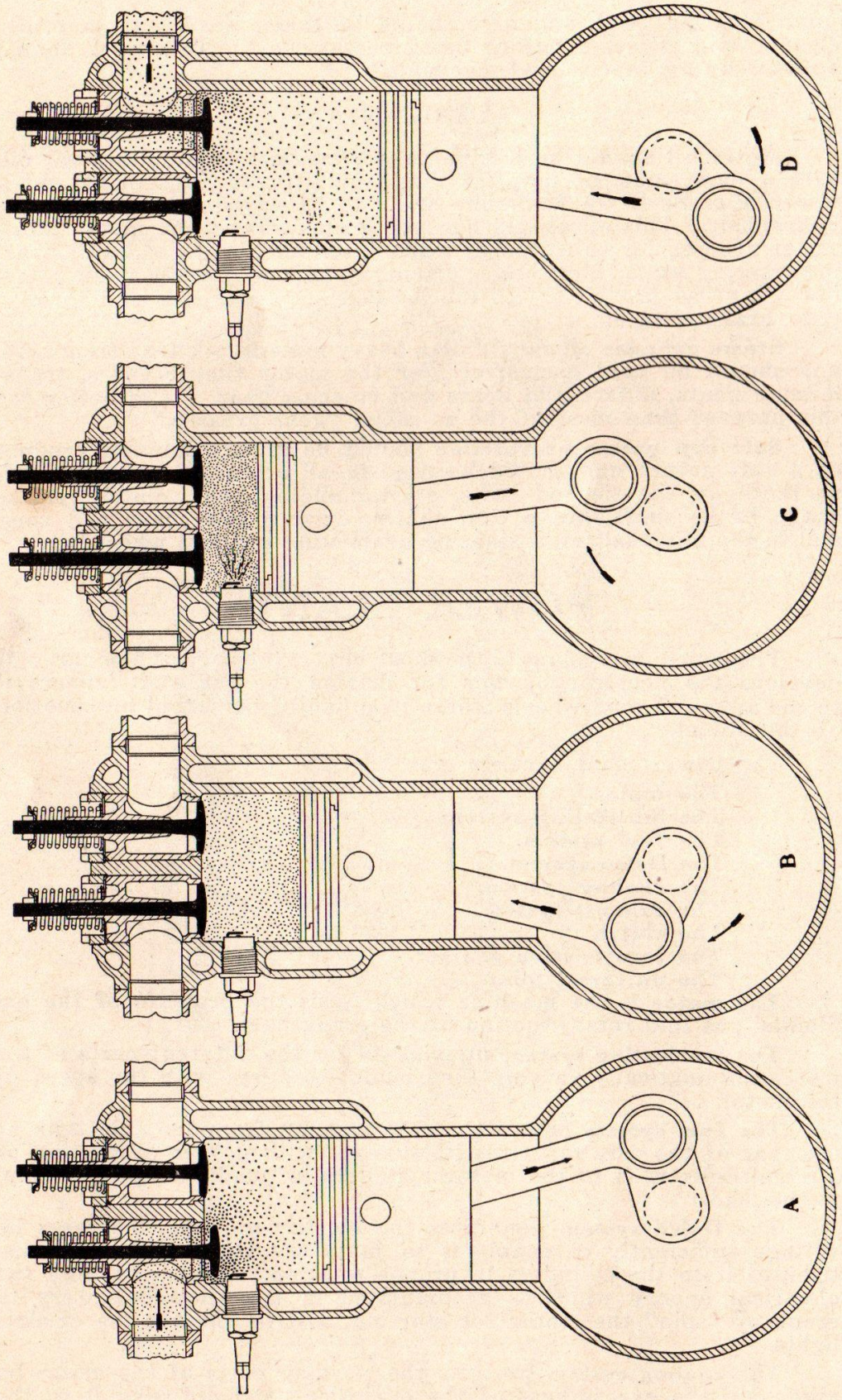

Plate 6
Cycle Diagram

The clutch is the connecting link between the motor and the transmission, and connects or disconnects the two units at the will of the operator.

The transmission gearset allows the speed of the motor to be varied in relation to the speed of the rear wheels, so that the energy can be applied at a faster rate under certain conditions.

The universal joint is the flexible coupling which connects the power plant to the rear axle and allows the axle to move up and down over the road surface without interrupting the driving effort.

MOTOR

The motor consists essentially of a row of six cylinders in which the gas is exploded, the force of the explosions acting on pistons which move up and down in the cylinders. The pistons are connected by means of the connecting rods with the crankshaft, and as they move up and down turn the crankshaft around in a clockwise direction. At its rear end the crankshaft carries a heavy fly wheel which engages with the clutch and transmits the power on to the rear wheels. Teeth are cut around the rim of the fly wheel and a small gear, driven by the electric starter, engages with these teeth when spinning the crank shaft to start the motor. The crank case, which is fastened to the frame of the car, supports the cylinders and encloses the crank shaft and its bearings.

At their upper ends, the cylinders have two openings, closed by poppet valves. One of these communicates with the exhaust system and the other with the intake manifold and carburetor. The valves are opened and closed at the proper intervals in the cycle by rocker arms and push rods, actuated by the cam shaft, which is geared to the crank shaft and runs at one-half the crank shaft speed, so that the valves are each opened and closed once for every two revolutions of the crankshaft. At its rear end the cam shaft carries another gear which drives the oil pump located in the lower half of the crank case.

Spark plugs project into the combustion space at the upper ends of the cylinders and serve to ignite the gas when a cylinder is ready for the explosion.

A double wall or water jacket entirely surrounds the upper part of the cylinders and water is kept constantly circulating through the space between the two walls by means of the water pump, which is attached to the right side of the crank case and is driven by another shaft geared to the cam shaft. The pump shaft runs 1½ times as fast as the crank shaft and also drives the Delco generator through a coupling at its rear end.

HOW THE MOTOR WORKS

The power of the motor is produced by burning or exploding charges of gas in the cylinders, above the pistons, the resulting pressure forcing the pistons down and turning the crank shaft. In the four cycle motor, of which the Buick engine is an example, it takes four strokes of the piston or two complete revolutions of the crank shaft, for each explosion or working stroke in any one cylinder. This will be more readily understood by reference to the diagram.

As the piston starts down on the first stroke of the cycle, as in "A," the inlet valve is opened. The motion of the piston tends to create a vacuum in the cylinder, and this sucks in a charge of fresh gas from the carburetor, through the valve opening.

When the piston has reached the bottom of its stroke, and starts back, as in "B," the intake valve closes and the piston compresses the gas it has sucked in, into the space at the top of the cylinder.

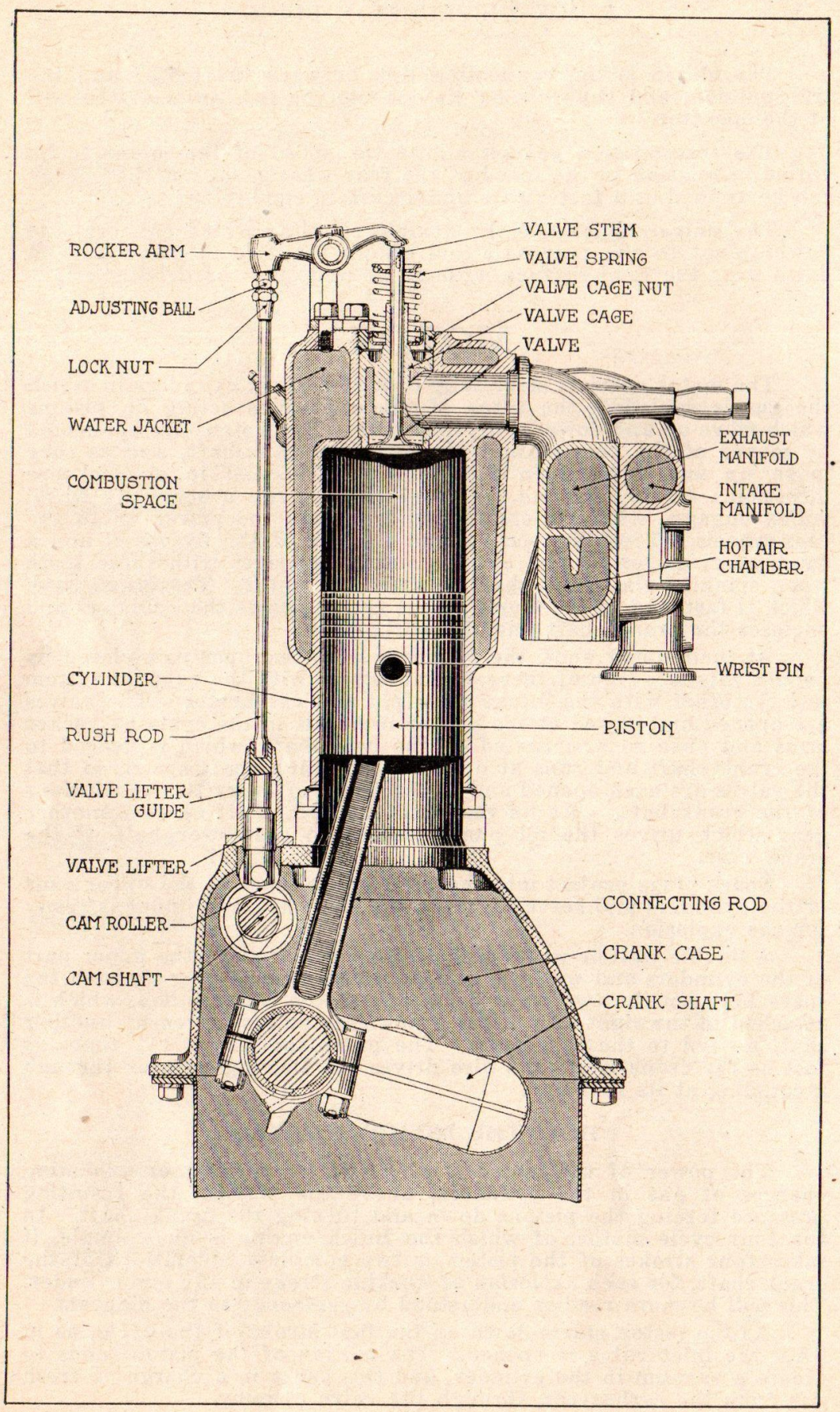

Plate 7

Buick Valve Mechanism

As the piston reaches the end of its upward stroke, as in "C," the compressed gas is ignited by an electric spark which occurs at the points of the spark plug, and the resultant explosion creates a large amount of heat and pressure, which pushes the piston down during the next, or working stroke, and turns the crank shaft.

On the return upward stroke of the piston, "D," the exhaust valve is opened, and the piston pushes the remaining burnt gas out through the exhaust pipe, leaving the cylinder empty and ready for the beginning of a new cycle.

It will be noticed from the above that only one stroke out of the four is a working stroke in any one cylinder, but as the motor has six cylinders, the crank shaft actually receives three impulses every revolution.

TIMING THE VALVES

The exact point in the cycle at which the valves are opened and closed is determined by the shape of the cams which operate them and by the angular relation between the cam shaft and crank shaft. If it should ever become necessary to remove one of these shafts or the gears which drive them, they must be replaced in proper relation to one another or the valves will be "out of time." To obtain this relation, the punch-marked tooth on the crank shaft gear should be set to match with the punch-marked space on the cam shaft gear.

ADJUSTING PUSH RODS

With the timing gears properly matched, the final setting of the valves can be made by adjusting the push rods to proper length by means of the adjusting ball ends and lock nuts. In making this adjustment turn the motor by hand, in clockwise direction until line marked "1 and 6" on the fly wheel comes into line with line on the rim of the inspection hole. This is the firing position for cylinders No. 1 and No. 6, numbering from the radiator back, and one or the other of these cylinders will be found to have both valves closed, so that both rocker arms will have a slight amount of play. The push rods for these rocker arms should then be adjusted so as to have .005 inch clearance between the end of the valve stem and the rocker arm. This is approximately the thickness of a sheet of heavy paper or very light card, and is sufficient to allow for the expansion of the valve stem when the motor gets warm. Push rods for the other cylinders may be adjusted in the same manner.

One-half teaspoonful of kerosene inserted on valve stem at least once a week while motor is running will keep valve free from carbon and prevent it from sticking in valve cage.

In setting the marks on the fly wheel be careful to turn the motor only in clockwise direction, otherwise the backlash in the timing gears will affect the result.

GRINDING VALVES

To keep the motor up to its maximum efficiency, the valves must be gas tight when closed. When leakage occurs the valves should be ground as follows: Compress valve spring and lift push rod out of socket in valve lifter. Loosen valve cage nuts with the special drift furnished in tool kit and remove by unscrewing. A light tap with a hammer on the end of the valve stem will loosen cage so it may be withdrawn. Be careful not to injure the small bronze packing ring on top. Remove valve spring and after cleaning with gasoline or kerosene, smear the valve and its seat with fine emery flour and oil, or with one of the valve grinding pastes now on the market. Grind, by turning valve back and forth on its seat

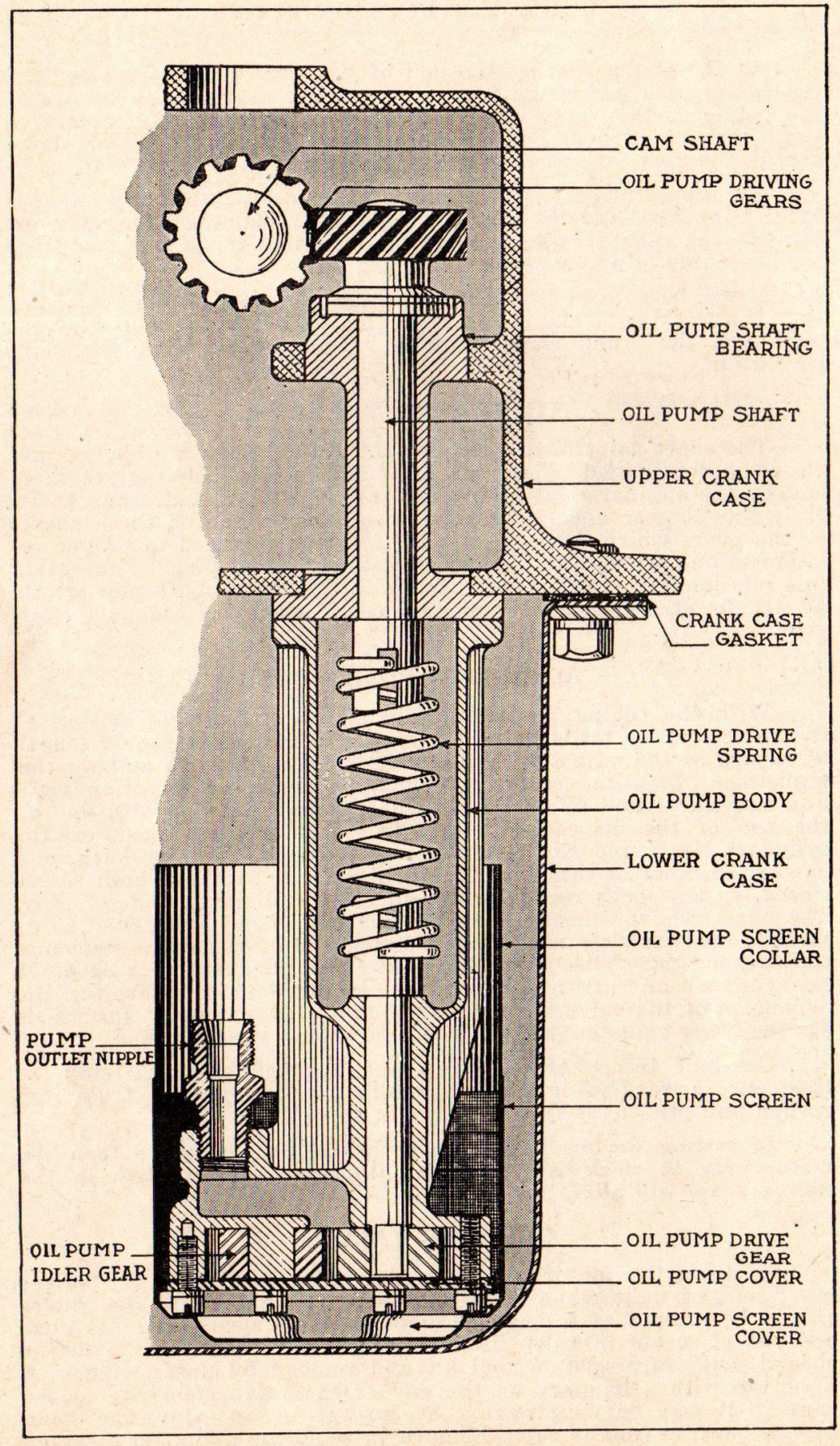

Plate 8

Oil Pump and Shaft

until both valve and seat show a bright ring 1/32 inch wide all the way around.

Be careful to clean out all traces of abrasive material before replacing valve.

After grinding valves, it will usually be found necessary to readjust the push rods to compensate for the wear.

REMOVING CARBON

Too much lubricating oil or too rich a mixture will form carbon in the cylinder. An excessive deposit of carbon sometimes becomes incandescent and ignites the charges before the piston has finished its compression stroke, resulting in a knock in the motor.

The carbon deposits in compression chamber may be burned out with an oxy-acetylene torch, or it can be scraped off with a bent scraper through the valve cage holes. Care should be taken to see that none of the carbon dust gets into the valves or cages.

ADJUSTING BEARINGS

A sharp, metallic knock in the motor, audible every revolution of the crank shaft, may mean that one of the bearings is loose. If retarding spark or removing the carbon does not stop the noise, remove lower half of crank case and examine bearings.

When the loose one is located, it can be taken up by removing the cap and taking out one or more of the thin metal shims. The same holds true of the connecting rod bearings. Note that bearing is bright and shows no indication of a lack of lubrication.

INSERTING PISTON RINGS

Piston rings seldom break, but if one does it can be most easily replaced by removing the connecting rod cap and pulling piston and rod out from below. The rings may be slipped on or off the piston by inserting thin strips of sheet metal under them to prevent their dropping into the grooves, until in their proper places.

ASSEMBLING PISTONS

In assembling pistons and connecting rods, it should be noted that the piston pin bearings are offset from the center line of piston and that a small arrow, cast inside the piston skirt points toward the offset. Pistons should be assembled on the connecting rods with the arrows pointing towards the flat side of the oil dipper. This brings the piston pin bearing closer to the cam shaft side of the motor and during the compression stroke the gas pressure overbalances the piston so that it does not slap back under the force of the explosion.

KEEPING THE MOTOR CLEAN

Nothing will add more to the appearance of the car when the hood is raised, than a clean motor. Use soft cloth moistened with gasoline or kerosene and a stiff brush to get dirt out of sharp corners.

MOTOR LUBRICATING SYSTEM

The motor is provided with an automatic lubricating system which operates as follows:

Oil from the reservoir in the lower half of the crank case is sucked through a strainer into the pump enclosed in the rear end of the crank case. The oil pump forces it through a pipe to the sight feed on the instrument board, where the circulation can be observed by the driver. From the sight feed the oil returns through the oil distributor pipe to splash troughs fastened in the lower half

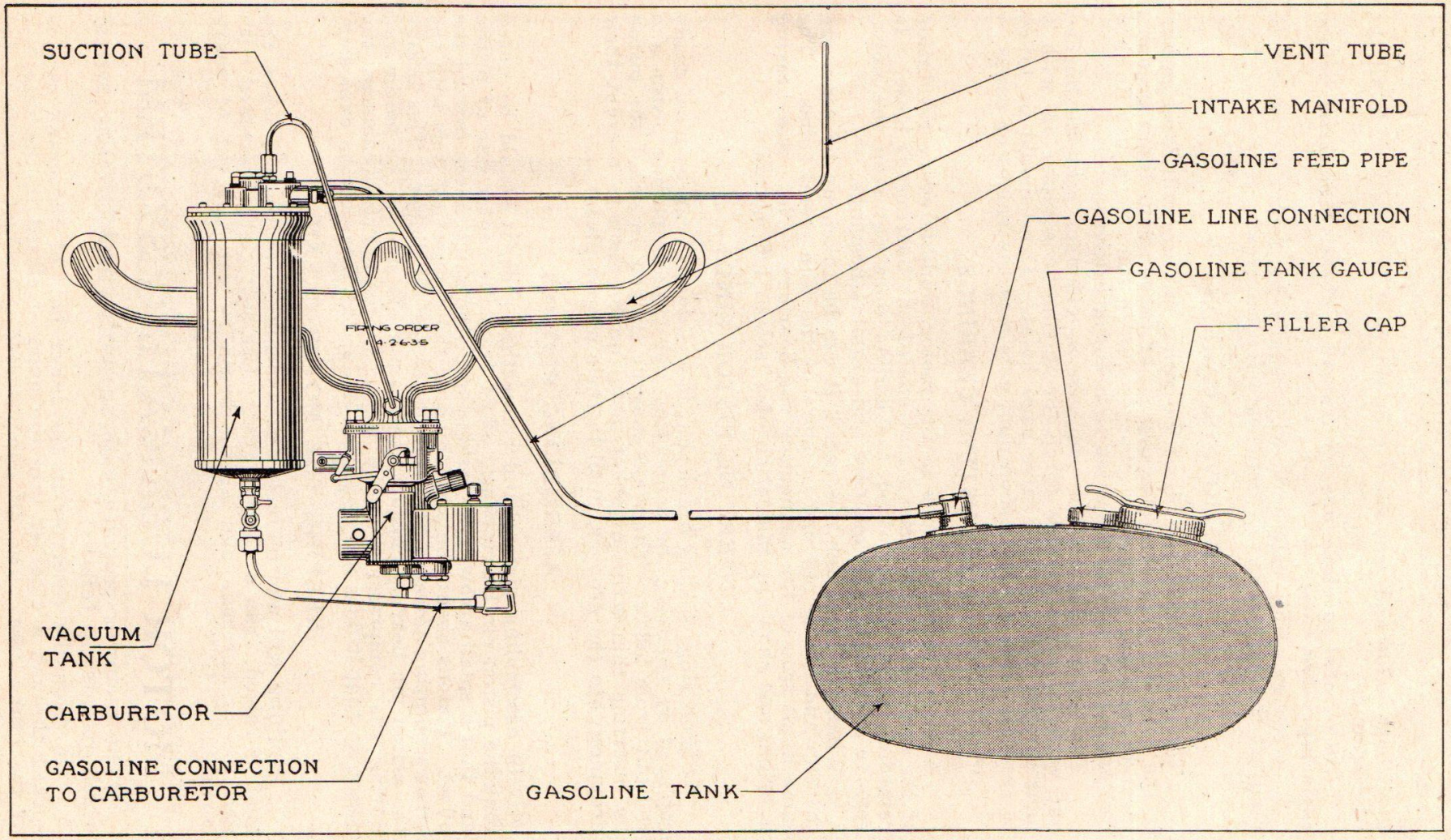

Plate 9
Fuel System

of the crank case, into which the connecting rods dip, forcing some of the oil up into connecting rod bearings, and splashing remainder over the interior of the crank case and up into the pistons and cylinders. As the oil drains back, it is caught in ducts and led to all the bearings of the motor, the excess falling back into the reservoir to be used over again.

OIL CIRCULATING PUMP

The oil pump consists of two small gears enclosed in a close fitting housing and driven by a vertical shaft and spiral gears from the cam shaft. As the gears turn, they take the oil into the spaces between their teeth and carry it around to the outlet, where the action of the teeth meshing together squeezes the oil out of the spaces and forces it to flow to the sight feed on the instrument board. The pump is automatic in action and requires no attention or adjustments, except the addition of fresh oil to the crank case reservoir, as often as necessary to keep the oil level up to the petcock.

SIGHT FEED

The sight feed merely indicates circulation of the oil, and does not show when the supply in the crank case reservoir is running low. Test the oil level by opening petcock at frequent intervals.

FUEL SYSTEM

The fuel system consists of the gasoline tank, piping, vacuum tank, carburetor, and intake manifold. There is nothing connected with the gasoline tank or piping to get out of order, the chief consideration being to carefully strain all gasoline and to avoid leaks which are sometimes caused by road vibration.

VACUUM TANK

The vacuum tank draws the fuel from the gasoline tank at the rear and delivers it to the carburetor at a constant head, as needed. It consists of two steel shells, the inner one of which encloses the float and the valve mechanism attached to the cover, while the outer one acts as the fuel reservoir and is connected to the carburetor. The float operates two small valves which control openings connected to the inlet manifold and to the atmosphere. A flapper check valve closes the bottom of the inner shell. As the inner shell empties, the float falls and opens the atmospheric valve.

The suction of the motor tends to create a vacuum in the inner shell, drawing gasoline into the inner tank from the main fuel tank at the rear of the car. When the inner tank has filled, the float rises, closing the suction valve and opening the atmospheric valve, allowing air to enter the inner tank through the vent tube, while the gasoline passes through the flapper check valve into the outer tank and from there to the carburetor.

The action of the vacuum tank is entirely automatic. There are no adjustments, and it will require no attention aside from an occasional examination of the connections to see that they are tight and free from dirt.

Do not allow the vent tube or the small hole in the gasoline tank filler cap to get stopped up with dirt.

CARBURETOR

The carburetor is the instrument which measures the fuel charges for the motor, and mixes them with the proper amount of air to form a combustible gas. It consists of a float chamber connected to the gasoline supply and a mixing chamber connected to the intake manifold.

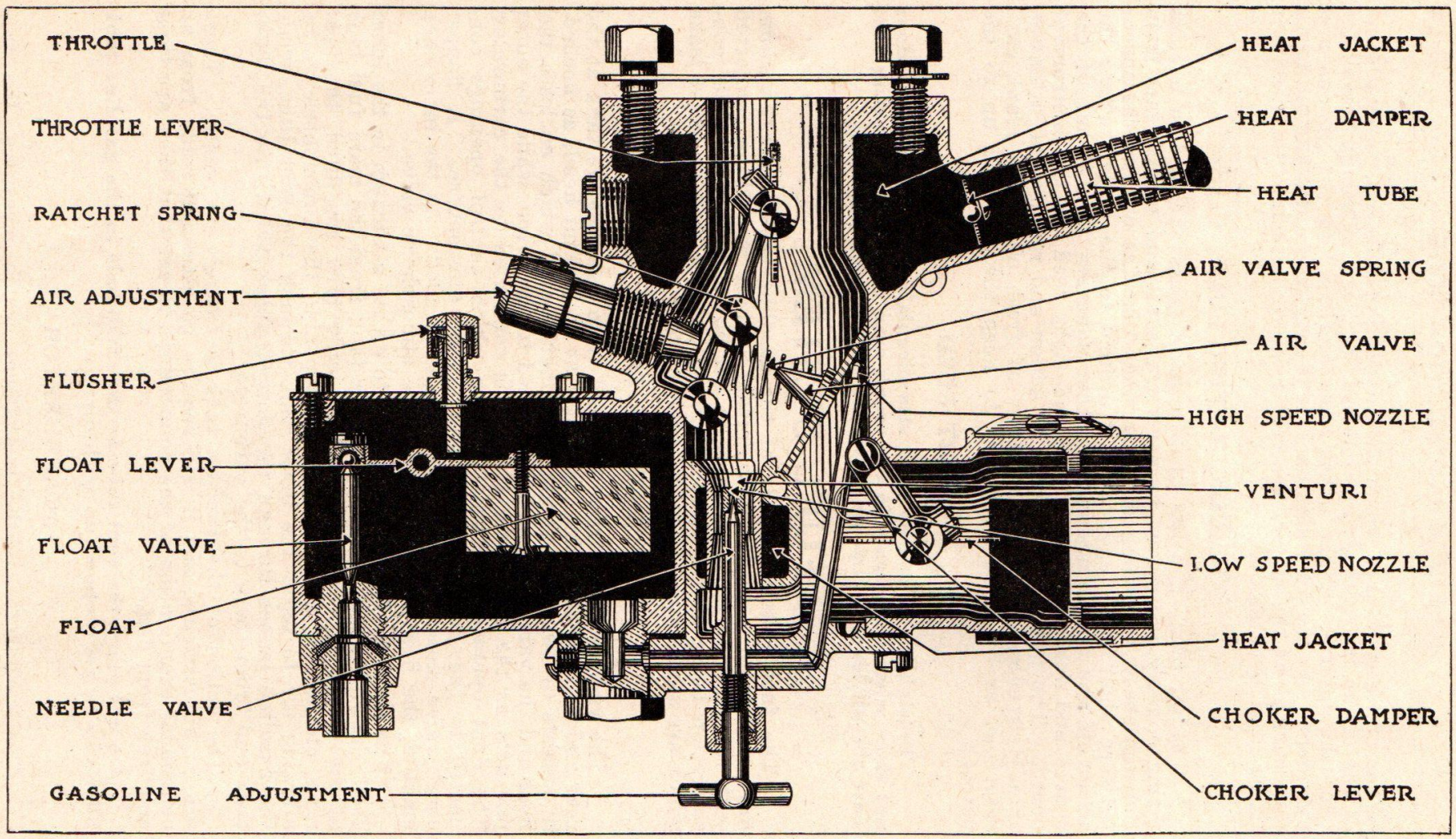

Plate 10
Carburetor

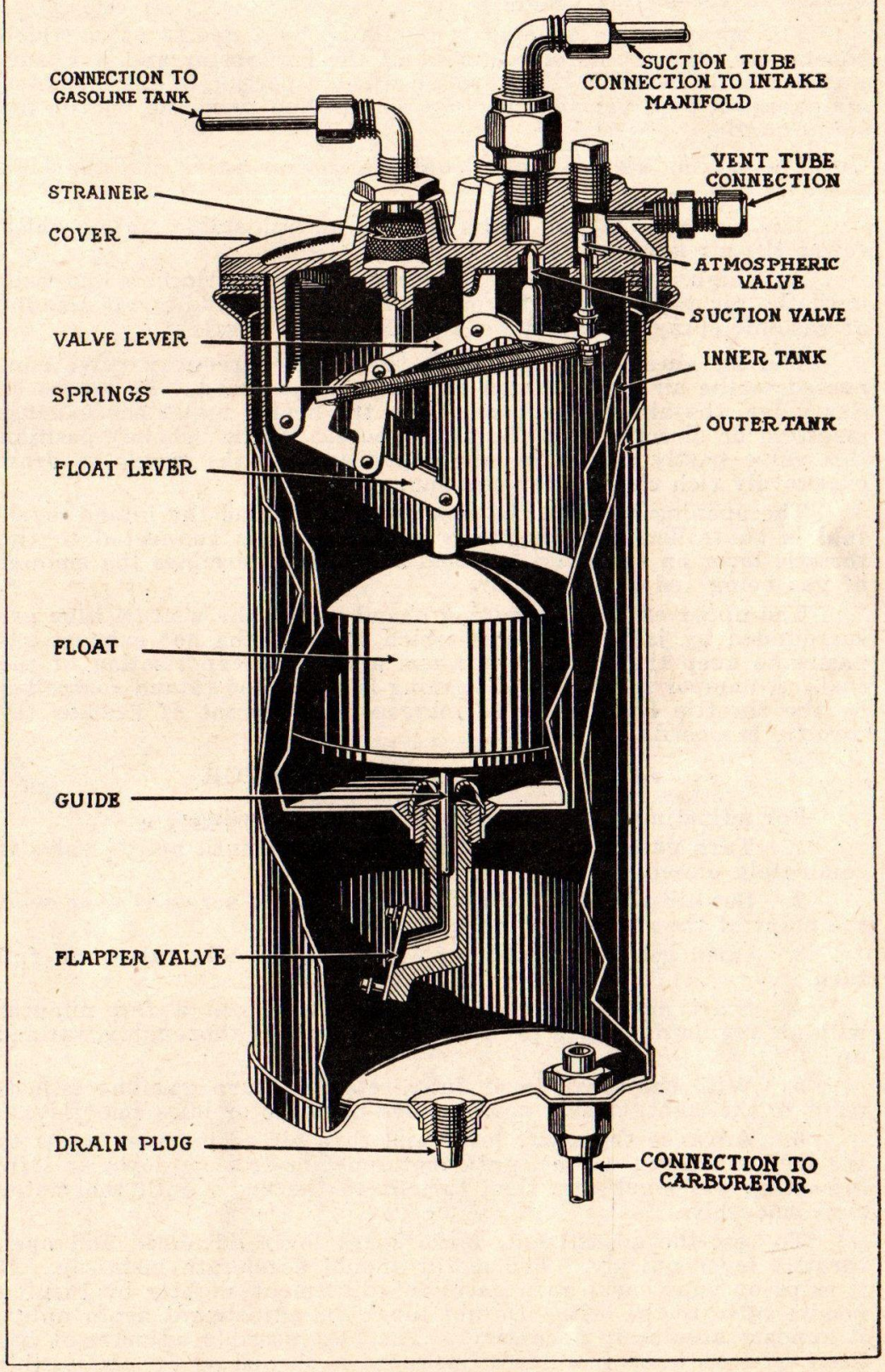

Plate 11

Vacuum Tank

The float chamber contains a cork float attached to a valve in such a manner that fuel is admitted to the carburetor only as it is needed to maintain a constant level in the spray nozzle, which is located in the mixing chamber.

The spray nozzle opening is regulated by a needle valve which constitutes the gasoline adjustment of the carburetor and it is surrounded by the venturi tube through which a portion of the incoming air passes at high velocity, picking up gasoline from the end of the spray nozzle.

The mixing chamber also contains the air valve and the high speed nozzle.

The air valve is held to its seat by an adjustable spring which forms the air adjustment.

At a high rate of speed the velocity of the entering air increases until the air valve is lifted from its seat and an additional amount of gasoline spray is taken from the high speed nozzle.

The air enters the carburetor through a three-way valve connected to the air regulator on the instrument board. By means of this valve, the air can be taken from the heater under the exhaust manifold or directly from the atmosphere. In the "choke" position this valve partly closes the air intake causing the motor to draw excessively rich charges for starting.

The opening between the mixing chamber and the intake manifold is controlled by a butterfly valve which is connected to the throttle lever on the steering wheel and thus determines the amount of gas being fed to the motor.

The upper end of the mixing chamber and the venturi tube are surrounded by jackets through which some of the hot exhaust gas passes to keep the instrument warm and assist vaporization of the fuel. A damper in the jacket opening is connected to and controlled by the throttle lever so as to increase the amount of heat as the throttle is closed.

ADJUSTMENT OF CARBURETOR

For adjusting the carburetor, note the following:

1. Turn gasoline adjustment to the right until needle valve is completely closed.

2. Set air adjusting screw, so that end of screw is even with the point of the ratchet spring just above it.

3. Open gasoline adjustment by giving needle valve one full turn.

4. Start motor as usual; allowing it to run a few minutes with air regulator turned to "Hot" until motor is thoroughly warmed up.

5. With the spark lever fully retarded, turn gasoline adjustment to the right, closing needle valve until motor idles smoothly.

6. Advance the spark lever and turn air adjustment screw to the left, a little at a time, until motor begins to slow down or skip, indicating too much air; then turn it to the right until the motor runs smoothly.

To test the adjustment, leave spark lever advanced and open throttle lever quickly. The motor should accelerate instantly. If it skips or pops back, open gasoline adjustment slightly by turning needle valve to the left. Do not touch air adjustment again unless it appears absolutely necessary. The best possible adjustment has been secured when gasoline adjustment is turned as far as possible to the right, and air adjustment is turned as far as possible to the left, letting motor idle smoothly and accelerate quickly when throttle is opened.

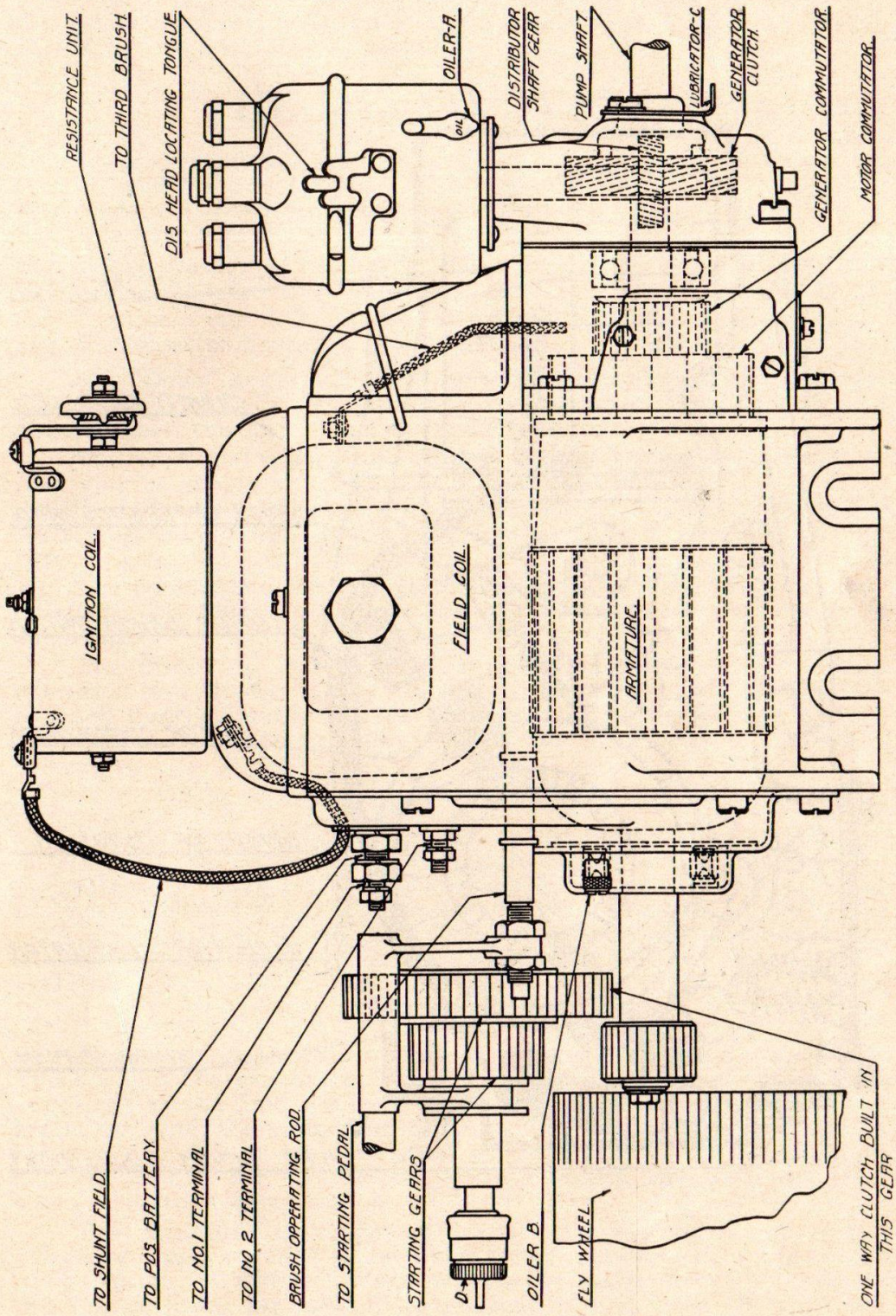

Plate 12

Side View of Motor Generator

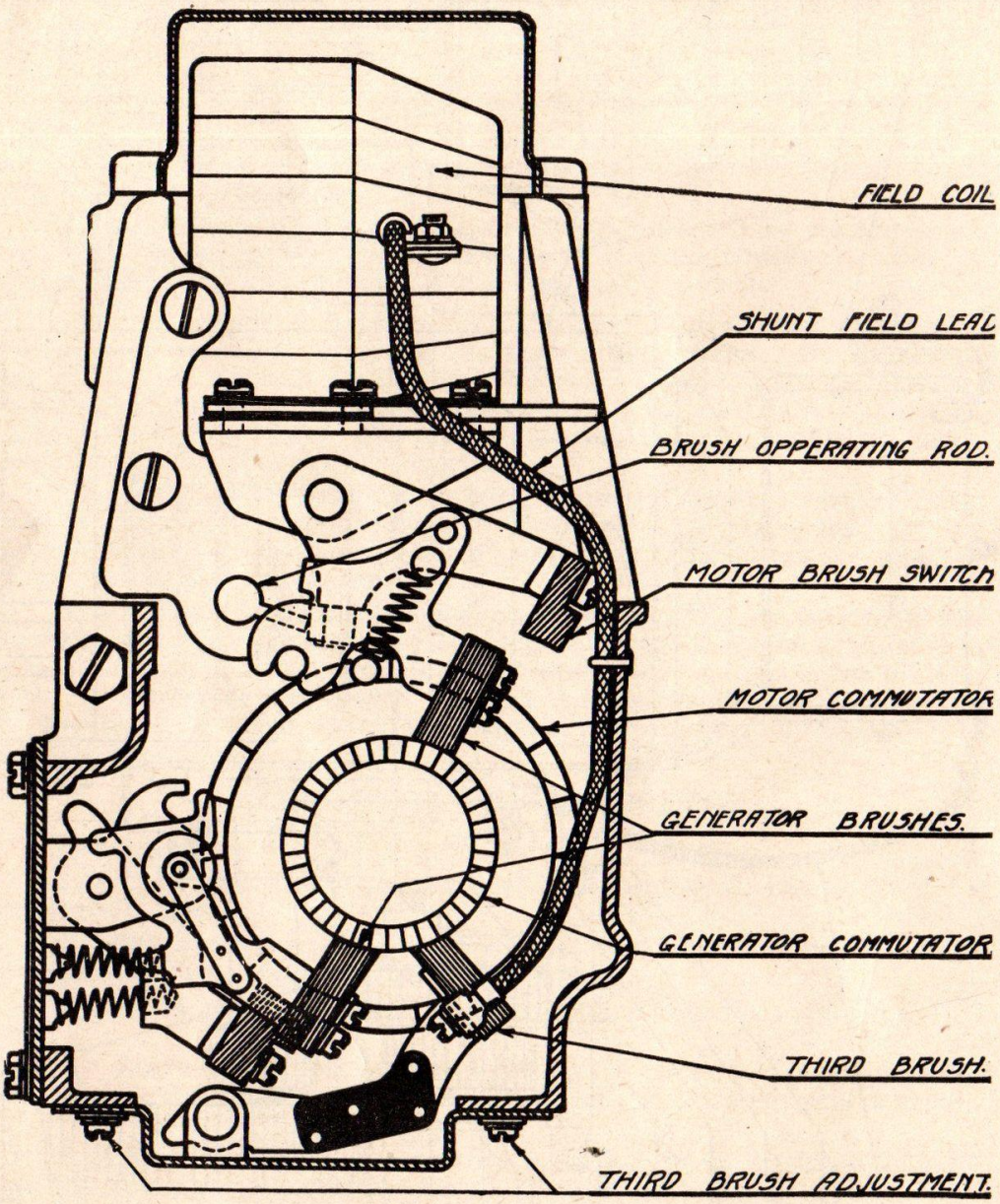

Plate 13

End View of Motor Generator

Do not attempt to adjust carburetor until it is certain that motor has good compression in each cylinder; that a good hot spark occurs at each plug at the proper time; and that gasoline is reaching the carburetor regularly from the vacuum tank. The carburetor should be the last thing to touch.

THE DELCO SYSTEM

The electrical equipment includes the Delco single unit starting, lighting and ignition system. This is manufactured by The Dayton Engineering Laboratories Company, Dayton, Ohio. It consists of the following parts:

Motor Generator	No. 70
Motor Clutch	No. 12224
Ignition Coil	No. 2138
Combination Switch	No. 1066

The Delco apparatus does not include the storage battery, the lamps, horn or wiring, although these connect with, and depend directly upon the rest of the electrical system.

The electrical system on the automobile is for the purpose of providing a supply of energy for lighting, ignition and cranking. As all of these are necessary when the engine is not operating, the storage battery is used for storing energy which is available at any time.

The generator is the apparatus for keeping the storage battery charged; this being driven by the engine whenever the engine is operating.

The motor is for the purpose of performing the cranking operation and utilizes energy from the storage battery. The ignition coil and distributor are for the purpose of securing suitable energy for ignition purposes, and properly distributing this to the different cylinders.

MOTOR GENERATOR

The motor generator is mounted on the right side of the engine, in front of the flywheel. This piece of apparatus includes the motor feature which performs the cranking operation, the generating feature which is for the purpose of supplying electrical energy, and carries on its forward end, the distributor which is for the purpose of securing the proper timing and distribution of the ignition current.

CONSTRUCTION

The motor generator consists essentially of two main elements. These being the generator frame which is really an electromagnet energized by the field windings and having poles on each side of the armature, and the armature which is the revolving element, this being a round iron core mounted on a shaft. In the longitudinal slots of the core are wound two separate copper wire windings, each connecting to a commutator.

The armature is supported by bearings at each end of the armature shaft so that it revolves freely between the pole pieces of the frame. The brushes are mounted to make contact on each of the commutators for conducting current to and from the different windings, the electrical current being induced in the generator windings when the armature is revolved by the pump shaft, and current being passed through the motor windings from the storage battery during the cranking operation.

The distributor, which is mounted on the front end of the motor generator in no way affects the operation of either the motor or the generator.

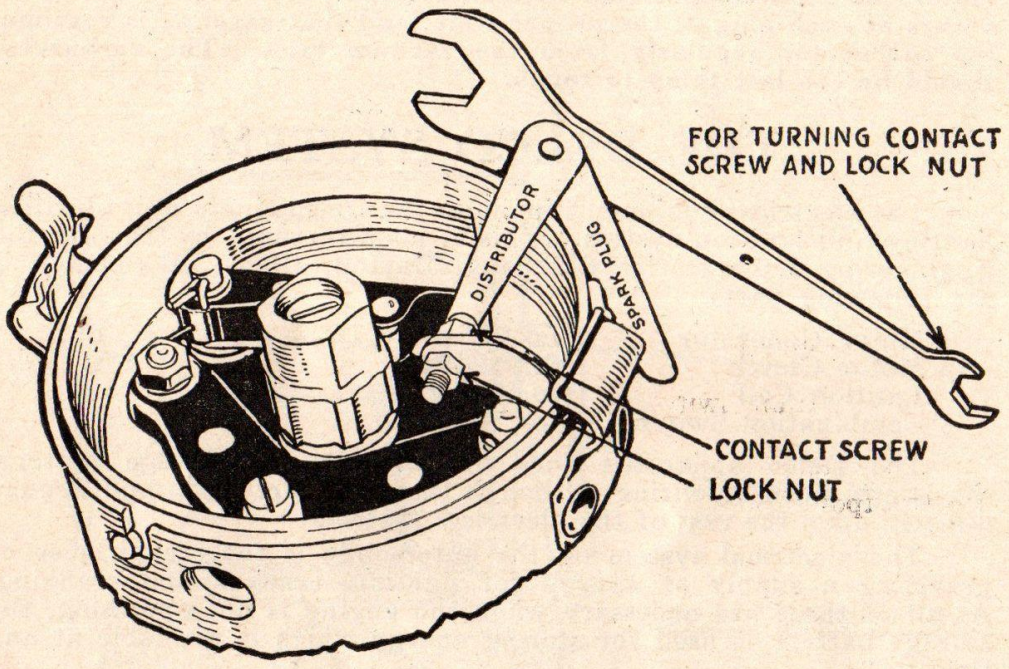

Adjustment of Distributor Breaker Points

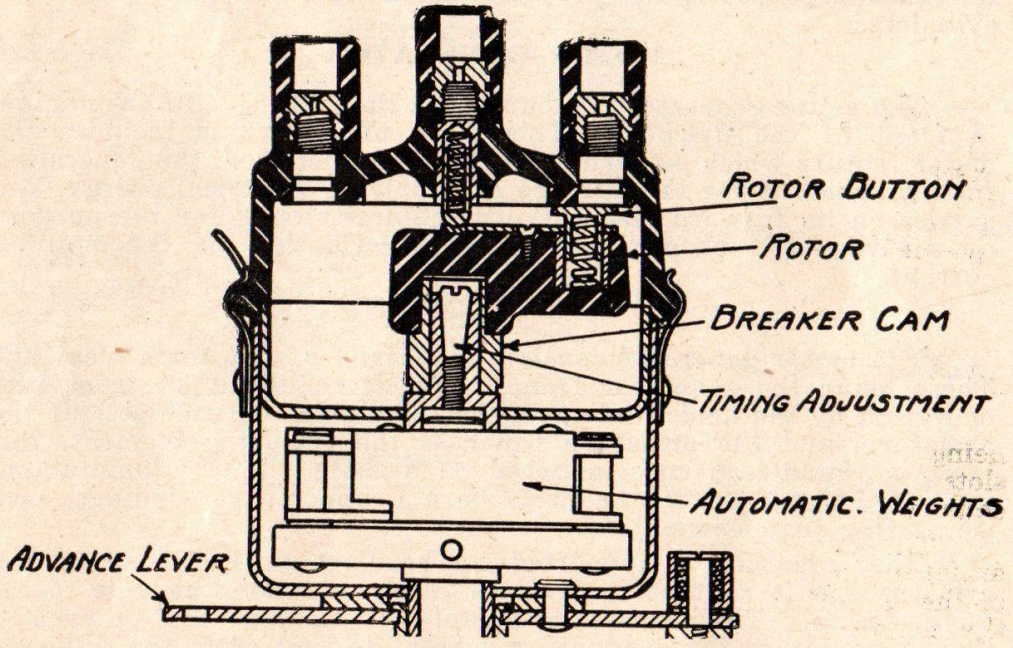

Sectional View of Distributor

OPERATION

The motor generator performs three distinctively different functions which may be described as follows:

(1) **Motoring the generator.** This operation is necessary in order that the starting gears may always be brought in mesh with the small gear on the armature shaft, and the teeth on the flywheel. This takes place whenever the ignition button on the combination switch is pulled out. It completes the circuit from the storage battery to the generator windings and allows current to be discharged from the storage battery, through the shunt field windings and the generator windings on the armature. As there is no difference between the winding of a motor and a generator, this operation causes the motor generator to operate as a motor at comparatively low speeds.

It is important to remember in this connection, that it is necessary for the current to flow through both the shunt field windings and generator windings on the armature before this operation can take place.

(2) **The cranking operation.** The cranking operation is performed when the starting gears are brought fully into mesh. This is done by depressing the starting pedal. It will be noted that the starting pedal operates both the starting gears and the brush operating rod. When the starting gears are fully meshed, the brush operating rod allows the motor brush to come in contact with the motor commutator, and at the same time raises the generator brush off the commutator. The motor brush completes the cranking circuit, allowing current to come from the storage battery through the series field winding and motor armature winding, this causing the cranking operation to be completed. The circuit of this is very plainly shown in the heavy line in the circuit diagram. The cranking operation requires a heavy discharge from the storage battery, and any loose connections in the cranking circuit, or a nearly discharged storage battery will prevent the cranking, although these may not be such that they will affect either the lights or ignition.

(3) **Generating electrical energy.** After cranking operation is completed, the starting pedal is returned by a spring, this causing the motor brush to raise from the motor commutator, and the generator brush to make contact. The armature is driven by the pump shaft through the one-way generator clutch, and the generator circuit is completed through the combination switch to the storage battery. At very low speeds, the voltage generated does not equal that of the storage battery, and a small amount of current is discharged through this circuit. The amount of this can be observed by watching the ammeter when the lights are off. But at normal driving speeds of the engine, the voltage generated exceeds that of the battery, and current is being charged into the storage battery, or used for lights or ignition, or both. The ammeter is so connected that it indicates the amount of current that is going to or from the storage battery, with the exception of the cranking current. Thus when the car is being operated with the lights on, the ammeter will not indicate the total output of the generator, but will indicate only the amount of the output of the generator which is actually charged into the storage battery, this being the output of the generator, less the ignition current and what is being used for lights. With this connection, the ammeter will indicate the amount of current that is being discharged from the storage battery for the lights when the engine is not operating.

REGULATION

The output of the generator is controlled by the third brush form of regulation. The location of this brush and its connections

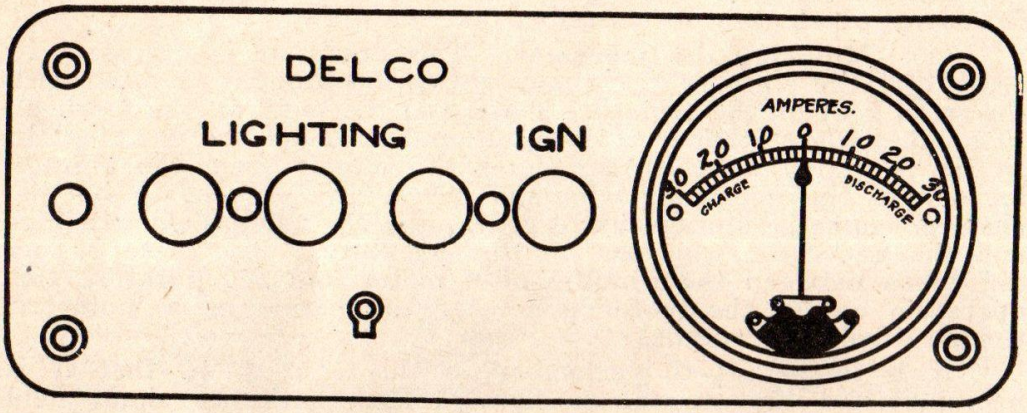

Front View of Delco Switch

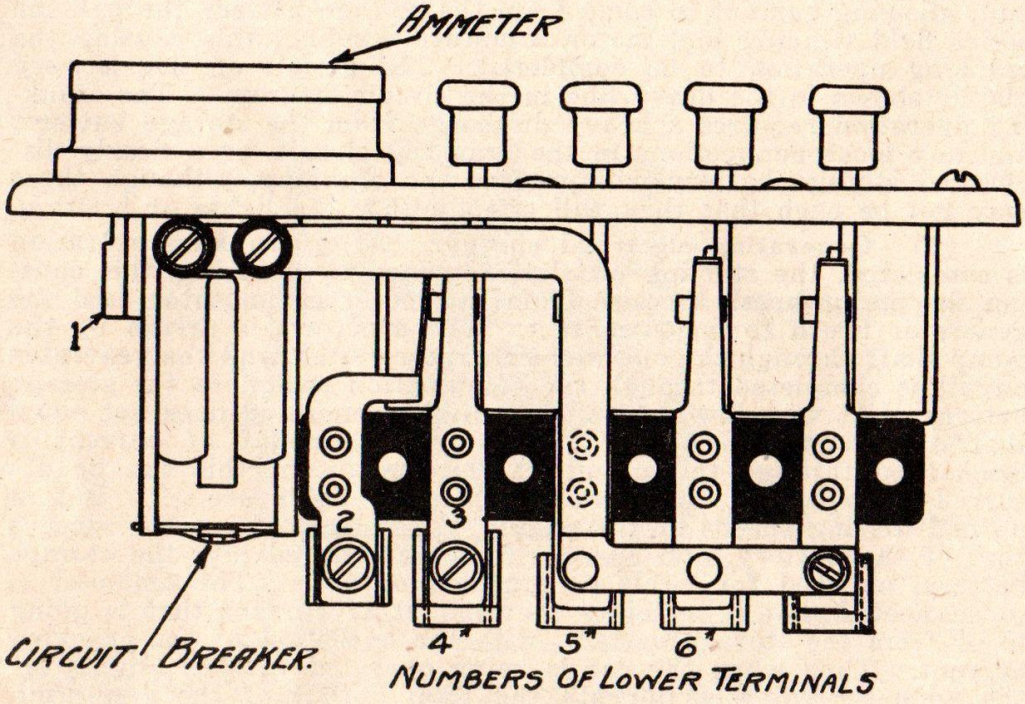

View Showing Switch Wire Terminals

are shown in the figure. The electrical circuit is also shown in the circuit diagram. The regulation of the generator is necessary on account of the variable speeds at which it is driven, it being necessary that the generator deliver current for charging the storage battery, or operating lights, horn, and ignition at driving speeds corresponding to seven or eight miles an hour and not overcharging at the highest possible engine speeds.

The generators are adjusted at the factory for supplying current in the proper amounts under average driving conditions, but there are cars which are operated under conditions which are not normal, that is, cars which are driven a great deal at night on comparatively short trips, and are required to stand a considerable length of time with the lights burning. Such cars require more current from the generator for the amount of driving than others. On the other hand cars that are driven mostly in day time and using the lights and starter comparatively little require less current from the generator. In order to provide the proper charging rate for cars under all conditions, the output of the generator is adjustable. This is done by the third brush adjustment which provides a movement of the third brush towards the right or left as shown in the figure. Moving this brush towards the left increases the output, and moving it towards the right decreases the output. This adjustment should be made only by a competent mechanic, after he has studied the driving conditions of the car. The maximum output of the generator should never exceed twenty amperes, and whenever this brush is moved to change the output of the generator, it must be properly seated to the commutator by the use of fine sandpaper. This adjustment should be made only by the dealer or his mechanic.

LUBRICATION

There are five places to lubricate the motor generator. Referring to the plate, these are:

(1) Oiler "A" is for lubricating the bearings on the distributor shaft. This should receive four or five drops of oil every week.

(2) Oiler "B" is for lubricating the roller bearings on the rear end of the armature shaft. This should receive four or five drops of engine oil every week.

(3) Lubricator "C" in the front end of the motor generator. This is for lubricating the ball bearing on the armature shaft, the distributor driving gears and generator clutch. This is packed with cup grease, and should be repacked twice a season. It is also advisable to add a small amount of lubricating oil in cold weather when cup grease has a tendency to become hardened.

(4) Grease cup "D" is for lubricating the starting gear shaft, and the one-way clutch. This forces grease through the starting gear shaft into the one-way clutch. This should be given a turn or two every two weeks.

(5) That part of the inside of the distributor head upon which the rotor button bears, should have a small amount of vaseline applied to it two or three times during the first two thousand miles usage of the car, so that the rotor button can polish this rotor track, and prevent cutting. The rotor button should be kept polished smooth and bright.

DISTRIBUTOR

The distributor is mounted on the front end of the motor generator. This is for the purpose of securing the proper timing and distribution of the ignition current. The distributor is driven by spiral gears from the generator driving clutch, the distributor shaft rotating at one-half engine speed. This shaft carries the weights which automatically advance the timing as the speed increases. This

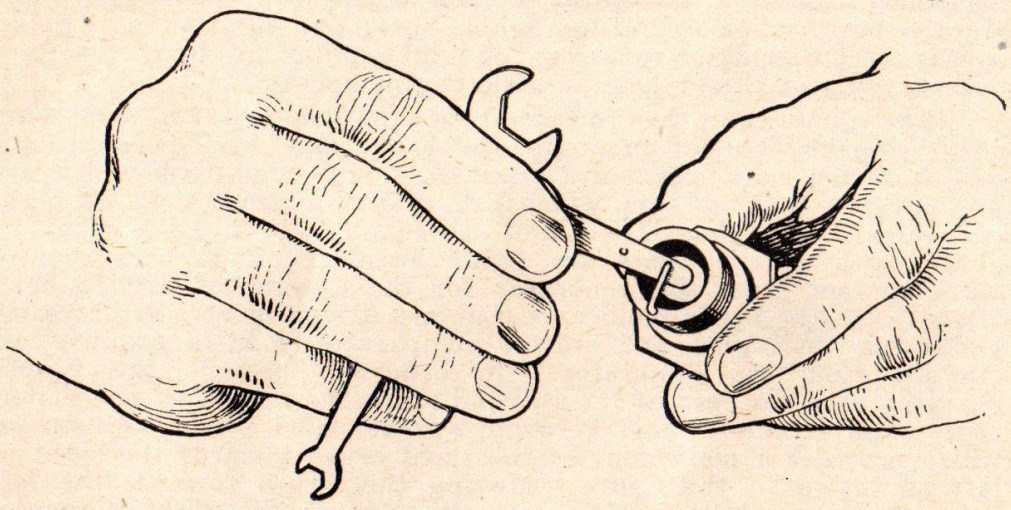

Adjusting Electrodes on Spark Plug

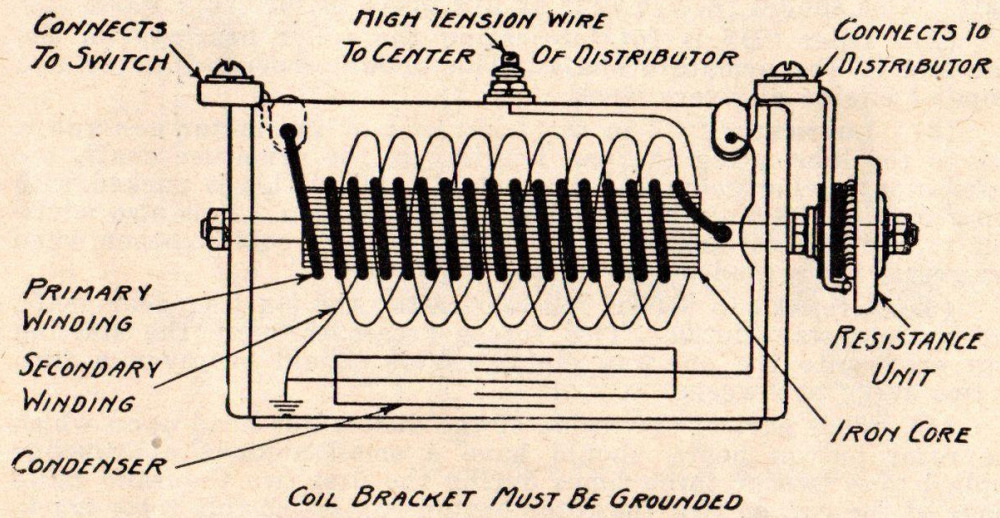

Sectional View of High Tension Coil

Plate 16

is to compensate for the time required for the burning of the combustible mixture in the combustion chamber.

The distributor is also equipped with a manual control which is for the purpose of securing the proper retard for starting, and the proper advance for very low engine speeds over which the automatic feature has no control.

The timing of the ignition is obtained by the timing contacts and breaker cams. The timing is effected by the interruption of the current through the primary winding of the ignition coil. The spark occurs at the instant the timer contacts break the circuit.

The breaker cam and rotor are so designed that when the breaker cam opens the contacts, and the high tension current is induced in the ignition coil, the rotor button is in contact with the proper high tension terminal in the distributor head for firing the cylinder under compression.

ADJUSTING TIMING CONTACTS

The timing contacts should be so adjusted that when the fibre block on the contact arm is on the highest part of the breaker cam, the contacts are apart the thickness of the gauge on the distributor wrench marked "distributor," or on some of the older distributor wrenches, the gauge is marked "for steel cam distributor." This is eighteen thousandths of an inch (.018").

CARE OF DISTRIBUTOR HEAD AND ROTOR

Since the voltage for firing an automobile engine must be very high, it is necessary to consider all parts which conduct this current as high voltage apparatus. Therefore it is necessary that the distributor head and rotor be kept clean, as a very small amount of conducting foreign matter will allow this high-tension current to be conducted to the improper high-tension terminal or the ground, either of which will cause faulty ignition. The distributor head should be lubricated with a small amount of vaseline at the point where the rotor button makes contact until the rotor button polishes this track, and the rotor button should be polished smooth so as not to cut the high-tension contacts in the distributor head. Whenever the distributor head is removed, care should be taken to see that the center terminal in the distributor head makes contact with the rotor, and that the rotor button does not have excessive spring tension on the head.

ADJUSTING SPARK PLUGS

The proper method of adjusting the electrodes on the spark plug is shown in the figure. On the older distributor wrenches where the gauges are marked "fibre cam" and "steel cam," both gauges taken together are required. On the newer distributor wrenches where the gauges are marked "distributor" and "spark plug," only the gauge marked "spark plug" is required. This adjustment gives twenty-eight thousandths of an inch (.028"). A slightly wider adjustment is usually permissible.

IGNITION COIL

The ignition coil is mounted on top of the motor generator. It consists of an iron core made up of a number of small iron wires. Wound around this and insulated from it is the primary winding, which consists of a comparatively few turns of copper wire of sufficient size to carry the primary current with but very little heating.

It is through this winding that current is supplied by the generator or storage battery. Wound around and insulated from the primary winding is the secondary winding which consists of several

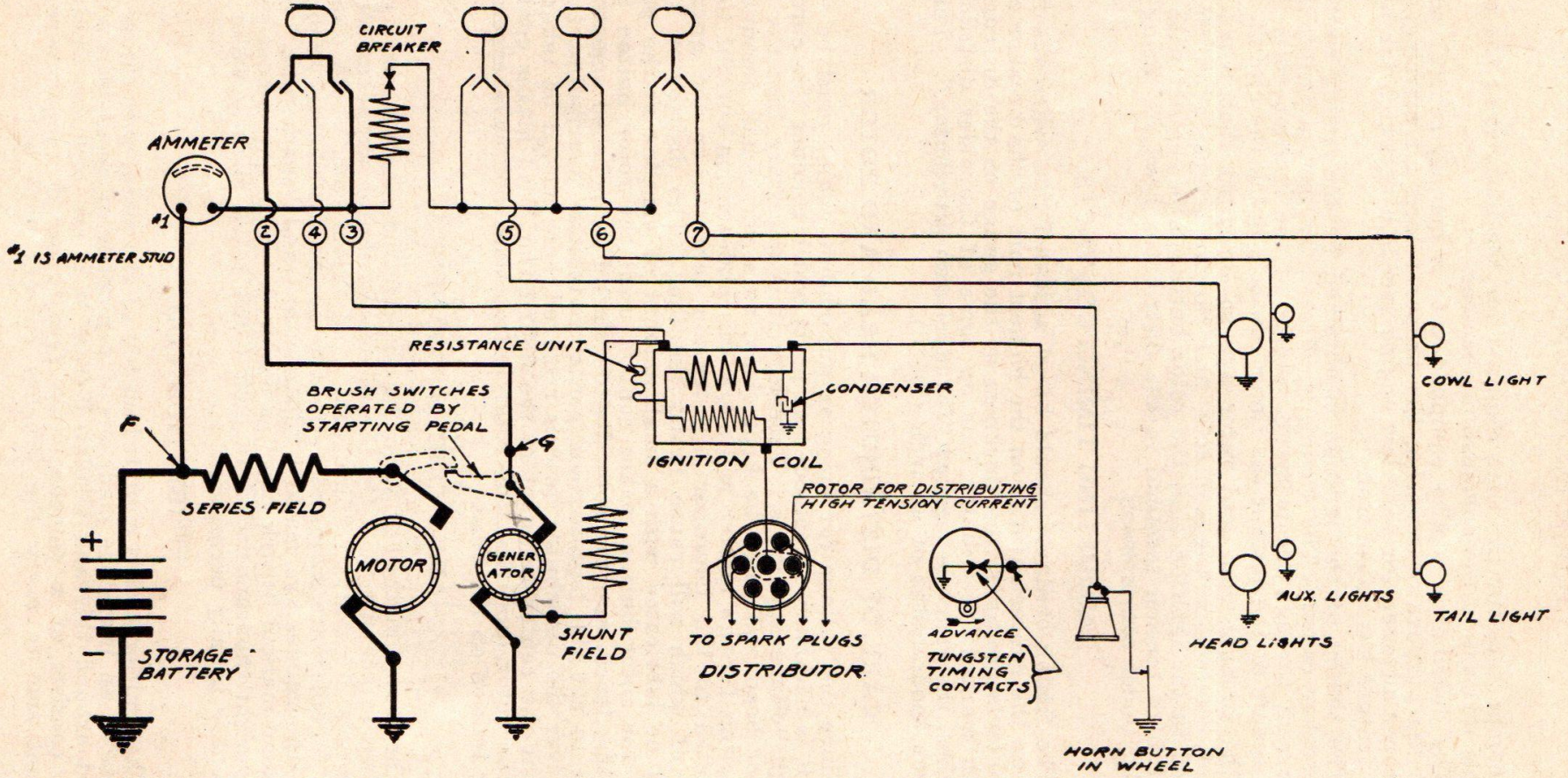

Plate 17
Circuit Diagram

thousand turns of very fine copper wire, the different layers of which are well insulated from each other and from the primary winding. One end of the secondary winding is grounded to the ignition coil bracket, the other terminates at the high-tension terminal near the center of the coil.

CONDENSER

The condenser is incorporated in the base of the ignition coil. This consists of two long strips of tinfoil insulated from each other by strips of paraffined paper, each strip of tinfoil being provided with a terminal which is connected as shown in the circuit diagram.

RESISTANCE UNIT

The resistance unit is mounted on the forward end of the ignition coil. It consists of special resistance wire wound on a porcelain spool, is for the purpose of preventing an excessive discharge from the storage battery when the engine is not running at the time the contacts are closed. It also causes the spark obtained from the ignition coil to be more nearly uniform at the different speeds of the engine.

TIMING THE IGNITION

The ignition system is carefully timed when the car leaves the factory, and under ordinary conditions need not to be touched by the car owner, but should it be necessary to retime the ignition system for any reason, it can be done as follows:

(1) Place the spark lever on the steering wheel in the fully retarded position.

(2) Turn engine to seven degree mark (approximately one inch from the dead center) on the flywheel with No. 1 cylinder which is the one next to the radiator on the firing stroke.

(3) Loosen the timing adjustment screw in the center of the distributor shaft and turn the breaker cam so that the rotor button will be in the position under No. 1 high-tension terminal when the distributor head is properly located. Locate the breaker cam carefully in this position so that when the slack in the distributor gears is rocked forward, the contacts will be opened by the breaker cam, and when the slack in the gears is rocked backwards, the contacts will just close.

(4) Tighten the adjustment screw securely and replace rotor and distributor head with the head properly located by the locating tongue and the hold-down clip. The cylinders fire in the following order: 1-4-2-6-3-5.

COMBINATION SWITCH

The combination switch is located on the instrument board. This is for the purpose of controlling the lights and ignition circuits, as well as the circuit between the generator and the storage battery. The button on the extreme left of the switch controls the cowl and tail lights. The next button controls the auxiliary head lights. The third button controls the large head lamps. The button marked "IGN" controls both the ignition circuit and the circuit between the generator and storage battery. Thus it takes the place of the automatic cut-out which is very commonly used for this purpose. For this reason the ignition button should not be left on when the engine is not running.

The ammeter located on the right of the combination switch shows the amount of current that is being charged into the storage battery, or discharged from it. Its operation is more fully described under the heading of "Generating Electrical Energy."

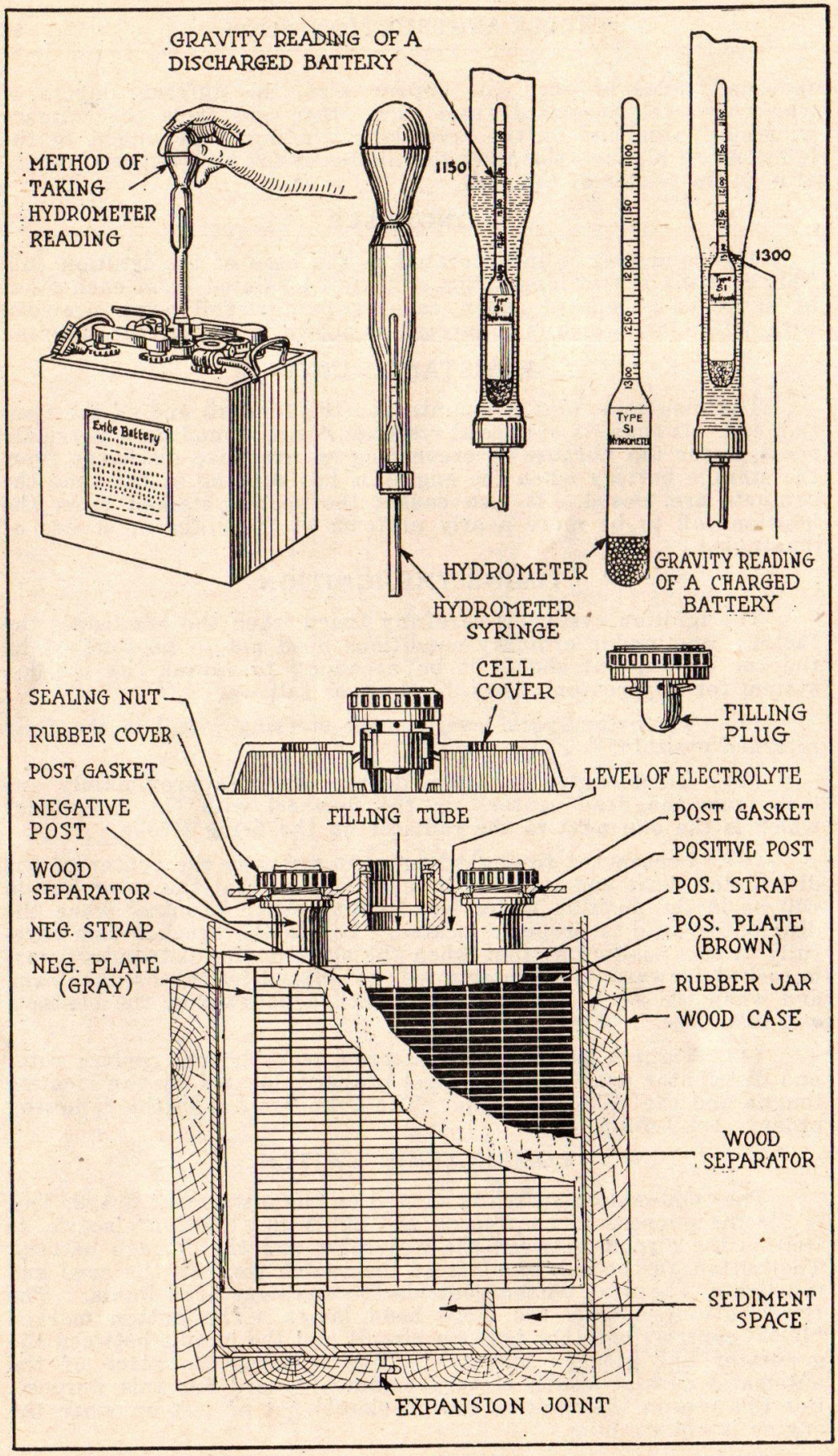

Plate 18

Storage Battery

CIRCUIT BREAKER

On the back of the combination switch is located the circuit breaker. This is the protective device which prevents excessive discharging of the storage battery, or damage to the switch or light wires in the event of ground on any of these wires. All of the current for the lights is conducted through the circuit breaker. Whenever an excessive current flows through the circuit breaker, it intermittently opens the circuit, causing a clicking sound. This will continue until the ground is removed, or the switch is operated to open the circuit on the grounded wire. When the ground is removed the circuit is automatically restored, there being nothing to replace as is the case with fuses.

The numbers on the switch terminals correspond with the numbers on the circuit diagram, this making it comparatively easy to connect up this switch if for any reason it has been disconnected.

STORAGE BATTERY

The storage battery used with the Buick-Delco electric starting, lighting and ignition system is known as the "Exide type 3-XC-13-1" and is manufactured by the Electric Storage Battery Company of Philadelphia, Pa., by whom it is guaranteed as follows:

BATTERY GUARANTEE

"We guarantee the 'Exide' automobile starting and lighting battery in this car for a period of six months from the date of manufacture, which date is stamped on the battery name plate."

"On delivery at our factory, Philadelphia, Pa., or at any 'Exide' Battery Depot, within six (6) months from date of manufacture, and transportation charges prepaid, we will replace, free of expense, this 'Exide' starting and lighting battery, if defective or incapable of giving its rated capacity for any reason other than lack of charge." The Electric Storage Battery Company.

BATTERY SERVICE

The Electric Storage Battery Company maintain "Exide" Battery Depots which carry a complete stock of batteries and battery repairs, and which are fully equipped to do any kind of battery repair work, in the following cities:

EXIDE BATTERY DEPOTS

Atlanta	Cor. Peach Tree and Baker Streets
Boston	718-720 Beacon Street
Chicago	333West 35th Street
Cleveland	5121 Perkins Avenue
Detroit	Woodward and Garfield Avenues
Denver	1424 Wazee Street
Kansas City	1708-10 Main Street
New York City	527 West 23rd Street
Philadelphia	Allegheny Ave. and 19th Street
Rochester	184 Clinton Ave., South
San Francisco	1536-1556 Bush Street
St. Louis	2038 Walnut Street
Washington	1828 L. St., N. W.

BATTERY CONSTRUCTION

The storage battery is essentially the reservoir in which the excess electrical energy, generated by the Delco generator when the car is running, is stored for future use in cranking the motor and operating the lights. It is composed of three cells or hard rubber

jars in which a number of lead plates are immersed in a solution of sulphuric acid and distilled water, known as the electrolyte. The plates are stiff lead grids which hold a paste made of various oxides of lead and known as the "active material." Six of the plates in each cell are joined to the positive terminal and seven to the negative terminal, thin wooden "separators" being inserted between the plates to prevent them touching one another. In the original charging process the active material on the positive plates becomes converted into brown peroxide of lead, while that on the negative plates assumes the form of gray spongy metallic lead.

ACTION OF STORAGE BATTERY

When current is taken from the storage battery for lighting or cranking, the sulphuric acid in the electrolyte combines with the active material of the plates to form sulphate of lead, and when the battery is recharged, either by the current from the Delco generator, or from an outside source, the lead sulphate is again converted into the original active material and the acid set free in the solution.

Sulphuric acid does not evaporate and unless one of the battery jars should leak, the amount of acid in the cell remains always the same, regardless of whether it is combined with the active material in the form of sulphate, or free in the solution, but since the acid combines with the active material of the plates to form sulphate as the battery is discharged, the amount of free acid remaining in the solution at any time indicates accurately the charged or discharged condition of the battery. Any measurement therefore of the relative amount of acid in the electrolyte will also be a measurement of the battery's charge.

THE HYDROMETER

Sulphuric acid is heavier than water and in a mixture of acid and water such as the electrolyte of the storage battery, the specific gravity will be proportional to the amount of acid. The hydrometer consists of a weighted float with a graduated stem, which when immersed in a solution of acid and water, sinks to a certain depth depending on the specific gravity of the solution. The hydrometer thus measures the relative amount of acid in the electrolyte and consequently reveals the condition of the battery.

In using the hydrometer, each cell should be tested separately by inserting the end of the hydrometer syringe in the filler opening and drawing up enough of the electrolyte to float the hydrometer bulb free in the liquid, the reading of the scale at the surface of the liquid being the "specific gravity" of the electrolyte.

A specific gravity of 1.275 to 1.300 indicates a fully charged battery in good condition.

A specific gravity of 1.200 to 1.250 indicates a half charged battery.

A specific gravity below 1.150 indicates a completely exhausted battery which should have immediate expert attention.

When testing battery with the hydrometer remove the filler plug from only one cell at a time and be sure to put the electrolyte back in the same cell from which it was taken.

ADDING WATER

Sulphuric acid does not evaporate and will not freeze, therefore it is never necessary to add any acid to a battery cell, and there is no danger of a fully charged battery (gravity above 1.250) freezing in the coldest weather. The water in the electrolyte, however, will gradually evaporate, especially in warm weather and during long

trips when the battery is being charged continuously. This evaporation should be replaced by the addition of sufficient pure distilled water at frequent intervals to keep the plates completely covered. Keep the filler plugs tight to prevent escape of the solution.

Add nothing but pure distilled water to the battery and do it often enough to keep the plates covered. Never add acid.

Aside from the addition of water to keep the plates covered with electrolyte the storage battery requires very little attention. The terminals should be kept clean and tight and occasional hydrometer readings taken to make sure that the battery is kept charged by the generator. If the battery ever becomes discharged it should be taken to the nearest Buick dealer or Service Station at once for a careful inspection. In the event of adding water in extreme cold weather, be sure that water is thoroughly mixed in solution, by running motor, before car is left to stand any length of time.

Never attempt to run the car with the storage battery disconnected.

COOLING SYSTEM

The cooling system includes the radiator, water circulating pump, water connections and radiator fan.

RADIATOR

The radiator consists of an upper and lower tank connected by a large number of narrow passages in the cellular core. The hot water from the motor enters the upper tank and gradually flows through the passages in the core to the lower tank while a current of cool air is circulated through the opening in the core by the radiator fan. An enameled shell encloses the radiator and supports it on the frame of the car.

WATER PUMP

The water pump is of the centrifugal type and consists of an impellor with curved blades, fastened to the shaft, and a loose fitting, air tight casting, with inlet and outlet connections, fastened to the motor crank case. As the impellor revolves, it sucks water from the radiator to the center of the impellor and by centrifugal force, throws it off at the outer ends of the blades and out of the casing to the cylinder jackets.

In order to keep the casing air tight the pump shaft is carried in glands, filled with prepared wick packing which also acts as a lubricant. These glands should be tightened from time to time as they show indications of leakage, but care must be taken to keep them from binding the shaft.

The bearings of the water pump are provided with stuffing nuts to keep them air and water tight, and should be repacked with graphited wicking when they start to leak. No other lubrication is necessary.

RADIATOR FAN

The radiator fan is mounted on the front end of the motor and is driven by belt from the cam shaft. It should be lubricated at frequent intervals by introducing motor oil through oil plug hole on fan hub. The belt can be tightened by loosening clamp bolt and swinging bracket up.

To prevent overheating, keep radiator filled with clean water, see that fan belt is tight, and avoid leaky connections.

DRAINING

To drain cooling system, take wing plug out of bottom of radiator, open draincock in water pump and remove pipe plug from

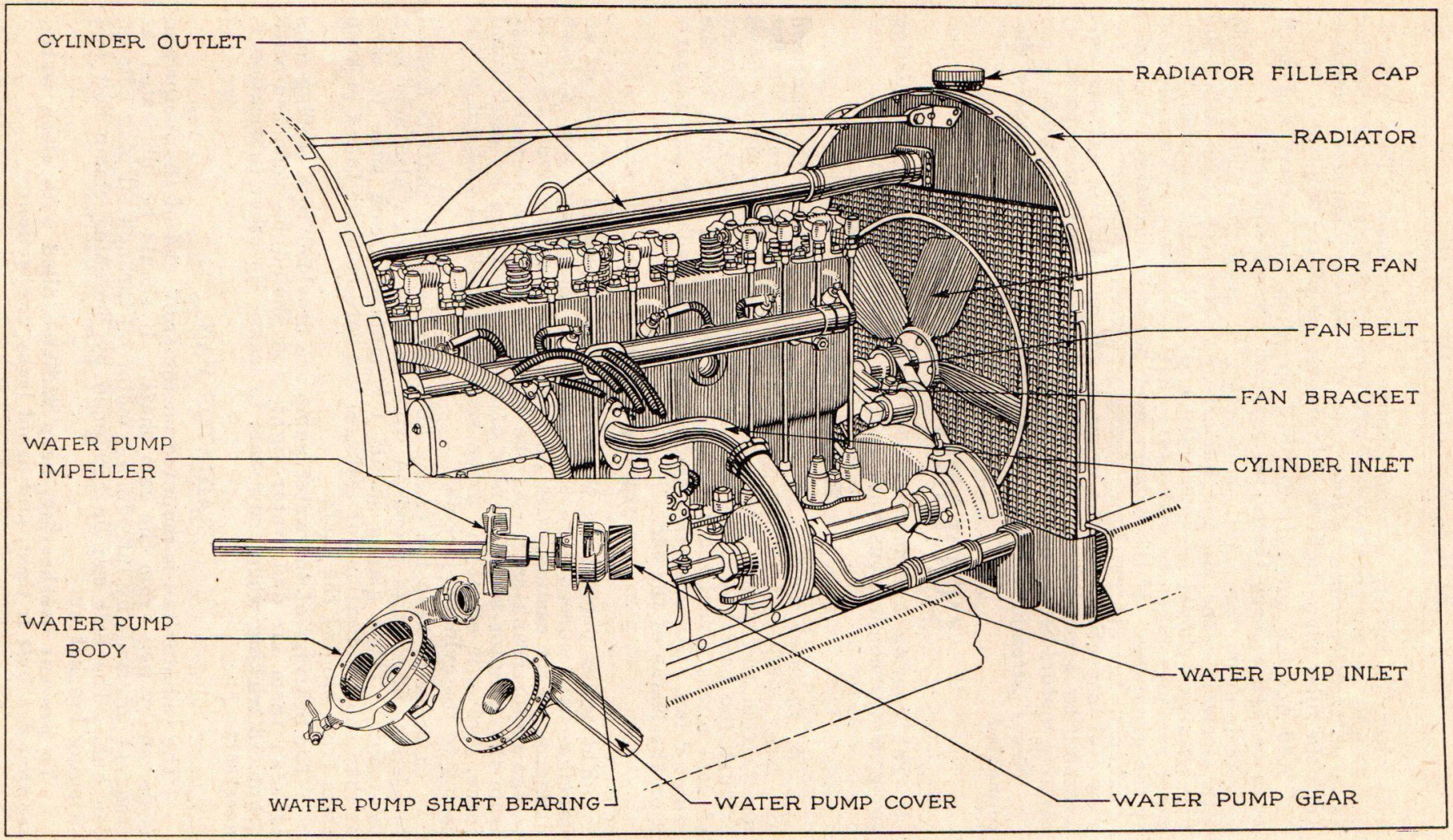

Plate 19
Cooling System

water jacket of cylinder block. Do not store car without draining cooling system thoroughly.

ANTI-FREEZING MIXTURE

In cold weather, the cooling system should be drained and filled with a solution that will not freeze when car is allowed to stand. The best anti-freezing mixtures are composed of denatured alcohol and water, as follows:

Freezing Point	Alcohol	Water
10° above zero	20%	80%
5° above zero	30%	70%
20° below zero	40%	60%
35° below zero	50%	50%

Four ounces of glycerine added to these mixtures will retard the evaporation of the alcohol to some extent, but the alcohol will always evaporate more rapidly than the water and more should be added at frequent intervals to keep the mixture up to strength.

EXHAUST SYSTEM

The exhaust system includes the exhaust manifold, exhaust pipe, cutout valve and muffler.

The muffler consists of three concentric sheet metal drums which are perforated at opposite ends, so that the gas is compelled to travel full length of each drum in turn while it is expanding and losing its heat.

The cutout valve is a large poppet valve in the front muffler head which may be opened by the means of cutout plunger projecting through floor board in the driving compartment. When opened it allows the exhaust gases to escape directly into the atmosphere without passing through the muffler. This valve is provided principally to test the firing of the motor and it should not be used as a warning signal or for amusement. Its use will not increase the power of the motor.

The exhaust system requires no attention on the part of the driver. If, after long use, the muffler should become filled with soot, it can be cleaned by removing the rear head.

CLUTCH

A gasoline motor cannot be started under load, and for this reason the motor is connected to the driving mechanism by means of a friction clutch which can be released by pressing down on the clutch pedal.

The clutch consists of a leather faced cone which engages with the inside of the fly wheel rim. It is fastened to the clutch gear of the transmission in such a manner that it can be engaged or disconnected by sliding back and forth with the pedal. It is held in engagement by four springs, the tension of which can be adjusted to take up wear of the clutch facing by means of the nuts on the ends of the studs which fasten them to fly wheel.

In adjusting tension of clutch springs be careful to turn all adjusting nuts the same amount to prevent throwing clutch out of line.

The clutch springs and release spider are connected to the clutch sleeve by ball thrust bearings and the release action is made through a trunnion ring on thrust bearing on rear end of clutch sleeve. When clutch is released out of fly wheel, a small brake attached to the transmission case serves to keep the clutch from spinning so as not to get gear clash when shifting gears or speeds.

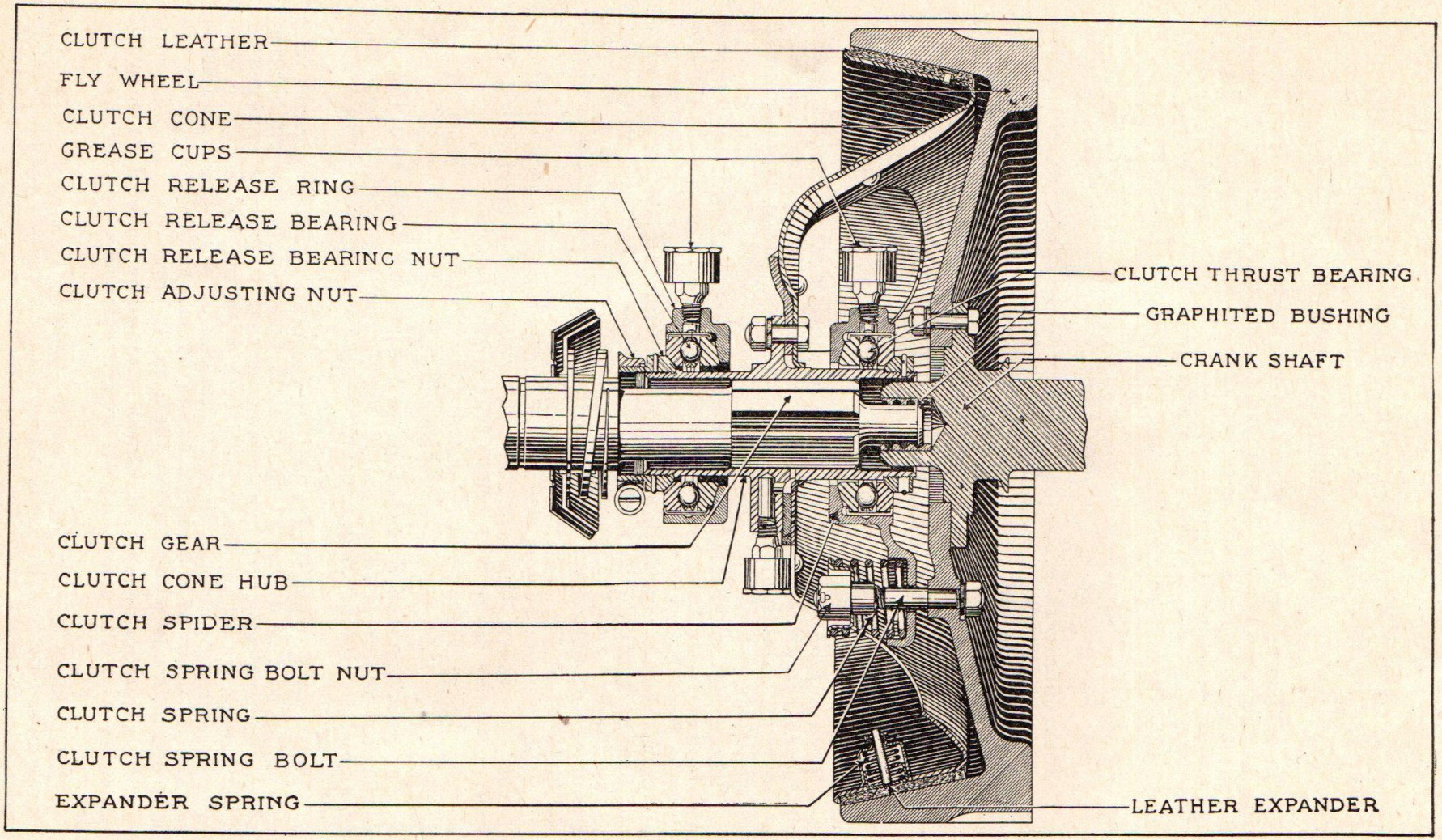

Plate 20
Clutch

Four small spring plungers located on cone rim, force leather facing out at these points and prevent "grabbing" when clutch is engaged. As leather wears, the washers can be removed from ends of expander plungers to allow them greater motion.

In operation, pressure on clutch pedal is transmitted by the connecting link and clutch release shaft to the yoke operating on trunnion ring, which pulls clutch out of engagement with fly wheel.

The clutch brake at this time keeps clutch from spinning, while shifting from one speed to another. When the motor is picking up its load the clutch will always slip a little before taking hold but unnecessary slipping of clutch should be avoided.

To secure smooth action, a frequent application of neat's foot oil to clutch leather is necessary. If clutch shows a tendency to slip, wash leather with gasoline or increase tension on clutch springs.

Do not allow oil or cup grease to get on clutch leather or the clutch will slip.

TRANSMISSION

The transmission system includes all those parts which transmit power from the motor to the rear wheels, but generally the transmission gearset alone is described by this term.

GEARSET

The gearset, or change speed gear, is made necessary on account of the fact that a gasoline motor develops power in proportion to its speed; the higher the speed, the greater the power output. On the other hand the car frequently requires more power at low speeds than at higher and at such times the gearset is used to change ratio between the speed of the motor and the speed of the rear wheels.

The change speed gears are carried on two shafts, the lower of which is known as the countershaft and carries the counter gears. while the upper or main shaft carries the sliding gears. The main shaft is mounted in a ball bearing at its rear end and runs in a bearing in the clutch gear at its forward end.

The counter shaft is stationary and the counter gears revolve. The reverse idler gear is mounted on a separate shaft to one side of countershaft and is in constant mesh with the counter gear. The sliding gears are mounted on the main shaft in such a manner that they can be moved along to engage with one or the other of the countergears.

The high and intermediate sliding gear is provided with internal teeth on its forward side so that it can be moved over the clutch gear to lock the main shaft and clutch gear together.

All the gears run in a constant bath of oil which also lubricates the bearing of the main shaft and clutch gear. An oil filler hole is provided on the side of the transmission case for introduction of new oil, and a drain plug at the rear end allows emptying and cleaning.

NEUTRAL POSITION

The clutch gear is directly connected to motor and consequently turns in the same direction but the countergear, being in constant mesh, is always revolving in opposite direction, but when control lever is in neutral position, neither of the sliding gears is in mesh with any other gear and therefore the main shaft does not turn.

FIRST SPEED POSITION

When the control lever is moved to the first speed position, the low and reverse sliding gear is slid into mesh with countergear

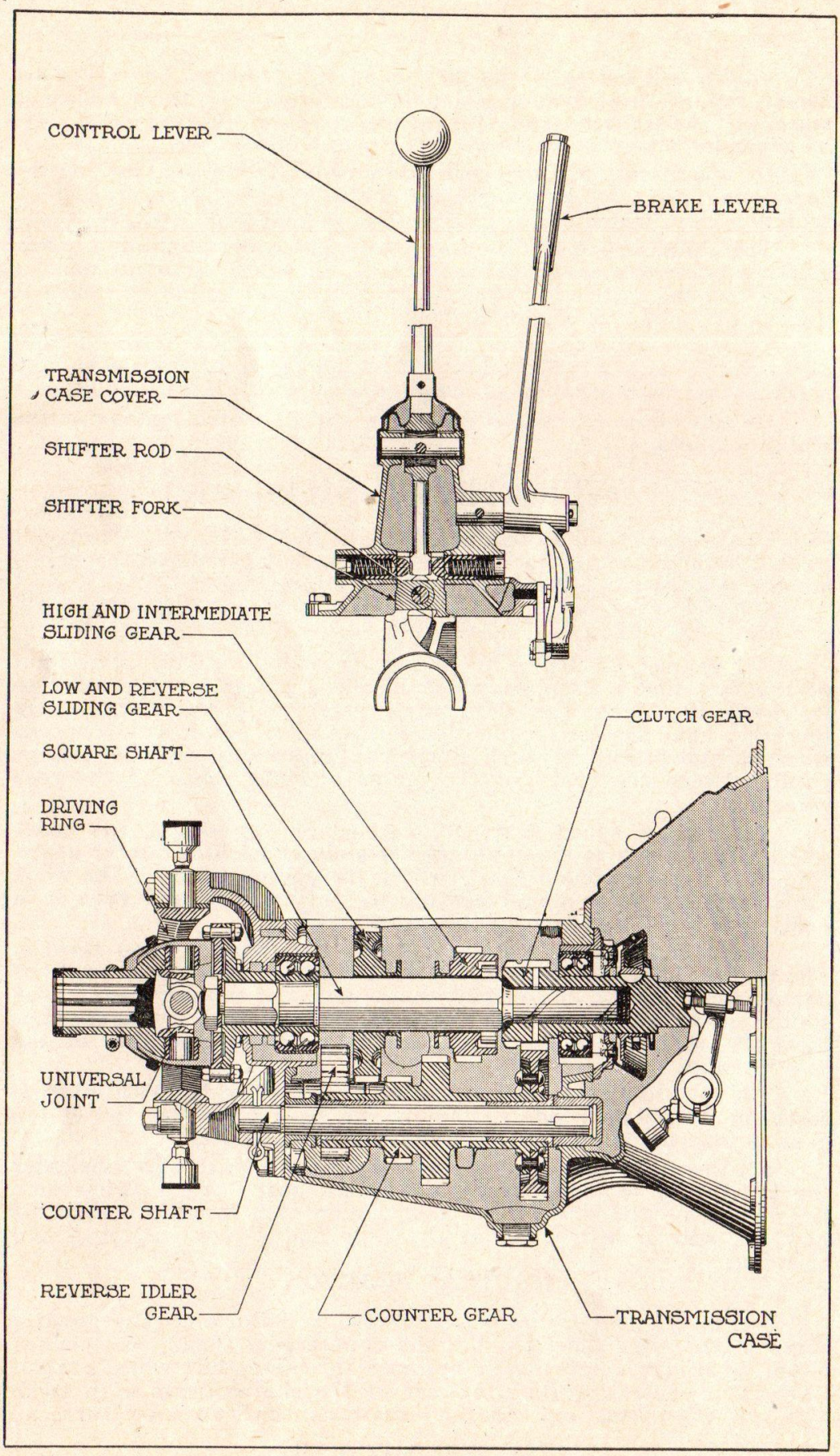

Plate 21

Transmission

and the car moves forward; but owing to the fact that the power is being transmitted from the smaller to larger gears, the rear wheels only make one revolution for every fourteen revolutions of the crankshaft.

SECOND SPEED POSITION

When the control lever is moved to the second speed position, the low and reverse sliding gear is drawn out of mesh with the countergear and the high and intermediate sliding gear is moved back into mesh with the intermediate speed counter gear. In this position the main shaft also turns in the same direction as the motor but the rear wheels now make one revolution for every seven revolutions of motor.

HIGH SPEED POSITION

When the control lever is moved to third, or high speed position, the high and intermediate sliding gear is moved forward on main shaft until the internal teeth slip over and engage the teeth of the clutch gear, locking the main shaft and clutch gear together, thus giving the motor a "direct drive" to the rear axle. The rear wheels now make one revolution for every four revolutions of the motor, which is the ratio of the driving gears in the rear axle.

REVERSE POSITION

Moving the control lever to the reverse position slides the low and reverse sliding gear back into mesh with the reverse idler gear which in turn meshes with countergear, the main shaft now turns in opposite direction, driving car backwards. In this position the rear wheels make one revolution to every eighteen revolutions of the crank shaft.

CONTROL LEVER

The sliding gears are moved back and forth on the main shaft by means of shifter forks which are carried on a rod in the transmission cover. The control lever is pivoted in the cover so that it may be swung to one side or the other. When swung to the right it picks up the fork which moves the low and reverse sliding gear, and when swung to the left it operates the high and intermediate sliding gear. Small spring plungers in the sides of the cover engage with slots in the shifter forks to hold the sliding gears in position.

UNIVERSAL JOINT

The transmission gearset is fastened solidly to the car frame, but the rear axle is hung on springs and must be free to follow the uneven surface of the road. In order to allow continuous transmission of power from the gearset to the rear wheels, the universal joint is interposed between them. It consists principally of a cross, the arms of which constitute four bearings. A yoke attached to the squared shaft of the gearset is connected to two of these bearings, while the splined yoke that slips on forward end of axle is connected to the other two. This joint is enclosed in a sheet metal housing and should be kept filled with soft cup grease, a plug being provided for that purpose.

REAR AXLE

The rear axle assembly includes the driving yoke propellor shaft, differential, axle shafts, brakes and wheels and constitutes the final element in the driving mechanism.

PROPELLOR SHAFT

The propellor shaft transmits the power from the universal

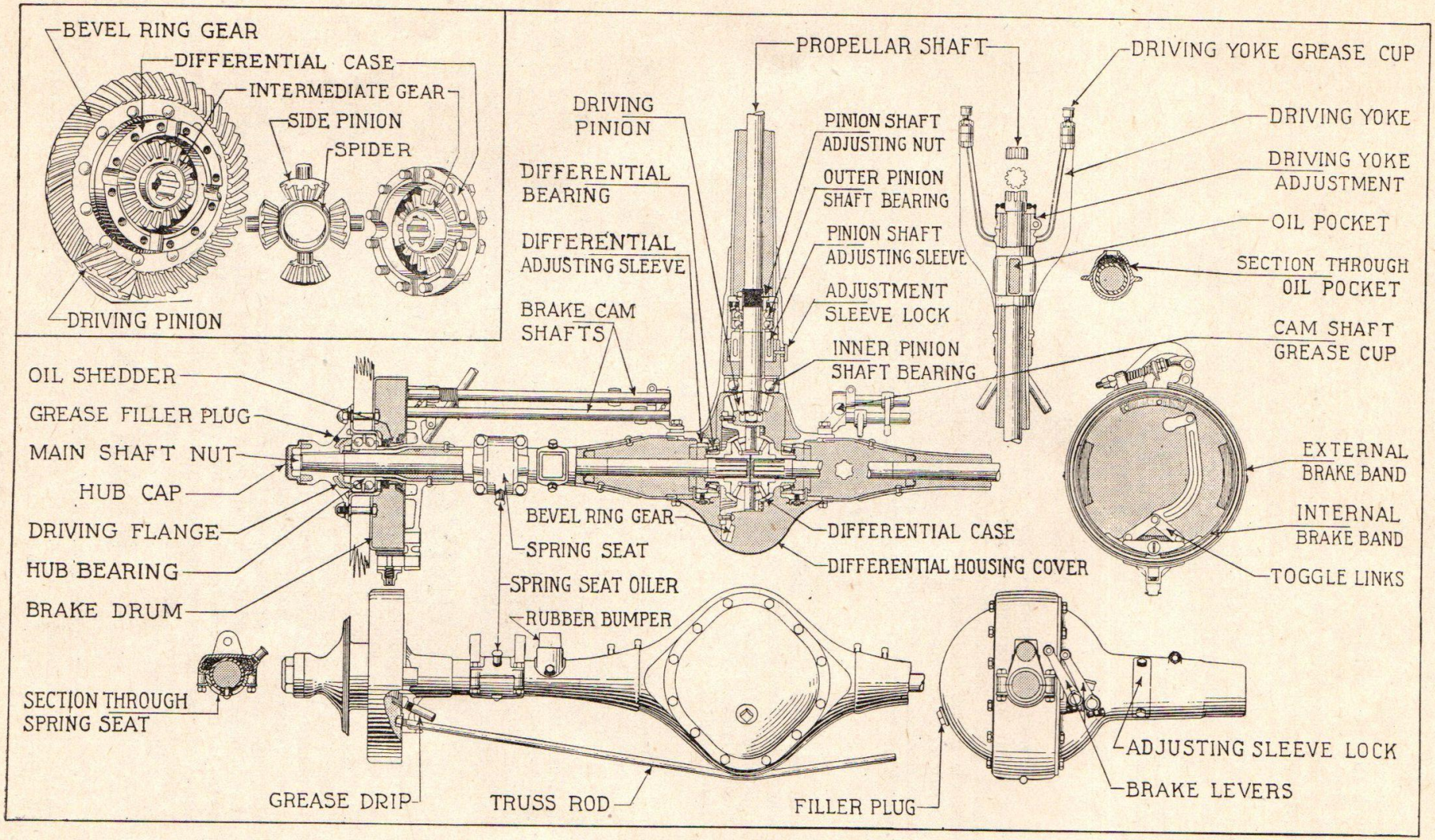

Plate 22
Rear Axle

joint to the driving gears of the differential. It is enclosed for its entire length in a steel tube carrying the driving yoke at its forward ring on the rear of transmission. The driving effort from the rear wheels is transmitted by the pinion tube through the transmission case to the frame of car. The pinion tube also absorbs the torque reaction of the bevel driving gears. At its rear end the propellor shaft is mounted on ball bearings and carries the driving pinion which meshes with the large ring gear on the differential.

The depth to which the pinion meshes with the teeth of the ring gear is adjustable and adjustment can be made by removing the cover plate on the right side of pinion flange and loosening the adjusting sleeve clamp screw on top. The sleeve which carries the outer bearing can then be turned to adjust the position of the pinion.

Adjustment of the pinion shaft should be made only by an experienced mechanic. In case of trouble, take car to the nearest Buick dealer or service station.

DIFFERENTIAL

The differential equalizes the amount of power applied to each of the rear wheels and allows one wheel to travel faster than the other wheel when the car is rounding a curve. It consists of a case mounted on roller bearings and held in position between adjustable ball thrust bearings. The large driving ring is attached to the outside of the case and meshes with the driving pinion. Inside of this case is a set of four bevel gears, all of which mesh with the side or intermediate pinions, into which the main axle shafts slide from the outside, they being connected to the rear wheels.

When the car is being driven straight ahead, the differential gears lock themselves and revolve with the motion of the case as a solid unit.

When the car turns a corner, the inside wheel slows down, retarding its main shaft and the intermediate gear to which it is connected in the differential, but since the motor continues to drive the differential case at the same speed, the side pinions begin to revolve on their shaft, thus increasing the speed of the outside wheel.

The position of the differential driving gear with respect to the driving pinion can be adjusted by removing the cover plate on axle housing and by turning adjusting sleeves which carry the bearings on which the differential is mounted. Both sleeves must be turned the same amount and in the same direction to prevent any end play in differential bearings.

Adjustments should be made by an experienced mechanic and in case of trouble, car should be taken to nearest Buick dealer or Service station.

The differential and its bearings run in a continual oil bath introduced through filler plug in the axle housing. The old oil should be drained off, differential washed out with gasoline and fresh oil introduced at least every 1000 miles.

WHEEL HUBS

Driving flanges are keyed to the outer ends of the axle shafts and bolted to the wheel hubs, which run on double row ball bearings mounted on the outer ends of the axle tubes, so that all the weight of the car is carried by the housing, and the axle shafts transmit only the driving effort. The hub bearings are lubricated with cup grease introduced through a filler plug hole in each hub. The hubs are also provided with felt washers and oil deflectors which throw off any oil which might work out from the differential and prevent

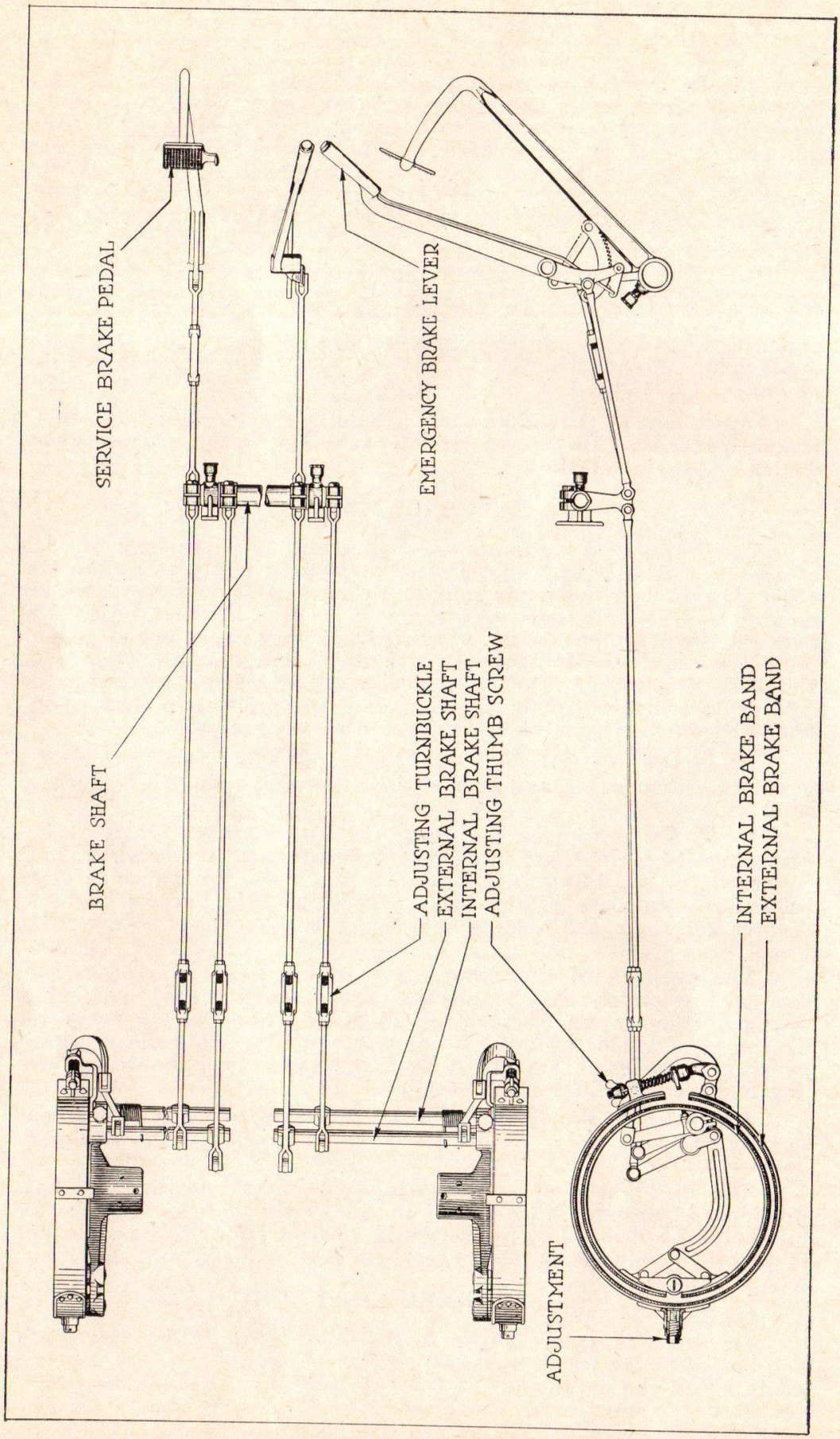

Plate 23
Brake Adjustments

it from getting on the brake. This surplus oil or grease is drained off through a drain tube which projects from the inner side of the brake flange underneath the axle tube, and care should be exercised to see that these tubes are always open and clean.

BRAKES

The brakes are supported by brake flanges attached to the main tubes of the axle and are operated by the brake cam shafts. They consist of steel bands lined with friction fabric and so arranged that they can be expanded or contracted against the circumference of the brake drums by means of a pedal or lever.

SERVICE BRAKES

The external or service brakes are operated by the right pedal in the driving compartment. Wear of the brake lining can be taken up by adjustment of the thumb screw and lock nuts at the opening in the band and by means of the adjusting screw in the anchor pin at the rear. The bands should be adjusted to allow a uniform clearance of 1/16 inch between the lining and the circumference of the drum, when the brakes are released. The throw of the brake levers and the position of the pedal can be adjusted by means of the turnbuckles in the brake rods.

See that brakes on both wheels are adjusted alike.

EMERGENCY BRAKES

The emergency brakes are the internal brakes and are operated by the hand brake lever in the driving compartment. They are seldom used and hence wear very slowly, but when adjustment is necessary, it can be made by shortening the rods with the turnbuckles.

DRIVING YOKE ADJUSTMENT

To take up end play of the driving yoke, adjust by loosening clamp screw and turning nut on forward end of the tube.

SPRING SEATS

The rear springs are attached to the rear axle by means of spring seats which are free to turn on the axle tube. They are provided with felt pads and oilers and should be filled with motor oil at least once every 1000 miles.

FRONT AXLE

The front wheels are mounted on steering knuckles pivoted to the front axle, so that they may be turned by the steering gear. Steering arms attached to the knuckles are connected by an adjustable tie rod, and the left steering arm has a third arm attached which connects to steering gear by means of a steering connecting rod.

TIE ROD ADJUSTMENT

The front wheels do not stand exactly square but are set at an angle which makes the car steer easily. This angle can be adjusted by means of the adjusting yokes on the tie rod. When properly adjusted, the wheels should measure ½ inch closer together at the front than the rear and 1 21/32 inch closer at the bottom than at the top.

FRONT HUBS

The front wheels run on cup and cone type ball bearings which are lubricated by being packed in grease. There are two rows of balls and the small cone on the outer end of the spindle is threaded

Plate 24
Front Axle

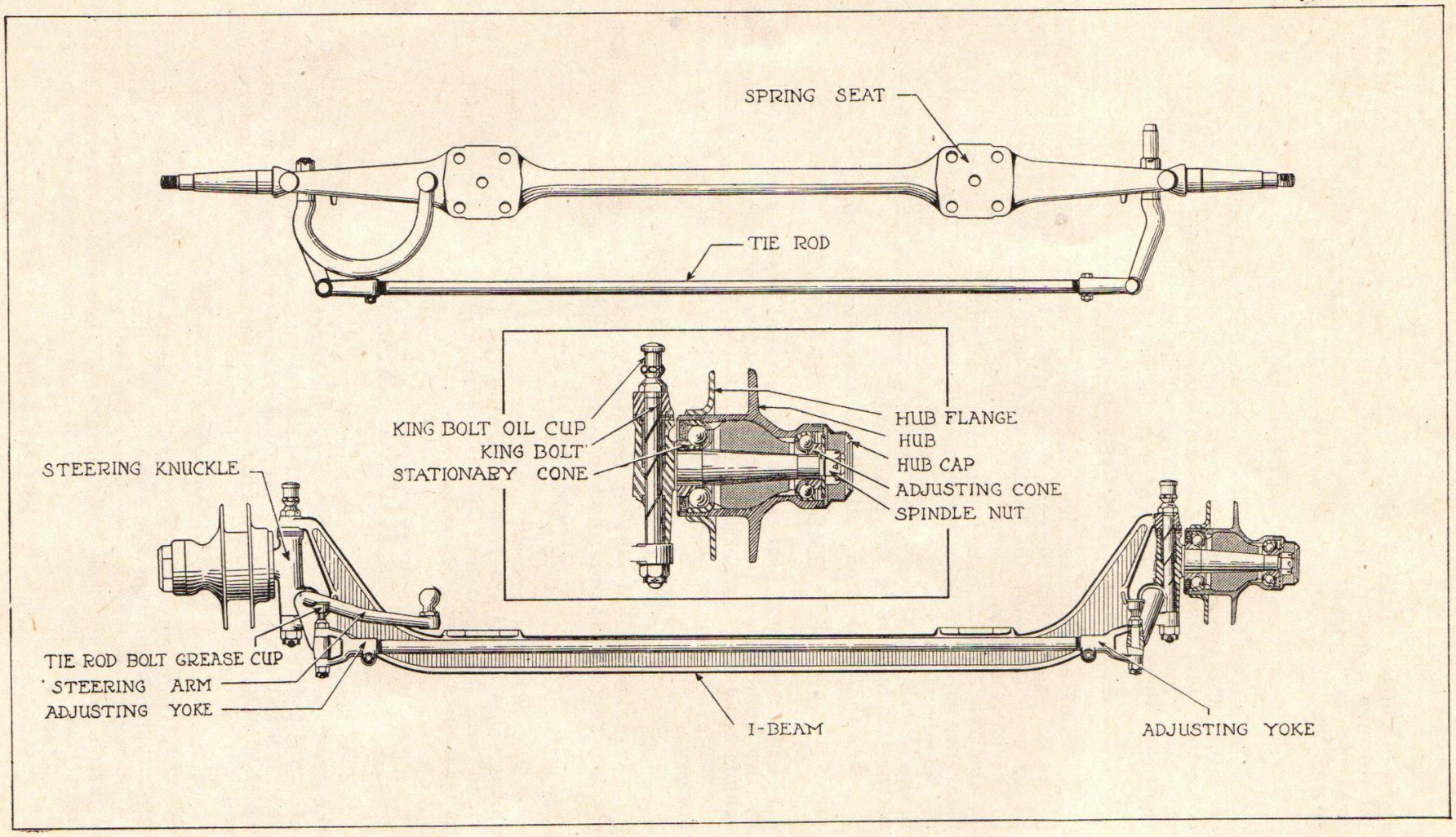

so that it can be adjusted to take up wear.

The bearings should be adjusted so that the wheels have no perceptible end play on the spindles, but run free and will stop with the tire valves at the bottom.

The bearings should be repacked with soft cup grease every 1,000 miles.

STEERING GEAR

The steering wheel is attached to a long tube, the lower end of which carries a double threaded worm or screw, engaging with two half nuts which slide up and down in guides in the steering gear housing. The threads on the steering screw are right and left hand, and one of the half nuts has a right hand thread; the other a left hand thread. When the steering wheel is turned, one of the half nuts rises in its guide while the other is forced downward. At their lower ends the half nuts carry hardened steel thrust blocks which push against rollers attached to the steering yoke, and by their motion the yoke is tilted in the housing, moving the steering pitman arm backwards and forward, and by means of the steering connecting rod, turning the front wheels to one side or the other.

The steering screw is provided with a ball thrust bearing and adjusting nut at its upper end for the purpose of taking up any backlash or lost motion in the steering wheel. For best results the steering wheel should have not over one inch of lost motion at wheel rim.

An oil plug is provided in the steering gear housing and the housing should be kept filled with heavy steam cylinder oil.

The sector bracket which carries the spark and throttle levers on top of the steering wheel is supported by a stationary tube inside the steering tube. The spark and throttle connections are operated by small concentric tubes enclosed in the stationary tube and carrying bevel gears at their lower ends. The horn button is located in the center of the steering wheel and is connected with the horn by a wire through the center of the inner tube.

SPRINGS

The springs are interposed between the axles and the frame to absorb road shocks before they can be transmitted to the remainder of the mechanism or to the passengers.

The front springs are attached to the frame at both ends and to the axle in the center, while the rear springs attach to the frame at their centers and front ends and carry the axle on their rear ends.

The springs are provided with grease cups at their ends and these should be given a turn or two every 100 miles and refilled with soft cup grease as often as necessary.

Squeaking springs can be overcome by jacking car up to release weight on springs and inserting heavy steam cylinder oil between spring leaves.

Broken springs are almost invariably caused by careless driving or loose spring clips. See that spring clip nuts are tight at all times.

WHEELS

Automobile wheels are of the artillery type, in which the spokes meet at the center and are bolted between the flanges of metal hubs. A steel felloe band is shrunk on the wooden felloes to carry the demountable rims.

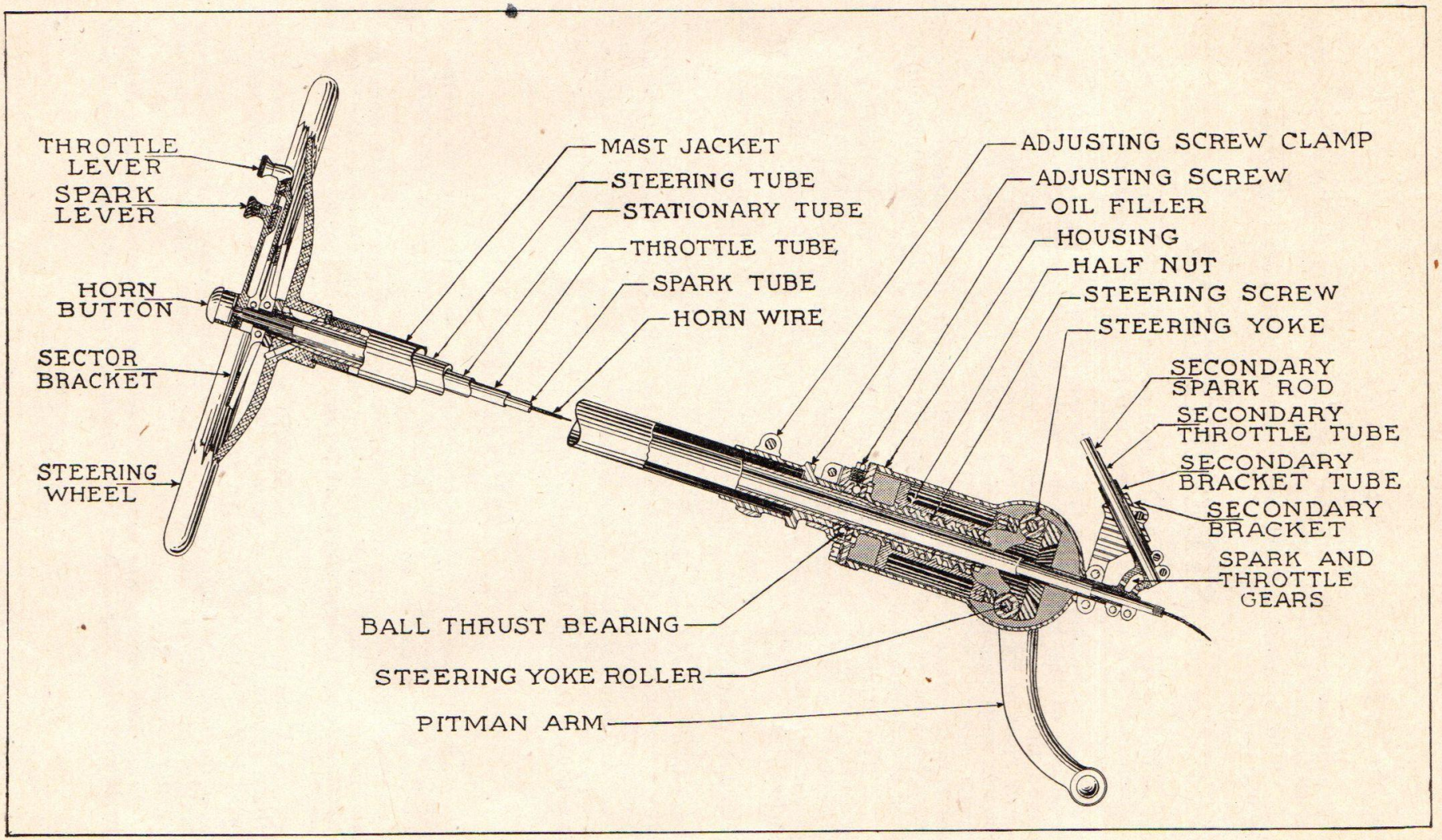

Plate 25
Steering Gear

RIMS

The demountable rims are the Bolted-On type and may be removed from the wheel with the tire by the following operations:

With the brace wrench, back out all bolts about ¾ inch, except the ones on either side of tire valve (Fig. 1), insert screw driver at right hand side of wedge, between rim and felloe band, (Fig. 2), and strike handle of screw driver to free the wedge. When free, turn wedge around, (Fig. 3), and tighten bolt to hold wedge in this position so it will not interfere with rim while dismounting.

To take rim out of tire, lay rim and tire flat, (Fig. 4), so that the end of cut in rim farthest from the valve stem is up. Be sure that there is no air pressure in tire before removing anchor plate, and beginning at end of rim which does not have the valve stem, insert sharp end of tire tool under bead of tire. Force tire tool down, by hand (Fig. 5), until end of rim is out of both beads of the tire. This will bring the two short sides of the rim together, thus reducing its circumference. Now, turn tire and rim completely over, (Fig. 6), and force tire tool between both beads of tire and rim, then, holding tire with the foot, (Fig. 7), grasp free end of rim and pull it out of the tire.

To replace tire or rim, lay rim flat on the ground with tire on top, (Fig. 8.) Raise end of rim which is drilled for valve stem, and after valve stem has been inserted, put both beads of tire entirely into the end of rim that has been raised, making sure that other end of rim is under both beads of the tire. After the beads of the tire have been properly started, insert them all the way around, leaving other end of rim to be put in last. If tire is too stiff to force on by hand, use tire tool (Fig. 9).

Replace anchor plate and valve cap before inflating tire.

TIRES

Tires are of the standard straight side type, into which two rings of braided steel wire are moulded to form the beads which hold the tire on the rim.

Punctures cannot be avoided, but a well inflated tire is less likely to pick up nails than a soft one. Bruises, cuts, and sand boils can generally be avoided by careful driving, but should be repaired as soon as they appear. Gasoline and oil should be kept away from the tires as they tend to soften the rubber. If car is to be out of service any length of time, remove tires, deflate to a few pounds pressure and store in a cool, dark place. Three-fourths of all tire trouble is due to a lack of pressure; therefore, a gauge should be used to determine the pressure and tire should be kept inflated to 20 pounds pressure per inch of width.

BODY

The body is the passenger carrying part of the car and consists principally of an oak frame covered with a steel shell, and into which the seats and cushions are fitted. It is bolted to the frame of the car, and to prevent squeaks, the body bolts should be kept tight. Aside from washing and cleaning, the body will require no further attention.

WASHING

When washing the car, soak the dirt off with a gentle stream of cold water. Do not use a nozzle. Do not rub. Mud is much more easily removed before it gets dry and hard. Grease can be removed with soap suds and a soft sponge. Rub as little as possible and use a neutral soap. Rinse thoroughly with cold water, dry and polish with a piece of clean soft chamois skin.

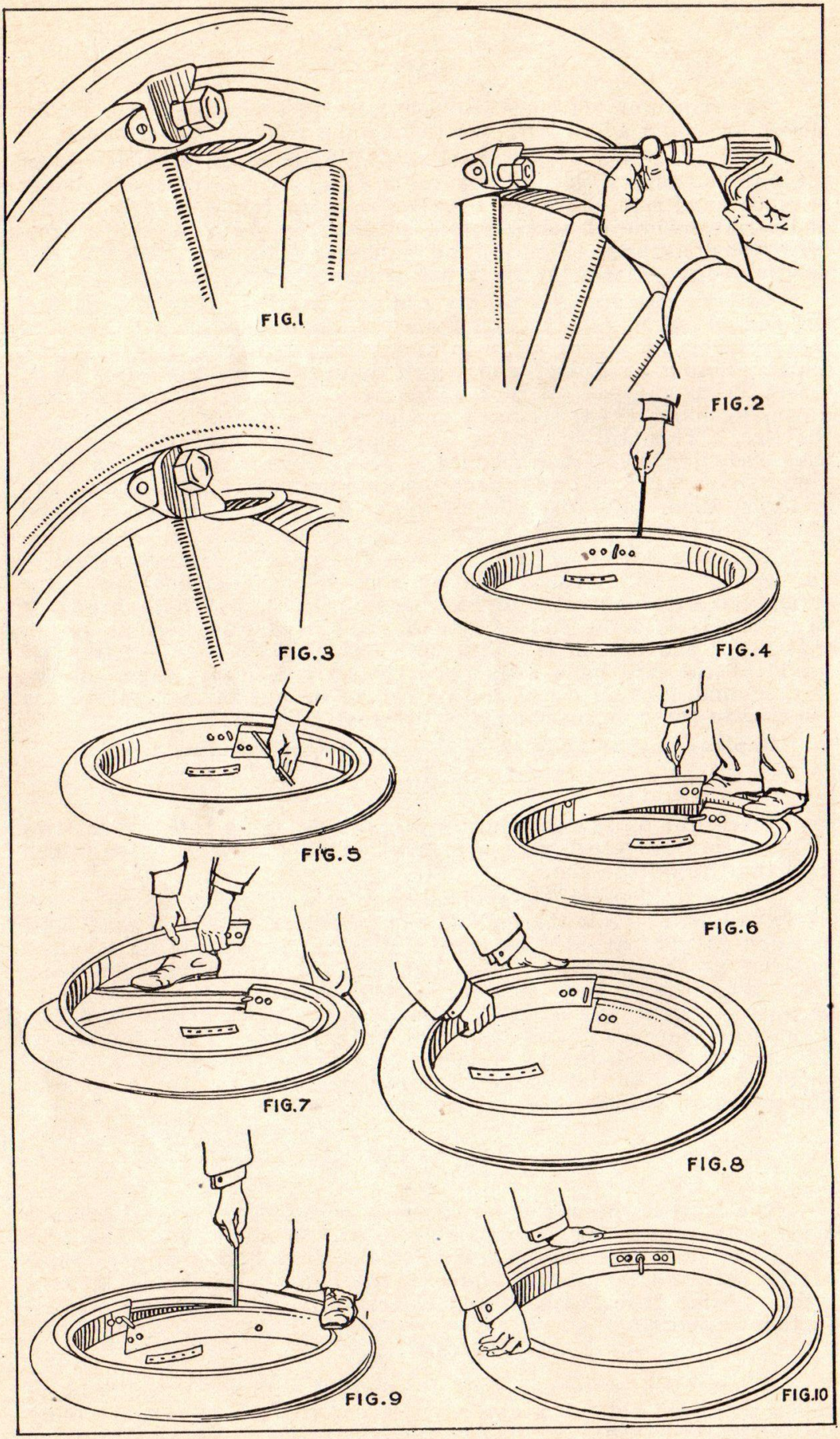

Plate 26

Operation of Demountable Rims

TOP

The top should never be folded until it is thoroughly cleaned and dried. Dust on the outside can be removed by washing with clear cold water and a neutral soap. Be sure to rinse thoroughly with clear water or clean with a clean moist cloth. The inside should be dusted out with a stiff whisk broom.

When folding be careful to see that the cloth is not pinched between any of the bow spacers and sockets. Always slip dust cover over top when it is folded to keep out dust and dirt.

WINDSHIELD

The windshield is adjustable for rain vision and ventilation by swinging the glass in or out. Friction stops hold the glass in any position and may be tightened by turning the small acorn nuts on the posts. The large nuts which fasten the windshield posts to the cowl bracket should be kept tight at all times.

INDEX

	Page
Adding water	46
Adjusting of Bearings	27
Adjustment of Carburetor	32
Adjusting of Push Rods	25
Adjusting of Spark Plugs	41
Adjusting of Timing Contacts	41
Adjustment of Tie Rod	58
Anti-Freezing Mixture	49
Assembling of Pistons	27
Battery Depots, Exide	45
Battery Guarantee	45
Battery Service	45
Battery, Storage	45
Bearing, adjustment of	27
Body	61
Brakes	58
Brakes, Service	58
Buick Branches and Distributors	5
Car, How to Start	11
Car, How to Stop	12
Carbon, Removing of	27
Care of Distributor Head	41
Carburetor	29
Carburetor, Adjustment of	32
Circuit Breaker	45
Coasting	13
Condenser	43
Construction, Battery	45
Construction, Generator	35
Control Lever	53
Cooling System	47
Clutch	49
Combination Switch	43
Delco System, The	35
Differential	55
Distributor	39
Distributor Head, Care of	41
Draining	47
Driving	12
Driving Yoke Adjustment	58
Emergency Brakes	58
Emergency Stops	12
Exhaust System	49
Exide Battery Depots	45
First Speed Position	51
Front Axle	58
Front Hubs	58
Fuel System	29
Gearset	51
Grinding Valves	25
Guarantee	7
Hand Cranking	9
Handling the Spark	12
High Speed Position	53
High Speed	11
How the Motor Works	23
Hydrometer, The	46
Ignition Coil	41
Ignition, Timing of	43
Inserting Piston Rings	27
Introduction	3
Keeping the motor clean	27
License Application	7
Lights, Use of	15
Low Speed	11
Lubrication, Car	17
Lubrication, Generator	39
Lubricants	21
Motor Generator	35
Motor, How to Start	9
Motor, How to Stop	13
Motor, How It Works	23
Motor, Racing of	13
Motor Lubricating System	27
Neutral Position	51
Operation, Car	9
Operation, Generator	37
Oil Circulating Pump	29
Overhauling	19
Pistons, assembling of	27
Piston Rings, Inserting of	27
Power Plant	21
Propeller Shaft	53
Push Rods, Adjusting of	25
Racing the Motor	13
Radiator	47
Radiator Fan	47
Rear Axle	53
Regulator, Generator	37
Removing Carbon	27
Resistance Unit	43
Reverse Position	53
Rims	61
Rules of the Road	13
Running Positions	9
Second Speed Position	53
Second Speed	11
Service Brakes	58
Shifting Down	11
Shifting gears	11
Sight Feed	29
Skidding	13
Spark Plugs, Adjustment of	41
Speeding	13
Springs	59
Spring Seats	58
Starting on a Grade	13
Steering	12
Steering Gear	59
Storage Battery	45
Storage Battery, Action of	46
Switch, combination	43
The Delco System	35
The Hydrometer	46
Tires	61
Tie Rod Adjustments	58
Timing the Ignition	43
Timing the Valves	25
Transmission	51
Top	63
To Raise the Top	15
To Reverse	12
To Start the Car	11
To Start the Motor	9
To Stop the Car	12
To Stop the Motor	13
Use of Lights	15
Universal Joint	53
Valves, How to Grind	25
Valves, Timing of	25
Vacuum System	29
Washing Body	61
Watch the Instruments	15
Water Pump	47
Wheels	59
Wheel Hubs	55
Windshield	63