1958

Rambler

owner's manual

Read Your Owner's Manual . . .

1958 REFERENCE DATA RECORD

Serial No. Oil - 64635 } Q Stat. £20 NR.

Body No. Filter - 64635 }

Model No. _____

Trim No. _____

Paint No. _____

(*Above information located on right hand wheelhouse panel*)

Engine Serial No. _____

(6-*Cyl.*: *Upper left front corner of block*)

(*V*-8: *Lower left front corner of block, also on generator bracket*)

Body Style _____

Taxable Horsepower: 6-Cyl. _____ 23.44

V-8—108″ Wheelbase _____ 39.2

V-8—117″ Wheelbase _____ 51.2

Key No.—Ignition and Door _____

Tailgate or Trunk, Glove Box _____

Cost of License Plates _____

License Plate No. _____

Purchase Date _____

IMPORTANT: *Be sure to read Break-In instructions on page 29 before operating your new car.*

Your key to motoring pleasure . . .

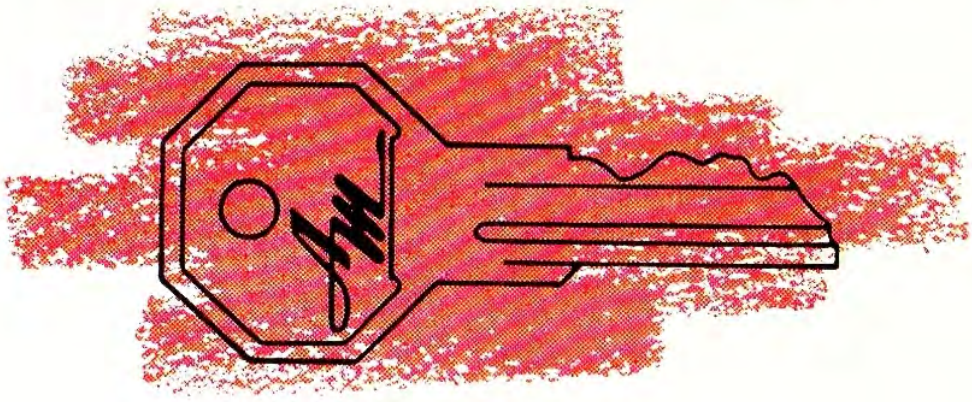

We are both proud and happy that you've selected our product for your new car, and we are confident that a new realm of motoring pleasure will be experienced in all of the many miles ahead. Smart styling, compact design, advanced construction, and roomy interiors combined with peak performance and top fuel economy are among the many notable features engineered for your motoring requirements.

Your new American Motors car deserves the care and consideration that you would give any prized possession. This manual contains many hints on driving and maintenance that will increase reliability and add to your car's life. Use this information to assure efficient, economical operation and add to your safety and comfort.

When service is required, see your Authorized Dealer for he is interested in you and your new car. Your dealer knows our product best and he'll be glad to assist you in any way he can. Your dealer has factory trained personnel, factory approved equipment, parts and accessories insuring the best possible service for top performance.

American Motors Corporation
"Great Cars Since 1902"

Operation

1. ***Ignition Switch*** • The octagonal shaped ignition switch key also operates door locks. Place gear lever or push button (automatic) in Neutral (N) before starting engine. Turn key to extreme right to start engine. Spring tension will return key to normal position. Turn key to left to allow accessory operation without running engine.

2. ***Instruments*** • "Cluster" group contains speedometer, fuel and temperature gauges. Ruby lights indicate generator "charge," low "oil pressure," and "high beam." Green arrows indicate directional signal operation.

3. ***Cigarette Lighter*** • To operate, push in—it automatically pops out when ready. (Read Tag)

4. ***Electric Wound Clock*** • To re-set hands, pull out knob and turn. After hands are set, release knob. Should clock run fast or slow, re-set to correct time. The self-regulating mechanism will automatically change the clock speed proportionately. (Read Tag)

5. ***Radio Tuning Control*** • The push buttons provide simplified pre-selected station tuning. Tune stations manually with right hand knob. Tune carefully until exactly on the station; poor tone quality will result if tuned improperly. Volume control is the inner left knob; the outer knob is tone control. See Page 19.

Operation

6 ***Radio "Off" Control*** • The push button marked "OFF" operates radio switch. Push "in" to turn off radio. Push in any of the other five buttons to turn radio on. Ignition key must be either in accessory or operating position.

7 ***Parking Brake*** • "Step-On" operated to holding position. At the same time depress foot brake to assist setting the parking brake and maintain the applied pressure until brake holds. Push "Brake Release" lever slightly upward to release brakes.

Models equipped with handle type are operated by pulling handle—at the same time depress the foot brake to assist setting the parking brake; release by turning to the left.

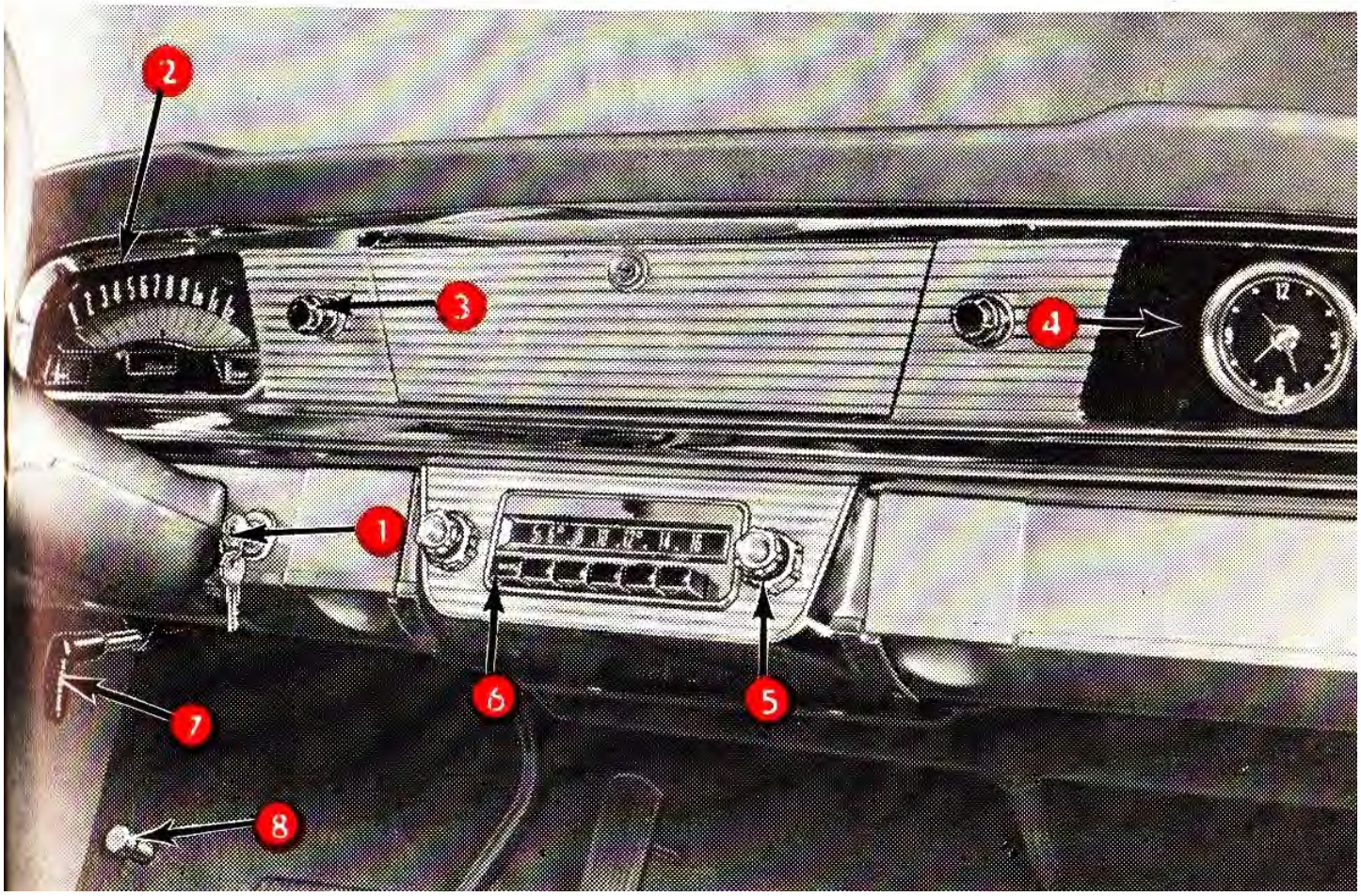

Operation

8 ***Headlight Dimmer Switch*** • The foot-operated switch controls high and low-beam position. Ruby indicator light in instrument cluster indicates when headlights are on "high-beam."

9 ***Headlight Switch*** • Pull out to first position for parking lights; to second position for headlights. Rotate the knob to vary instrument light brilliance.

10 ***Windshield Wipers*** • Turn control to the left to obtain the wiper speed desired. If equipped with windshield washers, a foot-operated pump control is located near headlight dimmer.

11 ***Defroster Control*** •

12 ***Fan Control*** •

13 ***Heater Control*** •

14 ***Vent Control*** •

15 ***Push-Button Selector Console*** • Shift selector for automatic transmission equipped cars, Page 9 outlines operation instructions.

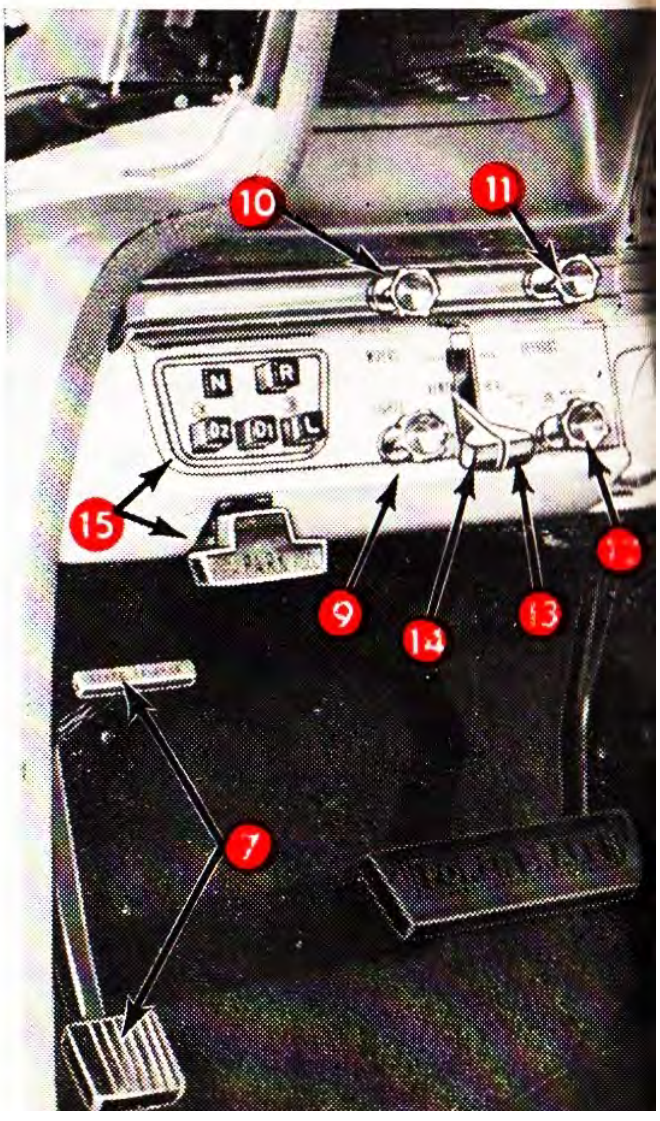

Operation

WEATHER EYE

Heater Operation • Move VENT lever 14 down to full "Open." For normal air circulation, push in FAN knob 12 to "OFF." For greater air circulation pull FAN knob out; rotate clockwise to high (H) or low (L) blower speed.

Move HEAT lever 13 up towards "High" for thermostatically controlled heat. When the HEAT lever is moved vertically, it progressively increases the degree of heat. When in full "High" there is no thermostatic heat control, and when in full "OFF," heat is shut off completely.

Pull DEFROSTER knob 11 out for windshield defrosting. Pull FAN knob out and rotate to H or L.

Fresh Air Ventilation • Move VENT lever 14 down to full "OPEN."

For normal air circulation push FAN knob in 12 to "OFF." For greater air circulation, pull FAN knob out; rotate clockwise to high (H) or low (L) blower speed.

Move HEAT lever 13 down to full "OFF."

Operation

ALL-SEASON AIR CONDITIONING

Air Conditioning • Start the engine before operating the air conditioning system to reduce the battery load and provide easier starting. Open the windows for a minute when starting to drive to expel the accumulated warm air when parked in the sun, then close ALL windows.

Move HEAT lever 13 down to full "OFF."

Push VENT lever 14 up to full "CLOSE."

NOTE: To control degree of cool air, push VENT lever partially down as desired. This will increase air intake, thereby increasing inside air temperatures.

Push in the FAN knob 12 and rotate counterclockwise to high (H) or low (L) blower speed to start air conditioner.

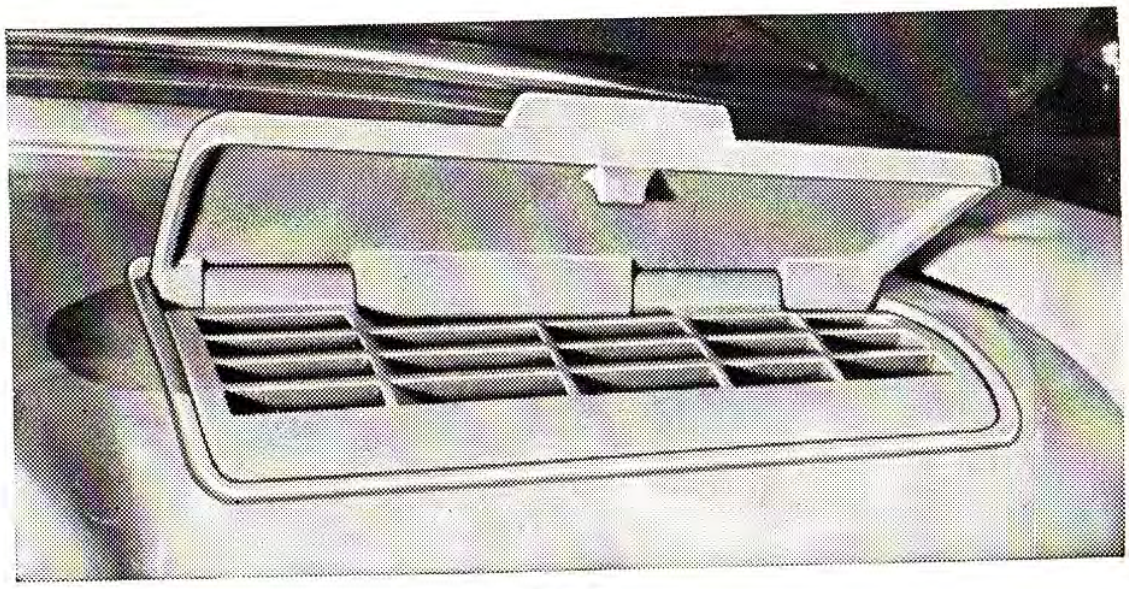

Operation

Open two air discharge grilles on instrument panel. The air discharge grilles may be adjusted independently directing the air flow as desired. A partially open position provides maximum front seat passenger cooling while a fully open position is best suited for both front and rear overall cooling.

The sun visors may also be used to control the distribution of the air. With the sun visors fully up, air is circulated more readily toward the rear. Tilting the visors down will direct the air toward the front seat area. When using the visors for control of the air flow, the air-discharge deflectors must be in the full open position.

During the winter, operating the air conditioner periodically for short intervals will assure oil circulation and lubrication to protect working parts. In spring, have your dealer inspect your air conditioner and its operation. Except for this inspection, there is no other service required.

Station Wagon • To increase the cargo compartment space, the rear seat-back folds forward and lays flat on the rear seat cushion (Fig. 1).

It is held in place by two straps (Fig. 2) fastened to the seat-back anchor pins. The anchor strap is stored by snap fasteners to the front of the seat base. Remove strap from fasteners, lay seat-back on seat cushion. Press down on seat-back. Hook

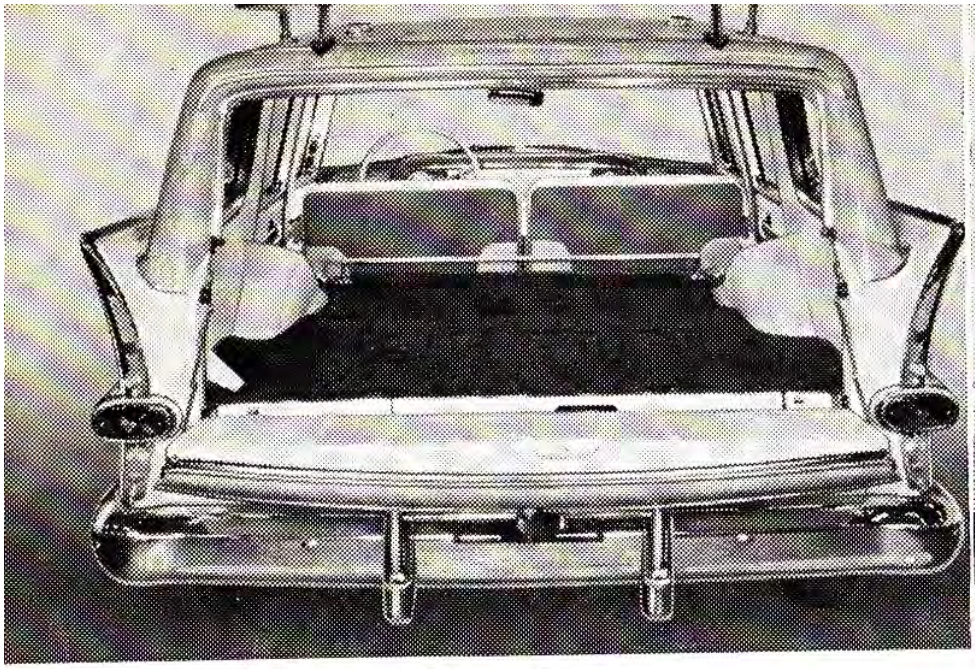

Figure 1



Figure 2

strap on anchor pins and then snap fastener on the seat base. The robe-rail acts as a cargo stop.

The tailgate window is lowered by means of an external key-locked crank handle. It is necessary to lower the window completely to open the tailgate. The window may be locked with tailgate and glove box key at any lowered position when the crank handle is in a vertical position with the knob at the bottom.

The spare tire and bumper jack are stored under the rear cargo floor panel which is removable for easy access. The panel is secured with a turn fastener at the rear.

Door Locks • The front doors may be locked from the inside by turning the handles down. The rear doors employ a lock button to prevent opening from either inside or outside. When locking the car, the last door must be locked from the outside with the door-ignition key.

Operation

Trunk or Tailgate and Glove Compartment Locks • The round handle key fits the glove compartment, trunk or tailgate locks. To open the trunk, insert and turn key—the trunk lid will partially open. Unlock the tailgate window crank handle to permit lowering the tailgate window and tailgate. Release tailgate latch to lower tailgate. The tailgate incorporates spring loaded cables to assist in opening and closing.

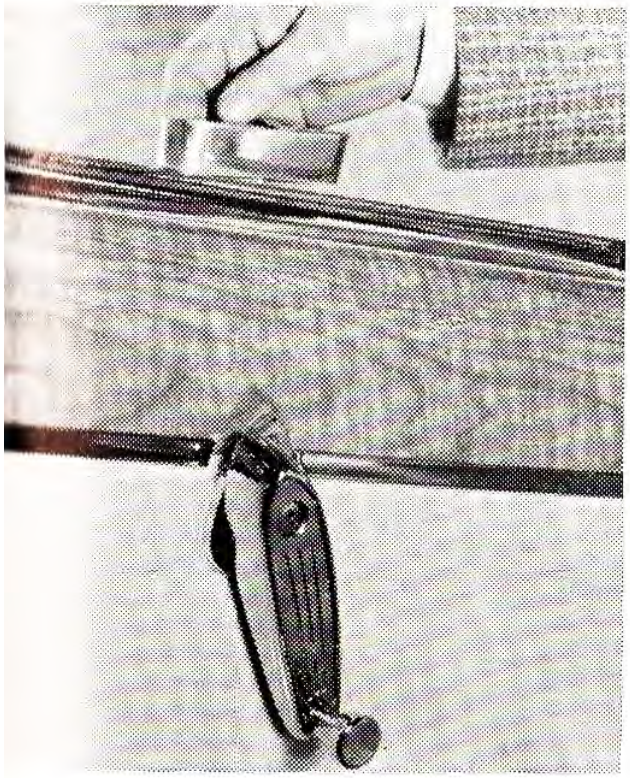

Hood • The hood release and safety catch lever is located between the grille and hood opening at the center. To open, hold lever up and lift hood. To close, lower hood gently and press down firmly to lock. Do not hold lever while closing.

FLASH-O-MATIC TRANSMISSION

The push-button selector console is located to the left on the instrument panel.

Safety factor built-in protection assures against careless operation of the selector buttons. For example, when "Park" is engaged, the other selector buttons are inoperable. Before "Park" can be used, the Neutral (N) button must be pushed in.

Operation

N—Neutral and Starting

R—Reverse

D[2]—2nd Gear Start Drive Range

D[1]—Complete Drive Range

L—Low Drive Range, 1st Gear

PARK—Internal Transmission Lock for Parking



NOTE: At no time should "Park" be engaged when car is moving. Internal damage to transmission would result.

A hydraulic inter-lock automatically prevents use of Reverse (R) above 10 MPH. Should the button be inadvertently depressed at speeds above this, the transmission will shift to low range and as car speed is materially reduced as a result to below 10 MPH, the transmission will then automatically shift into reverse.

Starting the Engine • The engine can be started with the key start when the Neutral (N) button is pushed in. Starting the engine while parked on an incline—if the "Park" lever has been pushed in previously, merely start engine with key. Release "Park" and select the desired drive position.

Operating in the Driving Ranges • Selector button "D[1]" provides a complete driving range with a 1st gear start for increased power and acceleration

in congested traffic or mountainous terrain. The "D2" selector button provides a 2nd gear start thereby reducing engine speed and improving fuel economy during initial acceleration. The "D1" and "D2" buttons can be moved from one position to the other when traveling at any car speed.

Operating in Low (L) Range • The low (L) range is provided for use in deep sand or snow, ascending or descending steep grades, or where traffic conditions require first gear.

The change from either of the two "D" range positions to low (L) range is made by depressing the "L" button. Release the accelerator pedal when moving the button to "L." This change can be made at any car speed. When the selector button is moved to "L" range above 20 MPH, an immediate downshift to second speed will occur. A shift into first gear will follow when speed is reduced below 20 MPH.

CAUTION: The change from either of the two "D" positions to "L" should only be made on dry roads when traction is good. It is not recommended to change to "L" on slippery roads since this change could induce a skid. On slippery roads, safety demands that the car speed be reduced by judicious use of your brakes.

Forced Downshift • To obtain extra power for

acceleration when driving in either of the two "D" ranges, depress accelerator pedal completely.

The Flash-O-Matic will downshift to second speed when driving in "D2" range at speeds less than 56 MPH. A downshift to first speed will occur when driving in "D1" range at less than 18 MPH.

Operating in Reverse • Avoid engaging reverse at speeds above 10 MPH. It is not necessary to bring the car to a complete stop before engaging reverse, simply push "R" selector button. Alternately pushing "L" (or "D1") and "R" selector buttons with light accelerator pedal pressure permits rocking the car when required to get out of snow, mud, or sand.

Parking • Neutral (N) button must be pushed in before the "Park" actuator lever can be engaged. Push in completely to engage "Park." This lever engages an internal transmission lock for parking.

NOTE: At no time should "Park" be engaged when car is moving. Internal damage to transmission would result.

Holding Car on Hills • It is possible to hold the car stationary, for limited periods of time only, on slight upgrades by depressing accelerator pedal slightly with "D1," "D2," or "L" ranges. For longer periods or on steep hills, this practice is not recommended.

Operation

Pushing to Start Engine • Push car in Neutral (N) with "Park" pulled out until 30 MPH or more is reached, turn on ignition, then push "D1" button (not "L"). Under these conditions, the engine will be engaged in gear and ordinarily will start.

Caution • If it becomes necessary to tow or push the car for distances greater than necessary to start a normally operating engine, a speed of 15 to 20 MPH should not be exceeded. Towing or pushing under these conditions will be satisfactory assuming the automatic transmission has been operating satisfactorily AND assuming the car mileage is in excess of 1000. If transmission has not been operating properly, the car should be towed ONLY with rear wheels lifted off the ground.

Care and Maintenance • Check transmission fluid level every 1,000 miles. Drain and refill the Flash-O-Matic transmission every 15,000 miles.

Fluid Level Check Procedure • Engage "Park" lever after pushing "N" button in and set park brake with car on a level surface. To warm fluid, run engine until temperature is normal, and let engine idle. Disengage "Park," push in "R," then to "D2" and check level. Do not overfill. The filler cap dipstick is located in the engine compartment on the right rear side.

Operation

Use fluid specially provided for automatic transmissions. Your dealer has American Motors approved fluid, designated AQ-ATF-401. In addition, several oil companies are marketing approved fluid. Avoid using non-authorized oils which may cause trouble. It is wise to check the sealed cans for the approved symbol "AQ-ATF." This symbol is embossed in the can itself, and means "Armour Qualification—Automatic Transmission Fluid, Type A."

Idling and Creeping • As the engine breaks in and friction decreases, the idle speed tends to increase. At these higher idle speeds, the car will tend to "creep" because of the increased power transmitted by the fluid coupling. It may be necessary to have your dealer adjust the idle speed to overcome creeping tendencies, until engine friction stabilizes.

The correct idle speed to minimize creeping and stalling is 475 RPM (500 with air conditioning on) for Six cylinder models and 475 RPM for V-8 models.

Coasting—A Caution • Do not coast with the transmission in Neutral (N). Safer driving results from always having the engine "in gear." Damage to the transmission may result when coasting.

AUTOMATIC OVERDRIVE

To place the overdrive in operation, push the control (at right of steering column) to the "in" posi-

tion. This can be done at any speed without releasing the clutch. To lock out the overdrive, however, the car should preferably be standing still. It is possible to make this change with the car in motion. Depress accelerator pedal fully (to shift into conventional third if above 28 MPH) and pull out the control knob. Below 28 MPH, the engine must be driving car—NOT coasting—when this shift is made.

With the overdrive control "in" and car moving at 28 MPH or more, the shift is made by momentarily releasing the accelerator. On slowing down, when the accelerator is released, at about 25 MPH, the drive changes automatically from overdrive to "third."

When descending steep hills, the overdrive should be locked out—pull the control "out" as described. Then in normal third gear, the resulting engine braking when accelerator pedal is released saves wear and overheating of brakes. Some prefer to drive in traffic with overdrive locked out, to provide engine braking on normal decelerations.

If your car must be pushed or towed to start the engine, first pull overdrive control "out."

Automatic Overtake • When operating in overdrive, one simple operation permits return to conventional third speed with added power. This is

accomplished by depressing the accelerator to the full limit of its travel which operates electrical controls to effect the shift to third. When pedal is released, the shift to overdrive is made automatically if car speed is above 28 MPH.

POWER BRAKES

Power Brakes require far less pedal effort and permit quicker applications. The system employs a booster operating on engine vacuum. In event of engine stalling, about two brake applications remain before vacuum reserve is exhausted—added pedal effort is then required. To park on steep grades, set park brake with foot brake assistance prior to stopping engine. Do not release park brake until engine is started. Check fluid reservoir every 1,000 miles.

POWER STEERING

Far less effort is required to park and steer with American Motors direct-acting, linkage-type Power Steering. Should power fail, positive control can be maintained with increased steering effort. Check fluid reservoir every 1,000 miles.

POWER-LIFT WINDOWS

This power-assist equipment enables each window to be operated by its own electric motor. An individual control button is provided for each window,

while a complete set of four buttons on the driver's door enables remote control of all windows. Pressing a button up raises the window—pressing down lowers it. To operate windows, ignition must be "on" or in the accessory position.

POWR-LOK DIFFERENTIAL

The "Powr-Lok" differential (optional equipment) is designed to give positive tractive drive to both rear wheels at all times, whereas one wheel would spin in a conventional type differential whenever snow, ice, mud, or rough gravel roads are encountered. The positive drive feature is possible by the cone clutches and friction drive plates in the differential assembly. The tractive drive from the wheel that is spinning is equalized and transferred to the wheel that is not spinning, virtually locking both axles in positive drive.

Completely automatic, requiring no driver attention, this provides a new measure of added control and safety under all driving conditions.

CAUTION • Cars equipped with "Powr-Lok" should not have the rear wheels balanced with an "on the car" type balancer. "Off the car" type balancers are recommended. The locking feature will cause the car to drive-off or throw the "chocks" used with this type balancer causing damage to the car or seriously injuring the operator.

Operation

AIR COIL RIDE

The optional air coil ride provides a variable rate springing system in which the action of the spring varies in accordance with the load in the vehicle and the road irregularities encountered by the wheels.

The air coil, which consists of air springs operating inside and in conjunction with the rear coil springs, maintains a constant riding height, provides better control on severe bumps, and improves stability when cornering.

Owner Maintenance Instructions • Drain water caused by condensation due to temperature changes from supply tank, under left front fender, every 1000 miles at drain valve by depressing valve stem.

CAUTION • Because of high pressures, do not use tire gauge on supply tank fitting.

The car may be jacked up or raised on a hoist in the manner of a conventional car.

Towing the car without engine running is permissible in an emergency, although air will exhaust from system.

If necessary to tow car with a service truck, the hoist should be used at rear of car; if used at front, maintain level to prevent rear from dragging.

The air coil suspension maintains the vehicle at a constant level regardless of load; therefore, reasonable care should be exercised to avoid excessive

loads beyond the capacity of the wheels, bearings, tires, and other chassis components.

OIL FILTER

A full-flow oil filter is mounted on the lower rear left side of the cylinder block on V-8 models and is accessible from below the car. Standard on 117″ wheel base, optional on all others.

On Six cylinder models, a partial-flow oil filter is mounted on the upper left front corner of the engine.

The throw-away filter unit can be removed from the adapter by hand. The replacement unit is turned on until the gasket contacts the seat and then tightened an additional half-turn.

The oil filter unit should be changed at the initial drain period, and every 4,000 miles thereafter. An additional quart of oil is required at this time.

RADIO

The push button transistor-powered radio is designed to give endless moments of pleasurable driving. On certain models, the speaker is located on the right side of the instrument panel. Provisions have been made to allow the installation of an additional speaker on the left side. On other models, dual-speakers are standard.

NOTE: On Air Conditioned equipped models, the speakers are located in the air ducts. Grille doors should be open when radio is in use.

Operation

Six push buttons are used; five for station selection and one "Off" button. A manual station selector is located on the right of the console. On the left, a dual knob provides volume control on the inner knob with bass-treble control on the outer knob.

Setting the Push Buttons • Set the push buttons in daytime because interference from weak stations is stronger at night. Allow radio to warm up a few minutes. Set tone control on center position, extend antenna to limit, and pull the first left selector button to the left and outward as far as it will go. Tune in the first station desired (at left of dial) with manual tuning knob. Then press button firmly inward to lock it in place on the station tuned. Continue setting push buttons in sequence to the right until all are adjusted to your favorite stations.

IMPORTANT • In the event of a National Emergency, tune in Civil Defense Broadcast by setting radio dial pointer at 640 or 1240 Kilocycles. These settings are identified on the dial of your radio by the Civilian Defense Insignia (triangle in a circle).

Front Seat Adjustment • The adjusting lever is located at the front left corner of the seat base. Push down knob to adjust seat as desired.

Airliner Reclining Seat • Each side of the front seat-back is independently adjustable to five positions. The seat-back may be lowered to the next

position by leaning forward slightly, raising the control lever, and then releasing the lever as the cushion falls into position. The mechanism is designed to make it impossible to move the lever to lower the seat-back when the weight of the occupant is against the back cushions. This safety feature prevents inadvertent lowering of the seat-back. The seat-back is easily returned forward without use of the lever. Slowly lift the seat-back to the next position desired, one "click" at a time —Do not pull the seat-back up rapidly.

Twin Travel Bed • Place the front seat in the full forward position. Install the supports provided on rear seat-cushion base and then lower reclining front seat to the bed position. Suggestion for added comfort: Before lowering front seat, pull the rear seat cushion up and wedge it against rear seat-back to better serve as a head rest. To protect upholstery, insert a length of cloth between rear seat-cushion and rear seat-back. (See air mattress on Page 36.)

Continental Tire Carrier • The lever located just behind the tire releases the mechanism, allowing tire to swivel for easy trunk access. To remove the wheel; remove the hub-cap with jack handle (cloth-wrapped to prevent scratches) and take off the key lock and three bolts. The outer rim of the tire cover may be removed by springing outward.

1958 RAMBLER SIX and V-8 Lubrication Service Chart

Lubricate at each arrow point every 1,000 miles except as noted

Consult your dealer regarding service recommendations

5810 Series—Six

Oil Bath Type—Capacity 1 Pt.
Summer—SAE 50
Winter—SAE 20

Wire Gauze Type—spray with crankcase grade oil

Generator (2 oilers) ..... **EO**

Air Cleaner ..... **EO**
Clean and re-oil at crankcase drain intervals

Crankcase (check level) ... **EO**

Above +32° F.	SAE 20	**Multi-Viscosity**
Above +10° F.	SAE 20W	
Above −10° F.	SAE 10W	10W-30
Below −10° F	SAE 5W	5W-20

Drain and re-fill every 2,000 miles

Gear Shift Control Lever (fitting) ..... **CL**
Automatic Transmission Model, no lubrication

Throttle Linkage ..... **EO**
Felt wick and oil pivot points

Automatic Transmission (dip stick check level)

Oil Cap Filter—every 2,000 miles ..... **EO**
(clean and re-oil)

Steering Gear (plug) ..... **CL**

Power Steering Reservoir (check level) ..... **ATF**
Fill to ½" from top

Oil Filter—Where so equipped, replace element every 4,000 miles

Distributor

	Internal Adjustment Type	External Adjustment Type
Shaft Oil Cup	**EO**	**EO**
Wick under Rotor, 5,000 miles	**EO**	**NONE**
Cam—Coat surface lightly every 5,000 miles	**PJ**	**NONE***
Upon replacement of Contact Set	**BBL**	**NONE***
Breaker Pivot—every 5,000 miles.	**EO**	**NONE**
Felt Wick—Between plates of Vacuum Advance—every 5,000 miles	**EO**	**NONE**

Control Arms (fitting on upper and lower Front Trunnion) ..... **CL**

Pitman Arm (fitting) ..... **CL**
Power Steering models only

5820-5880 Series

Oil Cap Filter—every 2,000 miles (clean and re-oil) .. **EO**

Air Cleaner ..... **EO**
Clean and re-oil at crankcase drain intervals

Oil Bath Type—Capacity 1 Pt.
Summer—SAE 50
Winter—SAE 20

Dry Type—Remove element and shake off dust. Replace every 10,000 miles. Do not dip or wash in oil or solvent of any type

Crankcase (check level) .. **EO**

Above +32° F.	SAE 20	**Multi-Viscosity**
Above +10° F.	SAE 20W	
Above −10° F.	SAE 10W	10W-30
Below −10° F	SAE 5W	5W-20

Generator (2 oilers) ..... **EO**

Automatic Transmission (dip stick check level)

Steering Gear (plug) ..... **CL**

Throttle Linkage ..... **EO**
Felt wick and pivot points

Gear Shift Control Lever (fitting) ..... **CL**
Automatic transmission model, no lubrication

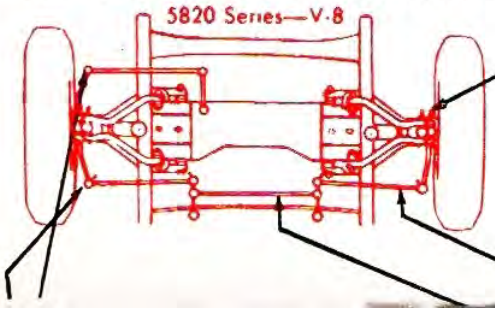

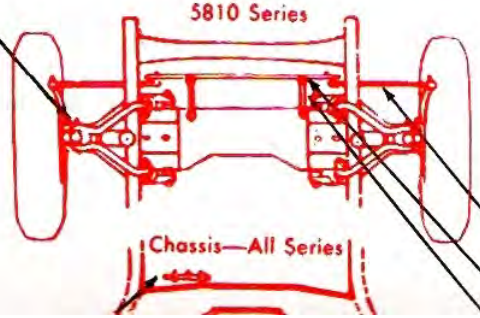

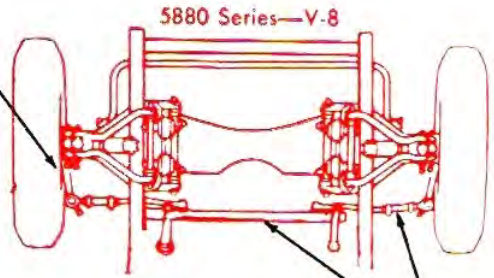

Link—Pitman Arm to Steering Arm (2 fittings) CL

Link—Steering Arm to Idler Arm (2 fittings) CL

Drag Link (fitting on each end) CL

Link—Idler Arm to Steering Arm (2 fittings) CL

Clutch Release Shaft (2 fittings) CL

Park Brake Cable ..... EO
Lubricate sparingly where cable enters conduit

Brake Master Cylinder (check level) ..... HBF
Accessible in engine compartment

Power Brake Air Cleaner (clean every 10,000 miles)

LUBRICANT SYMBOLS

ATF Automatic Transmission Fluid, Type A, AQ-ATF

BBL Ball Bearing Lubricant

CL Chassis Lubricant

MGL Mineral Gear Lubricant

HBF Hydraulic Brake Fluid, Heavy Duty (SAE 70-R-1)

MP Multi-Purpose Gear Lubricant

EO Engine Oil

WBL Wheel Bearing Lubricant

PJ Petroleum Jelly

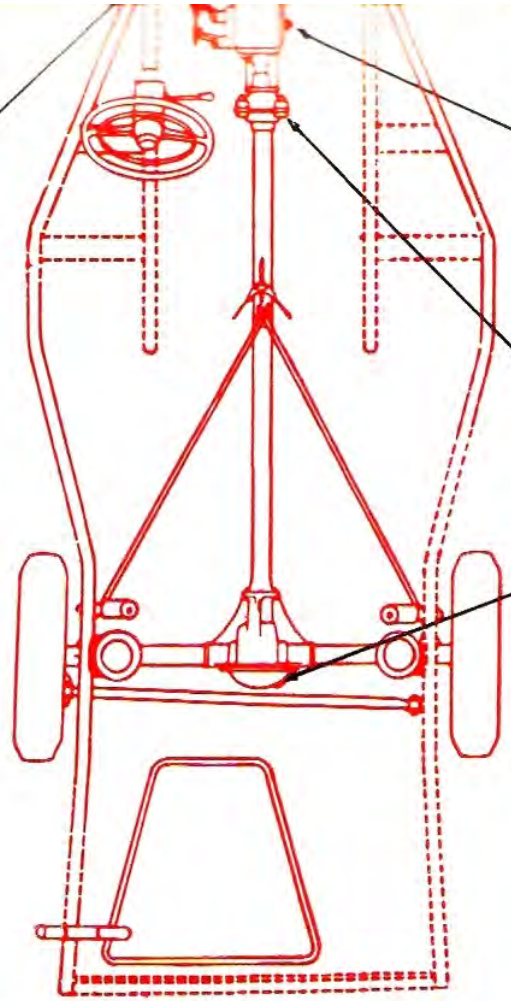

Tie Rod (fitting on each side) CL

Drag Link (fitting on each side) CL
Power steering models—fitting on tie rod end

Steering Idler Arm (fitting) 6-cylinder only CL

TRANSMISSION (check level)

Synchromesh and Overdrive ..... MGL

Above +32° F. ..... SAE 90

Below +32° F. ..... SAE 80

Drain and refill every 10,000 miles

Overdrive drained and refilled through separate plugs

Flash-O-Matic—Drain and refill every 15,000 miles .. ATF

Torque Tube Trunnion (fitting) CL
(Six only) every 5,000 miles

DIFFERENTIAL (check level) SAE 90 ..... MP
Drain and refill periods not recommended

Powr-Lok equipped—See your AMC Dealer for special lubrication specifications

Wheel Bearings (repack) ..... WBL

Front, every 10,000 miles
Rear, when dismantled for other service reasons

TIRE PRESSURE (COLD)

Front and Rear ..... 24 Lbs. (108" W. B.)
Front ..... 22 Lbs. Rear ..... 20 Lbs. (117" W. B.)

ALL-SEASON AIR CONDITIONING SYSTEM

Once a year—leak test, check oil level in compressor; recharge system if necessary

Freon-12 ..... 3 lbs.

No periodic lubrication required. Replace cam lubricator wick when replacing contact set

MEASURE SYSTEM	CRANKCASE		TRANSMISSION									DIFFERENTIAL		COOLING SYSTEM						GAS TANK
			Flash-O-Matic			Synchromesh			Overdrive					Without Heater			With Heater			
	Quarts		Quarts			Pints			Pints			Pints		Quarts			Quarts			Gallons
				V-8			V-8			V-8					V-8			V-8		
	Six	V-8	Six	108" W. B.	117" W. B.	Six	108" W. B.	117" W. B.	Six	108" W. B.	117" W. B.	Six	V-8	Six	108" W. B.	117" W. B.	Six	108" W. B.	117" W. B.	
U.S.A.	4*	4*	10	10	11	1.5	2.25	4	2.75	3.5	4	3	4	10	20	19	11	21	20	20
British Imperial	3.3	3.3	8.3	8.3	9.2	1.25	1.9	3.3	2.3	2.9	3.3	2.5	3.3	8.3	16.7	15.8	9.2	17.5	16.7	16.7

*With Filter Change, Add 1 Qt.

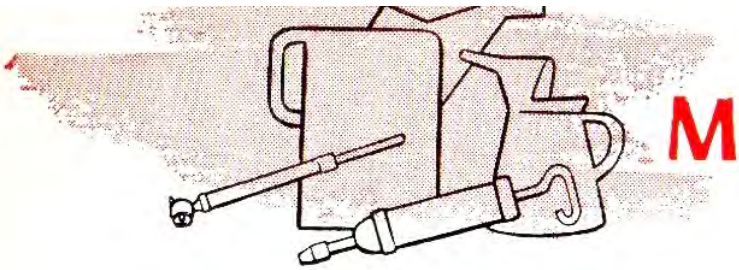

Maintenance

Your new car is designed to be easily serviced and maintained in like-new condition. There are many competent independent shops capable of handling minor repairs and adjustments. Authorized dealer service stations, however, are staffed with experienced mechanics who know your car thoroughly. In addition, only dealer service stations are equipped with the special tools and instruments which make repairs and adjustments easy and sure, at lowest over-all cost to the owner.

A few maintenance operations will forestall more extensive repairs later. Such operations involve routine lubrication, periodic adjustments and checks of major car components such as cooling system and battery. Your car will give better service, at lower cost and with greater satisfaction, if these operations receive proper attention.

Oil Changes • The initial change should be made between 300 and 500 miles. The best periods for subsequent drains are affected by a variety of conditions; no single mileage figure can apply to all types of driving. (See Page 30)

Under normally favorable conditions draining at 2000-mile intervals is good practice. In summer, with other operating conditions favorable to oil life, 3000-mile drain periods are permissible. Oil changes in cold weather should be made more frequently—twice as often is suggested. In short run, start-and-

stop winter service, when engine is not allowed to warm up properly, oil should be changed still more frequently—as often as every 700 to 1000 miles.

For economy, drain crankcase when level is low. Discard exhausted oil, not fresh lubricant. Always drain when oil is hot, after running.

Engine Oil • Form the habit of having the oil level checked whenever fuel is purchased. If the oil level is down to the ADD OIL mark on the oil level gauge, oil should be added to bring it up to the FULL mark. DO NOT OVERFILL.

Premium (MM) oil is satisfactory for use under normal operating conditions. For more severe service, Heavy Duty (MS) oil may be used if desired.

The engine should be lubricated with SAE 20, 20W, 10W, or 5W oils, rather than the heavier SAE 30 or SAE 40. (The "W" indicates oils specially suited for winter use.)

The grade used should be determined by the lowest anticipated temperature before the next oil change period.

		Multi-Viscosity
ABOVE +32° F.	SAE 20	
ABOVE +10° F.	SAE 20W	10W-30
ABOVE −10° F.	SAE 10W	
BELOW −10° F.	SAE 5W	5W-20

Do not switch brands indiscriminately—some oils tend to interact chemically when mixed. Oils designated as regular (ML) are not recommended since MM and MS oils offer more protection under a greater variation in driving conditions.

Maintenance

Lubrication of Running Gear • Most of the working parts of the running gear should be lubricated at 1,000-mile intervals, as shown by the chart on pages 22 and 23. Note that a few points require attention only at 2,000, 3,000, 5,000, 10,000 or 15,000-mile intervals.

If the car is operated in dusty, wet or slushy weather, and particularly in mud, it is good practice to lubricate the running gear more frequently. Under these conditions the lubricant tends to be washed out of bearings exposed under the car. The best time to lubricate is immediately after operation under such adverse conditions, to flush out the water and foreign matter with fresh lubricant.

Weather Eye or Air Conditioning System Filter • Change filter yearly—more often if necessary.

12-Volt Battery • Check weekly and maintain electrolyte level above plates with distilled water—do not overfill. To prevent corrosion, clean terminals with a baking soda water solution, and coat with lubricant occasionally. Caution: Keep lighted cigarettes or flame away from top of open battery cells as a combustible gas is always present.

Fuses • Electrical circuits are protected with fuses and circuit breakers, located as follows:

Circuit	*Ampere Rating*	*Location*
Headlights, Hi-Beam Signal	**18**	**Cir. Brk. . . . Part of headlight switch**
Park, Tail, License, Glove Box, Instrument Lights.	**12**	**Cir. Brk. . . . Part of headlight switch**
Stop, Turn Signals, Heating and Air Cond.	**30**	**Cir. Brk. . . . Inside body cowl, left side**
Overdrive Relay	**15**	**Fuse . . . . Under hood, on O.D. relay**
Radio	**5**	**Fuse . . . . . In radio power line**
Dome Light	**7½**	**Fuse . . . . . Rear of headlight switch**
Power Windows . . . . . two;	**30**	**Cir. Brk. Inside body cowl; each side**

Maintenance

Tire Changes • When changing tires and wheels or installing tire chains, set parking brake or block wheels. Proper location of the bumper jack is next to the bumper guards, and inclined slightly toward the bumper guards to prevent slipping out of place. Place small control lever on jack body in desired position "up" or "down"; operate jack with combined handle and wheel-nut wrench. Tighten wheel nuts securely. Replace hubcap or disc—be sure it is snapped into place all around.

Tubeless Tires • Recommended pressure for normal service is 24 lbs. on 108″ wheelbase and 22 lbs. front, 20 lbs. rear on 117″ wheelbase. Do not bleed tires down to recommended pressure if tires are warm.

For cars driven at sustained rates of high speed or on trips where above average speeds or loads are maintained, tire pressures may be increased up to 30 lbs. (cold before running). The higher pressure will increase stability with some sacrifice of riding quality.

Check tires daily for visible under-inflation and for signs of uneven wear, also occasionally for alignment and balance.

In accordance with this diagram, rotate your

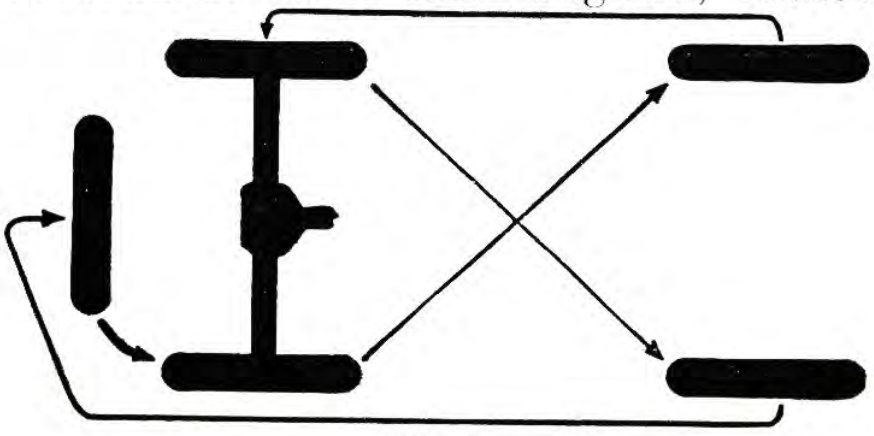

tires within the first 2,500 miles, again at 5,000, and every 5,000 thereafter. It is not necessary to remove tires from the wheels.

Brakes • Check master cylinder level every 1,000 miles. Add or refill with SAE 70-R-1 heavy-duty hydraulic brake fluid only. Inferior fluids may fail in emergencies.

Fuels • The Six and V-8 engines on 108″ wheelbase models will operate satisfactorily on "regular" grade gasoline of about 90 Research octane number. If knock does not occur using regular gasolines and with correct spark advance, no advantage can be gained by using premium gasolines. Should knocking or "pinging" occur at full throttle using regular gasoline, a change to premium fuel of about 96 Research octane number should eliminate the knock and improve efficiency. Retarding ignition timing from the factory setting will reduce or eliminate fuel knock, but tends toward losses in economy and power.

On all 117″ wheelbase V-8 models, premium fuel of about 96 Research octane is required. Ignition timing for all models is 5° B.T.D.C.

Detonation or "fuel knock," normally absent, is influenced by a number of factors such as amount of combustion chamber deposits, ignition timing, atmospheric humidity, engine temperatures and other conditions. The most common cause is the relatively low octane rating of the gasoline used.

Driving Dividends

Cooling • When removing the radiator cap while the engine is hot, first loosen cap to the first notch to reduce pressure before removing the cap. Do not overfill when cold; normal expansion when hot will waste anti-freeze in winter. Adding rust inhibitor in summer will prevent corrosion—most anti-freeze solutions contain rust inhibitor. Use American Motors alcohol or glycol base anti-freeze—consult your dealer for correct mixture quantities.

A 170° F. thermostat is standard. A 180° F. thermostat is available from your dealer for improved heater operation and engine performance in extremely cold weather. If a 180° F. thermostat is installed, use American Motors permanent-type anti-freeze (ethylene-glycol).

Before adding any anti-freeze solution, the cooling system should be inspected and serviced for winter by your dealer. The system should be cleaned, checked for leaks, and the cylinder head bolts properly tightened. After installing the solution, the system should be checked regularly to insure against leakage.

Radiator drain is located on bottom left side. Six cylinder engine drain is located on lower left side of block. The V-8 engine has two drains, one on each side at lower center of block.

The Break-In Period • The manner in which you drive your new car for its initial mileage has a pronounced effect on its subsequent operation.

Driving Dividends

Two basic principles, if followed, will assure proper break-in:

1. The engine should be "worked" by intermittent running at reasonably high speeds. However, too much speed can be harmful and must be avoided.

2. The engine requires progressive break-in at various speeds or steps before it is safe to operate continuously at all speeds.

Based upon the foregoing principles, a simple break-in program is recommended as follows:

For the first 50 miles avoid opening the throttle fully while accelerating or hill climbing. Keep under 50 miles per hour for the first 250 miles, but during the latter part of this mileage short periods of acceleration at full throttle, in high or overdrive, are desirable.

After 250 miles, short periods at increasingly higher speeds are permissible. Step up speeds gradually as mileage accumulates—operation of the car at low speeds contributes little, if anything, to effective break-in at higher speeds. Varying speeds, with some full throttle accelerations, are better than steady speeds.

Engine noise and oil consumption can be expected to reduce as break-in progresses and internal friction decreases. Light oil—preferably of the 10W viscosity grade—should be used. The original oil installed in the engine at the factory is suitable, but it should be changed not later than at 1,000 miles

(300 to 500 miles is better), to drain out the metal particles and other foreign material that accumulate faster during this period. An extra chassis lubrication around 500 miles will insure lubrication to suspension parts during the critical break-in period.

Your dealer has American Motors approved engine "additives" which are compatible with all engine parts, and can be used if desired. Consult your dealer for correct usage of the approved additives. The factory cannot assume responsibility for damage if other brands are used.

Starting • To start a cold engine, depress accelerator at least half way and release, which moves choke from warm operating position.

When starting a hot engine, or an engine which has been flooded, depress the accelerator fully and hold while starting.

Idling • Avoid excessively long idling periods—this is not a good way to warm up an engine. Water condensation in the cylinders and engine wear both are accelerated under these conditions. Shut off the engine when waiting at a railroad crossing or in a traffic jam—restarting takes a negligible amount of gasoline. Do not run the engine with garage doors closed. During warmup the exhaust gases contain large quantities of deadly carbon monoxide.

Standard or overdrive engine idle speed is 550 RPM. (See page 14 for automatic.)

City Driving • The frequent starting and stopping,

prolonged idling periods and perhaps a tendency to demonstrate accelerating ability all combine to reduce operating economy.

Remember that your engine does considerable work in overcoming inertia in starting and in building up momentum. Use this developed momentum to drive your car—do not dissipate it in unnecessary braking. Accommodate your driving to established traffic flow and drive at an even speed to coincide with the timing of traffic lights. Avoid street car tracks and chuck holes; turn corners slowly and do not scuff tires against the curb when parking.

Country Driving • High speed driving—50 to 70 MPH when road and traffic conditions permit—is far less injurious to car and engine than is commonly assumed. Fuel consumption, however, will be greater than at lower speeds. After a hard run in extreme hot weather, let engine idle about ½ minute before shutting off to reduce water boiling tendency in block.

Severe application of brakes at high speed is hard on the linings. For example, a brake stop at 60 is four times as severe on the brakes as at 30 MPH.

Hot Weather Driving • Hot weather driving places a heavy load on the cooling and engine lubricating systems. Make sure there is sufficient coolant in the system—that there is no accumulation of insects or other debris at the radiator core. A good rust inhibitor added to the radiator in summer driving

will forestall accumulation of rust and scale. Use a good grade of engine oil. Modern premium oils, drained at regular intervals, keep your engine clean inside and prolong its life. Do not switch indiscriminately from one make or grade of oil to another.

Hot weather driving is frequently accompanied by dusty operating conditions. The wire-gauze type carburetor air cleaner under normal conditions should be cleaned every 2,000 miles by washing the filter unit in kerosene or naphtha and then soaking in engine oil. Cellulose-Fibre or Oil-Bath air cleaners should be cleaned and serviced periodically as specified on the label. (See Lubrication Chart)

Do not overlook the crankcase ventilating intake in dusty operation. Examine its condition, clean and re-oil if necessary, when checking engine oil.

Cold Weather Driving • (See Page 25) Cold weather driving probably imposes greater hardship on the engine and vehicle than any other natural operating condition. Frequent starting and short trips in cold weather are particularly conducive to the accumulation of condensation and sludge, and to the dilution of engine oil. An occasional driving period of sufficient duration and speed to thoroughly heat the engine to summer operating temperature will "boil off" condensation and contaminants.

Drive slowly until the engine reaches normal operating temperature, to avoid wear on engine parts slow to receive lubrication because of rela-

tively high oil viscosity in cold weather. Use a low-viscosity, free-flowing engine oil as specified to assure lubrication during the critical warmup period.

Keeping the gas tank full in cold weather will reduce the tendency toward condensation in the tank and possible resultant fuel line freezing. Fill tank at end of each day's driving rather than at the start. Drain fuel-filter chamber of fuel pump every 2,000 miles to avoid freeze-up in winter.

Wash car frequently to reduce accelerated corrosion underneath caused by ice-removal agents.

Washing • The baked enamel finish may be maintained by frequent washing with cold water. Saturate the surface dirt thoroughly and wash gently with a clean sponge, using running water. Dry to a high polish with a clean, damp chamois skin.

Never use hot water and avoid washing the car under a hot sun or when enamel surfaces are hot.

Polishing • Stains and road film may be removed with factory-approved Polish and Cleaner. Avoid the use of compounds containing excessive amounts of abrasive material. Ask your dealer for his recommendations before using any preparations.

Care of Upholstery • Clean the inside often, using a whisk broom or vacuum cleaner. Use factory-approved Fabric Cleaner or Kar-Kleen to remove troublesome spots from cloth.

For cleaning vinyl upholstery, Kar-Kleen or mild

soap and lukewarm water will do the best job and both are safe methods of cleaning.

WARNING: Never use gasoline, furniture polishes, oils, varnishes, or other prepared cleaners as many of these are harmful to this type of upholstery.

Care of Chrome Parts • Chrome parts and bright work should be cleaned by washing with a sponge or washing mitt and clear cold or lukewarm water. A mild soap or detergent may be used if necessary. Stiff brushes should not be used.

Chrome Protection • Salt and calcium chloride used on roads during winter as melting agents are especially destructive to chrome, as is salt air and spray in seaboard localities. To prolong the appearance of chrome parts, cleanliness is most important. A paste wax should be used as a protective coating on all chrome and bright work finishes, which are subjected to severe exposure.

Trailers • Should you contemplate hauling a utility or house trailer, it is advisable that you follow our instructions covering rear axle tire load limits, springs, hitch specifications, etc. To obtain this information, write to American Motors Corporation, Service Department, 14250 Plymouth Road, Detroit 32, Michigan.

AMERICAN MOTORS APPROVED ACCESSORIES

These accessories are designed for utility—to give you more comfort, convenience, safety and protection. Your dealer will be happy to show and demonstrate them to you, plus additional items.



SEAT BELTS
Airliner type.

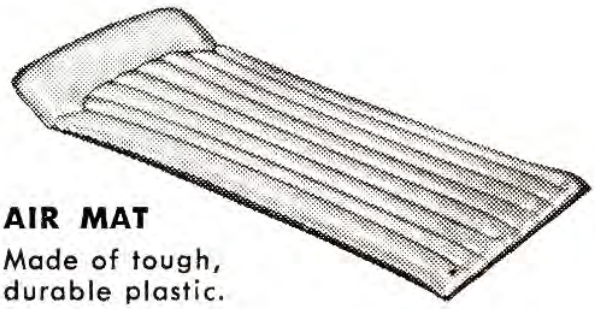

AIR MAT
Made of tough, durable plastic.



CUSHION TOPPERS
Protect seat cushions without hiding interior styling.

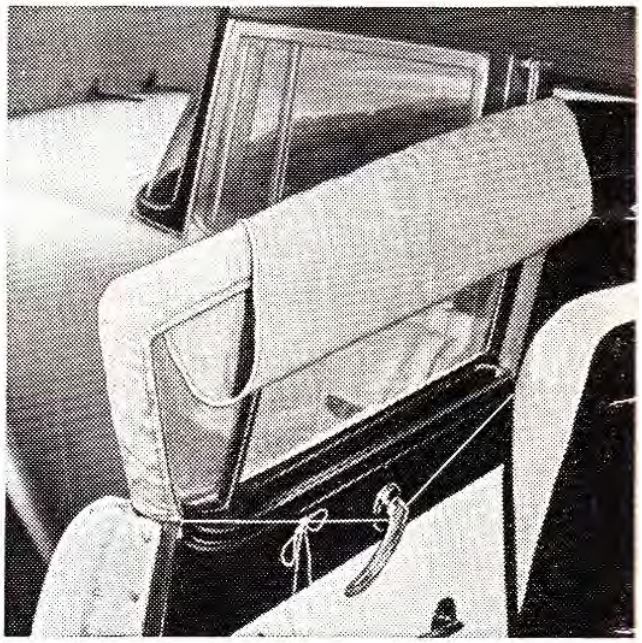

WINDOW SCREENS
For extra sleeping comfort.

AMERICAN MOTORS CAR



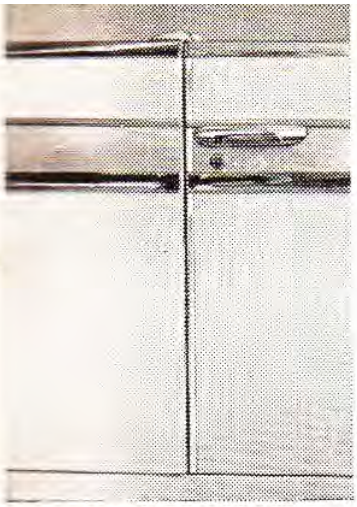

DOOR EDGE GUARDS

Prevents paint chipping and rust.

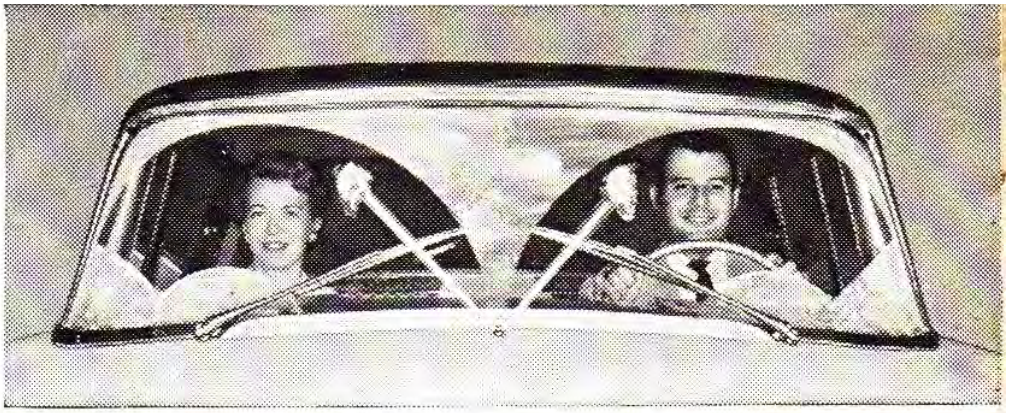

WINDSHIELD WASHER

For safer driving vision; foot pump control.



CUSTOM REAR VIEW MIRROR

For left- and right-hand mounting.

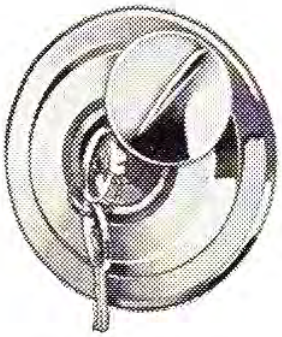

LOCKING GAS CAP

Protection from fuel theft.

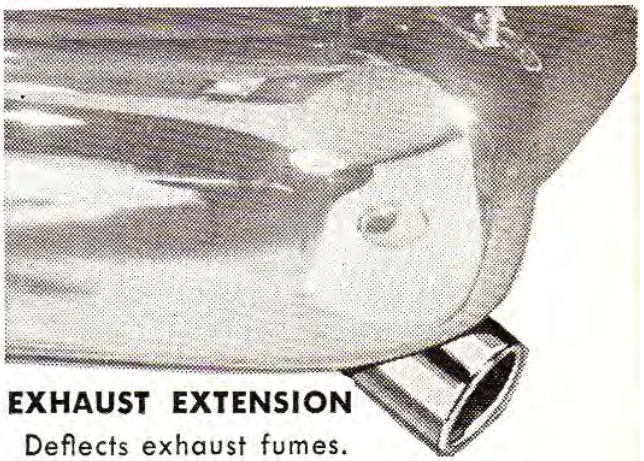

EXHAUST EXTENSION

Deflects exhaust fumes.





CONTOUR FLOOR MATS

Colors to harmonize with interior styling.

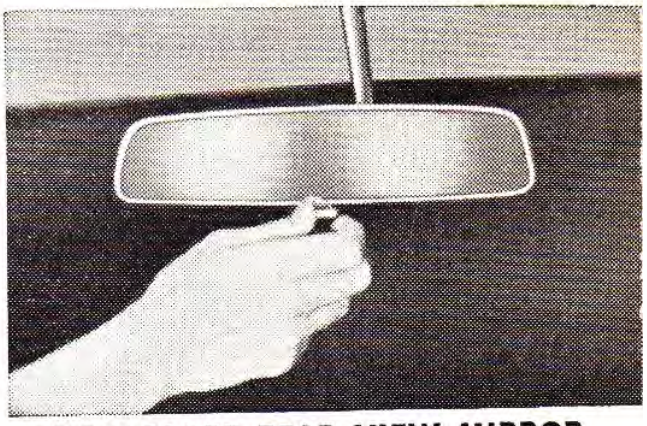

NON-GLARE REAR VIEW MIRROR

Prevents headlight glare from behind.

CARE MATERIALS

AMERICAN MOTORS ANTIFREEZE

Permanent and Alcohol Types



A.M.A.—UNIFORM WARRANTY

"The Manufacturer warrants each new Motor Vehicle manufactured by it, to be free from defects in material and workmanship under normal use and service, its obligation under the Warranty being limited to making good at its factory any part or parts thereof, including all equipment or trade accessories (except tires) supplied by the Motor Vehicle Manufacturer, which shall, within ninety (90) days after making delivery of such vehicle to the original purchaser or before such vehicle has been driven 4,000 miles, whichever event shall first occur, be returned to it with transportation charges prepaid, and which its examination shall disclose to its satisfaction to have been thus defective; this Warranty being expressly in lieu of all other warranties expressed or implied and of all other obligations or liabilities on its part, and it neither assumes nor authorizes any other person to assume for it any liability in connection with the sales of its vehicle.

"This Warranty shall not apply to any vehicle which shall have been repaired or altered outside of an American Motors Authorized Dealer Service Station in any way so as, in the judgment of the manufacturer, to affect its stability or reliability, nor which has been subject to misuse, negligence or accident."

RADIO

The radio set is guaranteed free of defects for a period of 90 days from the date of purchase of the car. In the event that the set is defective within warranty, or is not performing satisfactorily, the owner should return the car with the set to the Dealer for adjustment.

American Motors Corporation reserves the right to make changes in design or to make additions to or improvements in its product without imposing any obligation upon itself to install them on its products previously manufactured.

Specifications

	108″ Wheelbase		117″ Wheelbase
	Six	V-8	V-8
Overall Length	191.14″	191.14″	200.14″
Cross Country	193.61″	193.61″	202.61″
Continental Tire	198.89″	198.89″	207.89″
Width	71.32″	71.32″	71.32″
Height	58.00	57.80″	58.00″
With Optional Tires	58.10″	——	——
Cross Country	58.57″	58.37″	58.57″
With Optional Tires	58.67″	——	——
Tread—Front	57 3/4″	58 3/4″	57 3/4″
Rear	58″	59 1/8″	59 1/8″
Tire Size, Tubeless	6.40 x 15	7.50 x 14	8.00 x 14
Optional	6.70 x 15		
Tire Pressure Lbs., Cold (See Page 27)	24	24	22 (Front) 20 (Rear)
Horsepower, Brake, Single Throat Carburetor	127 @ 4200		
Optional Dual Throat Carb.	138 @ 4500		
Four Barrel Carburetor		215 @ 4900	270 @ 4700
Torque, Lb. Ft., Single Throat Carburetor	180 @ 1600		
Optional Dual Throat Carb.	185 @ 1800		
Four Barrel Carburetor		260 @ 2500	360 @ 2600
Bore and Stroke	3 1/8 x 4 1/4	3 1/2 x 3 1/4	4 x 3 1/4
Displacement, Cu. In.	195.6	250	327
Compression Ratio	8.7:1	8.7:1	9.7:1
Gasoline Grade	Regular	Regular	Premium
Radiator Cap Pressure,	13	13	13
Capacities—See Page 23			
Electrical System	12 Volt	12 Volt	12 Volt
Spark Plug Gap	.035″	.035″	.035″
Distributor Point Gap	.016″	.016″	.016″
Ignition Timing (See Page 28)	5° B.T.D.C.	5° B.T.D.C.	5° B.T.D.C.
Cam Dwell Angle	28° to 35°	26° to 33°	26° to 33°
Breaker Arm Tension	19 to 23 Oz.	19 to 23 Oz.	19 to 23 Oz.
Valve Clearance (Hot) Intake	.012″	.012″	Hydraulic Lifters
Exhaust	.016″	.014″	Hydraulic Lifters
Caster		0 to +1/2 Deg.	
Power Steering		+1/2 to +1 Deg.	
Camber		+1/4 to −1/4 Deg.	
Toe-In		1/16″ to 3/16″	

INDEX

Accessories 36, 37
Air Conditioning 6, 19, 26
Air Coil Ride 18
Automatic Transmissions 9-15
Battery 26
Bed 21
Break-In Period 29
Cigarette Lighter 2
Continental Rear Tire Carrier 21
Cooling, Engine 29
Driving Dividends 29
Electric Clock 2
Fuels 28
Fuses 26
Hood Opening 9
Instruments and Controls 2-6
Keys and Locks 2, 8, 9
Lubrication 22-26
Oil Filter 19
Overdrive 14
Parking Brake 3, 12, 16
Power Brakes 16
Power Steering, Power-Lift Windows 16
Powr-Lok Differential 16
Radio 2, 19
Reclining Seat 20
Specifications and Service Adjustments 39
Starting 2, 10
Station Wagon 7
Tires, Tire Changes 27
Trailers 35
Warranty 38
Washing, Cleaning and Polishing 34
Weather Eye 5, 26
Windshield Wipers 4

5th Printing—May 1958
Printed in U.S.A.

Part Number 3154589

Service for your new car . . .

Factory authorized dealers have the shop facilities staffed by factory-trained personnel and equipped with the latest test equipment to keep your new car in top condition. Your local dealer has the know-how to service your car properly, and like other authorized dealers he offers and recommends maintenance—such as lubrication, inspections, and adjustments—which keep your car performance high. When traveling, you will find well-established dealers in our growing organization ready with prompt, courteous service in clean modern shops.

and remember . . .

Your Warranty is dependent on your new car inspection which is provided free at 2,000 miles, by American Motors dealers wherever you may be, through the tourist privilege.

Read and retain your Owner's Service Policy and this Owner's Manual for your protection, since both contain pertinent information for future reference.

American Motors Corporation
Detroit 32 • Michigan
U.S.A.



drive

safely