RB29F*
SRL350LS
SRL349MW

Refrigerator
user manual

English

Free Standing Appliance

imagine the possibilities

Thank you for purchasing a Samsung product.
To receive a more complete service,
please register your product at
www.samsung.com/register

条形码

SAMSUNG

DA68-02945B-9

SAFETY INFORMATION

- Before operating the appliance, please read this manual thoroughly and retain it for your reference.
- Use this appliance only for its intended purpose as described in this instruction manual. This appliance is not intended for use by persons (including children) with reduced physical, sensory or mental capabilities, or lack of experience and knowledge, unless they have been given supervision or instruction concerning use of the appliance by a person responsible for their safety.
- Warnings and Important Safety Instructions in this manual do not cover all possible conditions and situations that may occur. It is your responsibility to use common sense, caution, and care when installing, maintaining, and operating your appliance.
- Because these following operating instructions cover various models, the characteristics of your refrigerator may differ slightly from those described in this manual. R-600a or R-134a is used as a refrigerant. Check the compressor label on the rear of the appliance or the rating label inside the fridge to see which refrigerant is used for your refrigerator. When this product contains flammable gas (Refrigerant R-600a), contact your local authority in regard to safe disposal of this product.
- In order to avoid the creation of a flammable gas-air mixture if a leak in the refrigerating circuit occurs, the size of the room in which the appliance may be sited depends on the amount of refrigerant used.
- Never start up an appliance showing any signs of damage. If in doubt, consult your dealer. The room must be 1 m^3 in size for every 8 g of R-600a refrigerant inside the appliance.

The amount of refrigerant in your particular appliance is shown on the identification plate inside the appliance.

- Refrigerant squirting out of the pipes could ignite or cause an eye injury. When refrigerant leaks from the pipe, avoid any naked flames and move anything flammable away from the product and ventilate the room immediately.
- Failing to do so may result in fire or explosion.

Important safety symbols and precautions:

WARNING	Hazards or unsafe practices that may result in **severe personal injury or death.**
CAUTION	Hazards or unsafe practices that may result in **minor personal injury or property damage.**
	Do NOT attempt.
	Do NOT disassemble.
	Do NOT touch.
	Follow directions carefully.
	Unplug the power plug from the wall socket.
	Make sure the machine is grounded to prevent electric shock.
	Call the contact center for help.
	Note.

These warning signs are here to prevent injury to you and others.
Please follow them carefully.
After reading this section, keep it in a safe place for future reference.

⚠ WARNING SEVERE WARNING SIGNS FOR TRANSPORTATION AND SITE

- When transporting and installing the appliance,care should be taken to ensure that no parts of the refrigerating circuit are damaged.

- Refrigerant leaking from the pipe work could ignite or cause an eye injury. If a leak is detected, avoid any naked flames or potential sources of ignition and air the room in which the appliance is standing for several minutes.
- This appliance contains a small amount of isobutane refrigerant(R-600a), a natural gas with high environmental compatibility that is, however, also combustible. When transporting and installing the appliance, care should be taken to ensure that no parts of the refrigerating circuit are damaged.

⚠ WARNING SEVERE WARNING SIGNS FOR INSTALLATION

- Deteriorated insulation of electrical parts may cause an electric shock or fire.

- Do not place this refrigerator in direct sunlight or expose to the heat from stoves, room heaters or other appliance.
- Do not plug several appliances into the same multiple power board. The refrigerator should always be plugged into its own individual electrical outlet which has a voltage rating that matched the rating plate.
- This provides the best performance and also prevents overloading house wiring circuits, which could cause a fire hazard from overheated wires.
- If the wall socket is loose, do not insert the power plug.
- There is a risk of electric shock or fire.
- Do not use a cord that shows cracks or abrasion damage along its length or at either end.

- Do not pull or excessively bend the power cord.
- Do not twist or tie the power cord.
- Do not hook the power cord over a metal object, place a heavy object on the power cord, insert the power cord between objects, or push the power cord into the space behind the appliance.

- When moving the refrigerator, be careful not to roll over or damage the power cord.
- This may result in an electric shock or fire.

- Do not use aerosols near the refrigerator.

- Aerosols used near the refrigerator may cause an explosion or fire.

- Do not bend the power cord excessively or place heavy articles on it.

- This refrigerator must be properly installed and located in accordance with the manual before it is used.

- Do not install the refrigerator in a damp place or place where it may come in contact with water.

- Deteriorated insulation of electrical parts may cause an electric shock or fire.

- Connect the power plug in proper position with the cord hanging down.

- If you connect the power plug upside down, wire can get cut off and cause a fire or an electric shock.

- Make sure that the power plug is not squashed or damaged by the back of the refrigerator.

- When moving the refrigerator, be careful not to roll over or damage the power cord.

- This constitutes a fire hazard.

- Keep the packing materials out of reach of children.

- There is a risk of death from suffocation if children put them on their head.

- This appliance should be positioned in such a way that it is accessible to the power plug.

- Failing to do so may result in an electric shock or fire due to electric leakage.

- Do not install this appliance near a heater, inflammable material.

- Do not install this appliance in a humid, oily or dusty location, in a location exposed to direct sunlight and water (rain drops).
- Do not install this appliance in a location where gas may leak.
- This may result in an electric shock or fire.
- If any dust or water is in the refrigerator, pull out power plug and contact your Samsung Electronics service center.
- Otherwise there is a risk of fire.
- Do not stand on top of the appliance or place objects (such as laundry, lighted candles, lighted cigarettes, dishes, chemicals, metal objects, etc.) on the appliance.
- This may result in an electric shock, fire, problems with the product, or injury.

- This appliance must be properly grounded.
- Do not ground the appliance to a gas pipe, plastic water pipe, or telephone line.
- You must ground the refrigerator to prevent any power leakages or electric shocks caused by current leakage from the refrigerator.
- This may result in an electric shock, fire, explosion, or problems with the product.
- Never plug the power cord into a socket that is not grounded correctly and make sure that it is in accordance with local and national codes.

- If the power cord is damaged, have it replaced immediately by the manufacturer or its service agent.
- The fuse on the refrigerator must be changed by a qualified technician or service company.
- Failing to do so may result in an electric shock or personal injury.

CAUTION SIGNS FOR INSTALLATION

- Keep ventilation opening in the appliance enclosure or mounting structure clear of obstruction.
- Allow the appliance to stand for 2 hours after installation.
- The installation or any service of this appliance is recommended by a qualified technician or service company.
  - Failing to do so may result in an electric shock, fire, explosion, problems with the product, or injury.

SEVERE WARNING SIGNS FOR USING

- Do not touch the power plug with wet hands.
  - This may result in an electric shock.
- Do not store articles on the top of the appliance.
  - When you open or close the door, the articles may fall and cause a personal injury and/ or material damage.
- Do not put items filled with water on the refrigerator.
  - If spilled, there is a risk of fire or electric shock.
- Do not touch the inside walls of the freezer or products stored in the freezer with wet hands.
  - This may cause frostbite.
- Do not use or place any substances sensitive to temperature such as inflammable sprays, inflammable objects, dry ice, medicine, or chemicals near the refrigerator.
  Do not keep volatile or inflammable objects or substances (benzene, thinner, propane gas, alcohol, ether, LP gas and other such products etc.) in the refrigerator.
  - This refrigerator is for storing food only.
  - This may result in a fire or an explosion.
- Do not store pharmaceuticals products, scientific materials or temperature-sensitive products in the refrigerator.
  - Products that require strict temperature controls

must not be stored in the refrigerator.

- Do not place or use electrical appliance inside the refrigerator/freezer, unless they are of a type recommended by the manufacturer.
- If you smell pharmaceutical or smoke, pull out power plug immediately and contact your Samsung Electronics service center.
- If any dust or water is in Refrigerator, pull out power plug and contact your Samsung Electronics service center.
  - Otherwise there is a risk of fire.
- If gas leak is detected, avoid any naked flames or potential sources of ignition and air the room in which the appliance is standing for several minutes.
- Do not use mechanical devices or any other means to accelerate the defrosting process, other than those recommended by the manufacturer.
- Do not damage the refrigerant circuit.
- Do not spray volatile material such as insecticide onto the surface of the appliance.
  - As well as being harmful to humans, it may also result in an electric shock, fire or problems with the product.
- Do not use a hair dryer to dry the inside of the refrigerator. Do not place a lighted candle in the refrigerator for removing bad odours.
  - This may result in an electric shock or fire.
- Fill the water tank, ice tray and water cubes only with potable water (mineral water or purified water).
  - Do not fill the tank with tea, juice or sports drink, this may damage the refrigerator.
- Do not let children hang on the door.
  If not, a serious injury may occur.
  - Risk of children entrapment. Do not let children enter inside the refrigerator.
- Do not leave the doors of the refrigerator open while the refrigerator is unattended and do not let children enter inside the refrigerator.

- Do not allow babies or children go inside the drawer.
- It can cause death from suffocation by entrapment or personal injury.
- Do not sit on the Freezer door.
- The door may be broken and cause a personal injury.
- Do not use mechanical devices or any other means to accelerate the defrosting process, other than those recommended by the manufacturer.
- Do not damage the refrigerant circuit.
- Do not put fridge shelf in upside down.
  Shelf stopper could not work.
- It may cause a personal injury because of glass shelf drop.

- In the event of a gas leak (such as propane gas, LP gas, etc.), ventilate immediately without touching the power plug. Do not touch the appliance or power cord.
- Do not use a ventilating fan.
- A spark may result in an explosion or fire.
- Use only the LED Lamps provided by manufacturer or service agent.
- Children should be supervised to ensure that they do not play with the appliance.
- Keep fingers out of “pinch point” areas; clearances between the doors and cabinet are necessarily small.
- Do not let children hang on the door.
  If not, a serious injury may occur.
- There is a Risk of children entrapment.
  Do not let children enter inside the refrigerator.
- Bottles should be stored tightly together so that they do not fall out.
- This product is intended only for the storage of food in a domestic environment.
- Never put fingers or other objects into the dispenser hole, ice chute and ice maker bucket.
- It may cause a personal injury or material damage.
- Do not insert hands, feet or metal objects (such as

chopsticks, etc.) into the bottom or the back of the refrigerator.
- This may result in an electric shock or injury.
- Any sharp edges may cause a personal injury.

- Do not attempt to repair, disassemble, or modify the appliance yourself.
- Do not use any fuse(such as cooper, steel wire, etc.) other than the standard fuse.
- When repairing or reinstalling the appliance is required, contact your nearest service center.
- Failing to do so may result in an electric shock, fire, problems with the product, or injury.

- If the appliance generates a strange noise, a burning or smell or smoke, unplug the power plug immediately and contact your nearest service center.
- Failing to do so may result in an electric or fire hazards.
- Pull the power plug out of the socket before changing the interior lamps of the refrigerator
- Otherwise, there is a risk of electric shock.
- If you experience difficulty when changing the light, contact service agent.
- If the products is equipped with the LED Lamp, do not disassemble the Lamp Cover and LED Lamp by yourself.
- Please contact your service agent.
- Plug the power plug into the wall socket firmly.
  Do not use a damaged power plug, damaged power cord or loose wall socket.
- This may result in an electric shock or fire.
- Do not put a container filled with water on the appliance.
- If spilled, there is a risk of fire or electric shock.
- Never stare directly at the UV LED lamp for long periods of time.
- This may result in eye strain due to the ultraviolet rays.

CAUTION

- There is protective film on the surface of some refrigerator models, which is used to

protect the refrigerator from scratches during transport. To avoid static electricity, please peel off the protective film slowly. If the protective film is not removed for a long time, it may cause color shading of the steel plate.

⚠ CAUTION

- It is hazardous for anyone other than an Authorised Service Person to service this appliance. In Queensland - the authorized Service Person MUST hold a Gas Work Authorisation or Licence for hydrocarbon refrigerants, to carry out Servicing or repairs which involve the removal of covers. (For Australia only)

⚠ CAUTION CAUTION SIGNS FOR USING

- To get best performance from the product,

- Do not place foods too closely in front of the vents at the rear of the appliance as it can obstruct free air circulation in the refrigerator compartment.
- Wrap the food up properly or place it in airtight containers before putting it into the refrigerator.
- Do not put any newly introduced food for freezing near to already existing food.

- Do not place glass or bottles or carbonated beverages into the freezer.
- The container may freeze and break, and this may result in injury.

- Please observe maximum storage times and expiry dates of frozen goods.
- There is no need to disconnect the refrigerator from the power supply if you will be away for less than three weeks.
  But, remove all the food if you are going away for the

three weeks or more.
Unplug the refrigerator and clean it, rinse and dry.

- Do not place carbonated or fizzy drinks in the freezer compartment.
  Do not put bottles or glass containers in the freezer.
  - When the contents freeze, the glass may break and cause personal injury and property damage.
- Do not change or modify the functionality of the refrigerator.
  - Changes or modifications may result in a personal injury and/or property damage.
  Any changes or modifications performed by a 3rd party on this completed appliance are neither covered under Samsung warranty service, nor is Samsung responsible for safety issues and damages that result from 3rd party modifications.
- Do not block air holes.
  - If the air holes are blocked, especially with a plastic bag, the refrigerator can be over cooled.
- Use only the ice-maker provided with the refrigerator.
- Wipe excess moisture from the inside and leave the doors open.
  - Otherwise, odor and mold may develop.
- When the refrigerator got wet by water, pull out the power plug and contact your Samsung Electronics service center.
- Do not apply strong shock or excessive force onto the surface of glass.
  - Broken glass may result in a personal injury and/or property damage.

CAUTION SIGNS FOR CLEANING AND MAINTENANCE

- Do not spray cleaning products directly on the display.
  - Printed letters on the display may come off.
- If any foreign substance such as water has entered the appliance, unplug the power plug and contact your nearest service center.
  - Failing to do so may result in an electric shock or fire.
- Remove all foreign

substances such as dust or water from the power plug terminals and contact points using a dry cloth on a regular basis.

- Unplug the power plug and clean it with a dry cloth.
- Failing to do so may result in an electric shock or fire.

• Do not clean the appliance by spraying water directly onto it.

• Do not use benzene, thinner, or Clorox, Chloride for cleaning.

- They may damage the surface of the appliance and may cause a fire.

• Never put fingers or other objects into the dispenser hole.

- It may cause a personal injury or material damage.

• Before cleaning or performing maintenance, unplug the appliance from the wall socket.

- Failing to do so may result in an electric shock or fire.

WARNING SEVERE WARNING SIGNS FOR DISPOSAL

• Leave the shelves in place so that children may not easily climb inside.

• Ensure that none of the pipes on the back of the appliance are damaged prior to disposal.

• R-600a or R-134a is used as a refrigerant.
Check the compressor label on the rear of the appliance or the rating label inside the refrigerator to see which refrigerant is used for your refrigerator.
When this product contains flammable gas (Refrigerant R-600a), contact your local authority in regard to safe disposal of this product.
Cyclopentane is used as an insulation blowing gas.
The gases in insulation material require special disposal procedure.
Please contact your local authorities in regard to the environmentally safe disposal of this product.
Ensure that none of the pipes

on the back of the appliances are damaged prior to disposal.
The pipes shall be broken in the open space.

- When disposing of this or other refrigerator/s, remove the door/door seals, door latch so that children or animals cannot become trapped inside.
Children should be supervised to ensure that they do not enter and play with the appliance.
- If trapped inside, the child may become injury and suffocate to death.
- Please dispose of the packaging material for this product in an environmentally friendly manner.
- Keep all packaging materials well out of the reach of children, as packaging materials can be dangerous to children.
- If a child places a bag over its head, it may result in suffocation.

ADDITIONAL TIPS FOR PROPER USAGE

- In the event of a power failure, call the local office of your Electricity Company and ask how long it is going to last.
- Most power failures that are corrected within an hour or two will not affect your refrigerator temperatures. However, you should minimize the number of door openings while the power is off.
- But should the power failure last more than 24 hours, remove all frozen food.
- If keys are provided with the refrigerator, the keys should be kept out of the reach of children and not be in the vicinity of the appliance.
- The appliance might not operate consistently (possibility of defrosting of contents or temperature becoming too warm in the frozen food compartment) when sited for an extended period of time below the cold end of the range of temperature for which the

refrigerating appliance is designed.

- Do not store food which goes bad easily at low temperature, such as bananas, melons.
- Your appliance is frost free, which means there is no need to manually defrost your appliance, as this will be carried out automatically.
- Temperature rise during defrosting can comply with ISO requirements.
  But if you want to prevent an undue rise in the temperature of the frozen food while defrosting the appliance, please wrap the frozen food up in several layers of newspaper.
- Any increase in temperature of frozen food during defrosting can shorten its storage life.
- Do not re-freeze frozen foods that have thawed completely.

Saving Energy Tips

- Install the appliance in a cool, dry room with adequate ventilation.
  Ensure that it is not exposed to direct sunlight and never put it near a direct source of heat (radiator, for example).
- Never block any vents or grilles on the appliance.
- Allow warm food to cool down before placing it in the appliance.
- Put frozen food in the refrigerator to thaw.
  You can then use the low temperatures of the frozen products to cool food in the refrigerator.
- Do not keep the door of the appliance open for too long when putting food in or taking food out.
  The shorter time for which the door is open, the less ice will form in the freezer.
- Allow clearance to the right, left, back and top when installing.
  This will help reduce power consumption and keep your energy bills lower.

- This appliance is intended to be used in household and similar applications such as
- Staff kitchen areas in shops,offices and other working environments;
- Farm houses and by clients in hotels,motels and other residential type environments;
- Bed and breakfast type environments;
- Catering and similar non-retail applications.

contents

SETTING UP YOUR REFRIGERATOR 16
OPERATING YOUR REFRIGERATOR 23
TROUBLESHOOTING 27

setting up your refrigerator

GETTING READY TO INSTALL THE REFRIGERATOR

Congratulations on the purchase of your Samsung Refrigerator.
We hope you will enjoy the many state-of-the-art features and efficiencies that this new appliance has to offer.

- This refrigerator must be properly installed and located in accordance with the manual before it is used.
- Use this appliance only for its intended purpose as described in this instruction manual.
- We strongly recommend that any servicing be performed by a qualified individual.
- Please dispose of the packaging material for this product in an environmentally friendly manner.

WARNING

- Pull the power plug out of the socket before changing the interior light of the refrigerator.

- Otherwise, there is a risk of electric shock.

Selecting the best location for the refrigerator

- Select a location without direct exposure to sunlight.
- Select a location with level (or nearly level) flooring.
- Select a location with enough space for the refrigerator doors to open easily.
- Allow sufficient space to install the refrigerator on a flat surface.

- If your refrigerator is not level, the internal cooling system may not work correctly.
- Overall space required in use.
  Refer to drawing and dimension as below.

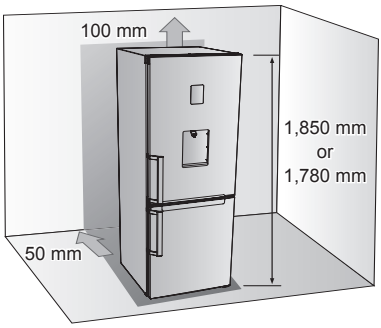

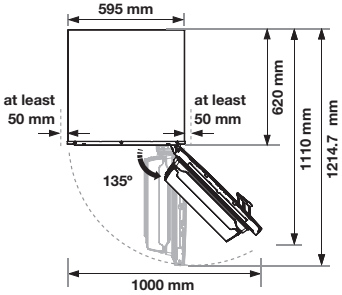

- Allow sufficient space to the right, left, back and top for air circulation.
  This will help reduce power consumption and keep your energy bills lower.
- Do not install the refrigerator where the temperature will go below 10 °C.
- Please ensure that appliance can be moved freely in the event of maintenance & service.

CAUTION When installing, servicing, or cleaning behind the refrigerator, be sure to pull the unit straight out and push back in straight after finishing.
Also, make sure your floor supports the full-load refrigerator.
Otherwise, it may cause floor damage.

CAUTION Please tie up the extra length of the power cord at the back of the refrigerator so as not to be touched on the floor preventing the power cord from being crushed by the rollers upon relocation.

FLOORING

For proper installation, this refrigerator must be placed on a level surface of hard material that has the same height as the rest of the flooring. This surface should be strong enough to support a fully loaded refrigerator (or approximately 65 kg). To protect the floor finish, cut a large section of the cardboard carton and place it under the refrigerator where you are working.

- Pulling or pushing the refrigerator may damage the floor.
  Moving the refrigerator after installation may damage the floor.

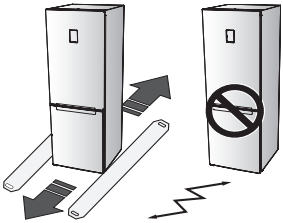

LEVELLING THE REFRIGERATOR

If the front of the appliance is slightly higher than the rear, the door can be opened and closed more easily.
For safety reasons, adjust the front side a little higher than the rear side.

Case 1) The appliance tilts down to the left.
Turn the left adjusting leg in the direction of the arrow until the appliance is level.

Case 2) The appliance tilts down to the right.
Turn the right adjusting leg in the direction of the

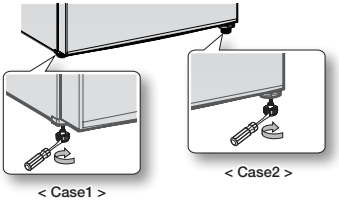

arrow until the appliance is level.

SETTING UP THE REFRIGERATOR

Now that you have your new refrigerator installed and in place, you are ready to set up and enjoy the full features and functions of the appliance.
By completing the following steps, your refrigerator should be fully operational.
If not, first check the power supply and electricity source or try the troubleshooting section at the back of this user guide.
If you have any further questions, contact your Samsung Electronics service center.

1. Place the refrigerator in an appropriate location with reasonable clearance between the wall and the refrigerator.
   Refer to installation instructions in this manual.
2. Once the refrigerator is plugged in, make sure the interior light comes on when you open the doors.
3. Set the temperature control to the coldest temperature and wait for an hour.
   The freezer should get slightly chilled and the motor should run smoothly.
4. After powering the refrigerator, it will take a few hours to reach the appropriate temperature.
   Once the refrigerator temperature is sufficiently cool, you can store food and drink in the refrigerator.

After powering the refrigerator, the alarm will sound. Press Freezer or Fridge button. (Only for Coolselect zone funtion model) Refer to on page 23 “Using the control Panel”.

REVERSING THE DOOR (OPTIONAL)

Before you reverse the refrigerator door, make sure to unplug the refrigerator. Samsung recommends that reversing of the door opening is only completed by Samsung approved Service providers. This will be on a chargeable basis and at the customers expense.

Any damage caused while attempting to reverse the door opening is not covered under the appliance manufactures warranty.
Any repairs requested due to this circumstance will be completed on a chargeable basis at the customers expense.

1. Before attempting to reverse the refrigerator doors ensure that the refrigerator is disconnected from the main electricity supply and all food stuffs are emptied from inside the appliance.
2. If the customer does not feel confident to follow instruction in the user manual, a Samsung qualified service engineer must be contacted to carry out this change.
3. Do not plug in Refrigerator just after door reverse finished process and wait for at least one hour.

Required Tools

Not provided		
		
Phillips Head Driver (+)	Flat Head Driver (-)	11 mm Wrench (for hinge shaft)

Not provided	Additional part	
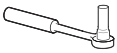	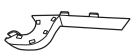	
8 mm Socket Wrench (for bolts)	Hinge Cover / Cap Space Door	

1. Remove the Cover Wire (**1**) and Cap door L (**2**).

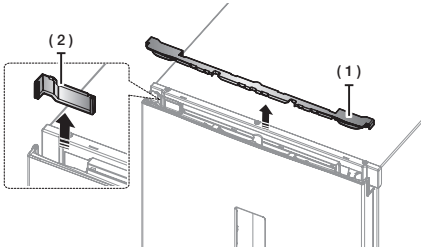

2. Remove the Cover Hinge to push a hook like below Pictures.

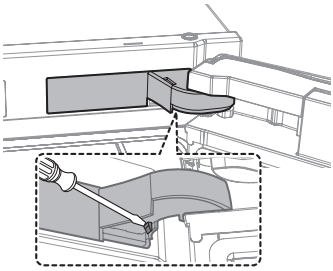

3. Disconnect the housing.
   And then remove 2 screws on the Upper Hinge and Upper Hinge.

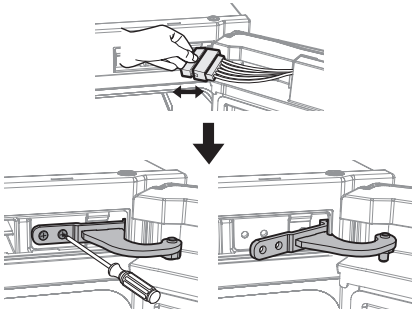

CAUTION The door is heavy, be careful not to injure yourself when removing the door.

4. Remove the fridge door from the Middle hinge by carefully lifting the door straight up.

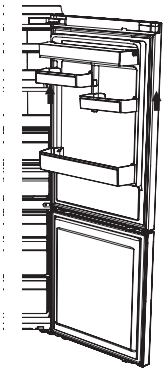

CAUTION The door is heavy, be careful not to injure yourself when removing the door.

5. Disassemble the Middle hinge.

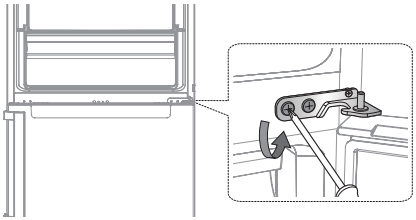

6. Remove the freezer door from the Bottom hinge by carefully lifting the door straight up.

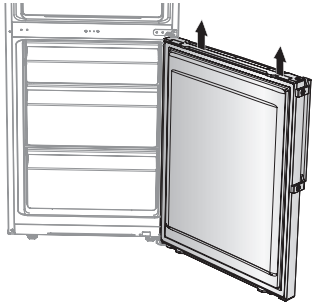

CAUTION The door is heavy, be careful not to injure yourself when removing the door.

7. Lay the refrigerator carefully.
   Remove the Leg (**1**) and the Hinge Low (**2**).

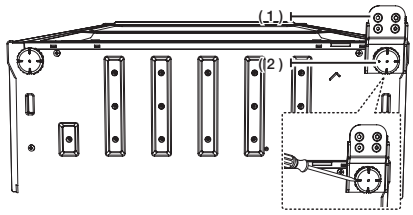

8. Remove the screw (**1**) on the bottom right side of fridge and freezer door. Switch Lever Auto Closer (**2**) from right to the left.

before

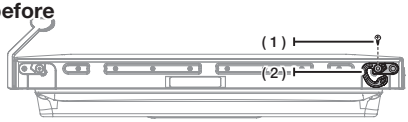

after

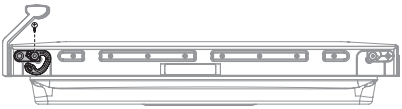

9. Assemble the Middle hinge by the Phillips Head (+) screwdriver. First of all, assemble the Freezer door and Hinge Mid. And then assemble Hinge Low and Fridge Door with Assy Hinge Up.

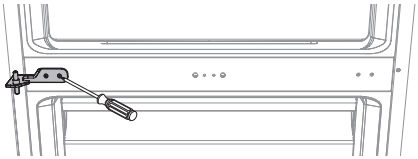

Assembling procedure of the Door

- Hinge Low→Freezer Door→Hinge Mid →Fridge Door with Assy Hinge Up

CAUTION Be careful not to injure yourself during operation.

10. Switch the position of Bottom hinge and Leg (Right → Left).
    Assemble the Hinge Low after putting the Freezer Door in the middle hinge.

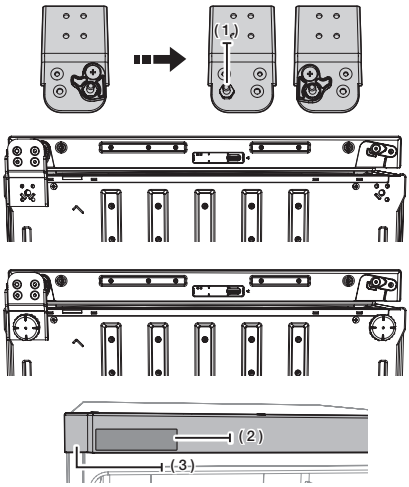

- Disassemble the Guide auto close and the Shaft-hinge (**1**).
- Assemble the Shaft-hinge and the the Guide auto close like this Picture.
- Put the Cap Cover Control Panel (**2**) out from the Cover Control Panel (**3**) like the Picture.

11. After removing a Cover control (**1**), switch the Wire door (**2**) direction to opposite side on Fridge Door (Display model only).
    Assemble the Cover-Control with Screw (**A**) like a Picture (**3**).

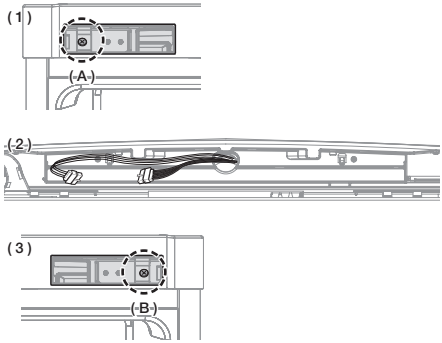

12. Use 11 mm wrench to separate the Top hinge shaft. Flip the Top hinge and reattach the Top hinge shaft.



13. Insert the Top hinge to make the hole a little bigger and then put out the Top hinge to assemble the Fridge door.

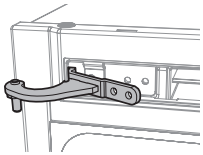

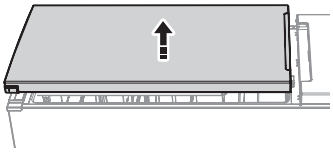

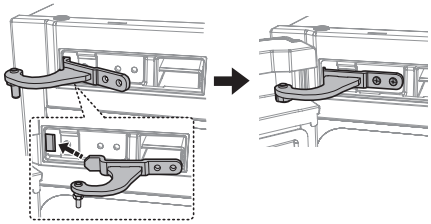

Assemble step

- Assemble the Middle hinge on the Fridge door.
- Assemble the Top hinge on the Fridge door.
- Insert the Top Hinge on the Cabinet.
- Assemble the screw.

14. Connect the wire and then insert it into the Cover-Control.
the wire must be fastened in a suitable place by hook, otherwise the wire could be crushed

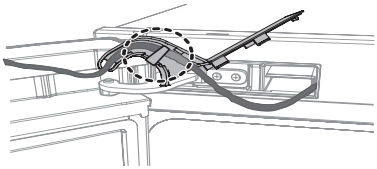

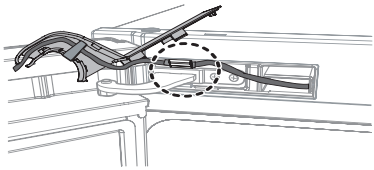

15. Assemble the Cover Hinge to match the Hinge.

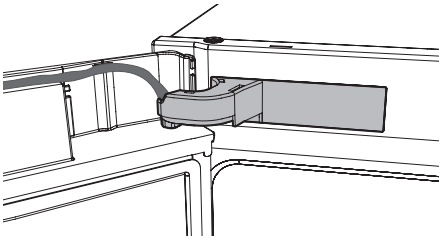

16. Change the Wire door direction to oppposite side and assemble the door cover.

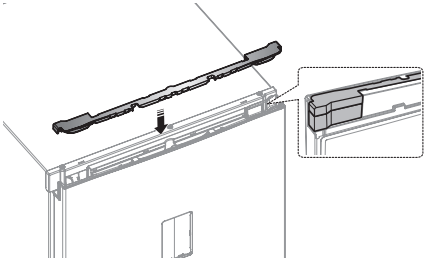

17. Switch the handles from the to left the right.

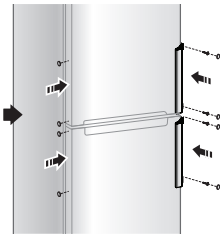

18. Detach the Fridge and the Freezer door gaskets and then attach them after rotating them 180˚.

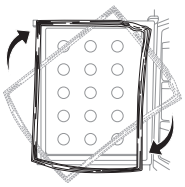

When you reverse the Freezer Door, detach the Freezer Door gasket and the inside left gasket (**A**). And then attach the inside gasket to the right (**B**). Attach the Freezer door gasket after rotating it 180˚.
(Only for SRL350LS, SRL349MW model)

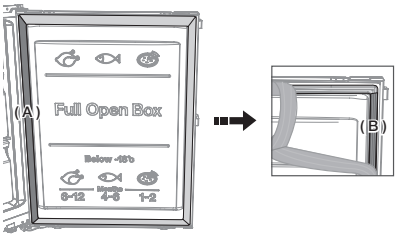

USING THE CONTROL PANEL

TYPE A



TYPE B

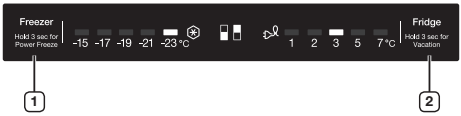

Each time you press a button on the control panel, you will hear a short beep.

When you do not press any button, the LEDs of Freezer, Fridge become turned off for the minimum energy consumption. But LEDs of Power Freeze and Vacation are turned on at the corresponding functions. (Only for SRL350LS, SRL349MW model)

1 Freezer

Press the Freezer button to set the freezer to desired temperature from range between -15 °C and -23 °C. Default set temperature is set on -19 °C and each time you press the Freeze button, temperature will be changed in the following order and temperature indicator will display the desired temperature.

-19 °C – -21 °C – -23 °C – -15 °C – -17 °C

Press this button for 3 seconds to activate the Power Freeze function.
Power Freeze indicator ( ) will light up and the refrigerator will speed up the time to needed to freeze products in the freezer.
This function will be activated for 50 hours and freezer indicator will not change display.
This function switches off automatically.
When the Power Freeze process is completed, the Power freeze indicator switches off and the freezer switches back to the previous temperature setting.
When you use this function, the energy consumption will increase.
Remember to turn it off when you do not need it and return the freezer to your original temperature setting. To deactivate this function, press the Freezer button for 3 seconds.
If you need to freeze large amount of food stuff, activate Power Freeze function 20 hours before.

2 Fridge

Press the Fridge button to set the fridge to desired temperature between 1 °C and 7 °C. Default set temperature is set on 3 °C and each time to you press the Fridge button, temperature will be changed in the following order and temperature indicator will display the desired temperature.

3 °C – 2 °C – 1 °C – 7 °C – 5 °C

Press this button for 3 seconds to activate the Vacation function. Vacation indicator ( ) will light up and the refrigerator will set the temperature to under 17 °C to minimize you are going on a long vacation or business trip or you do not need to use the refrigerator. While Vacation function is activated, freezer compartment remains on. Vacation function will be automatically deactivated if you adjust fridge temperature while Vacation function is on.
Make sure to remove foods in the fridge compartment before using Vacation function.

While Vacation function is activated, Cool Select Zone does not work.
Vacation function is deactivated, Coolselect Zone function will be activated.

Temperature Alarm
(Only for Coolselect zone function model)

- When the freezer compartment is too warm because there has been a power failure, the temperature LED are blinking and the alarm sounded. Press Freezer or Fridge button to stop them.
- This warning may occur:

- When the refrigerator is turned on.
- The freezer compartment is too warm due to a power failure.

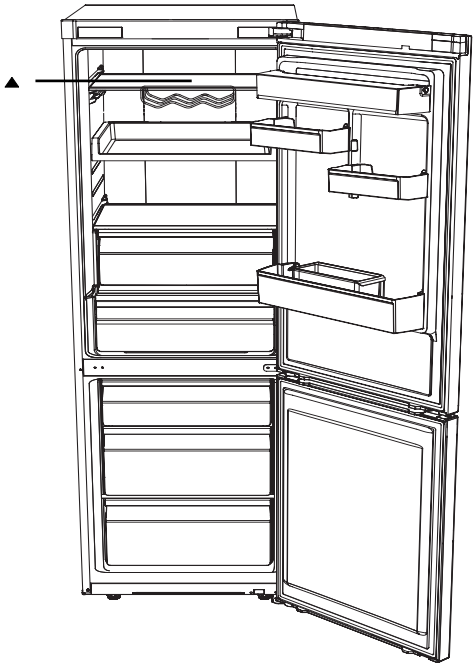

- Please take out rack wine from the box,then install it on the top▲ shelf like this way.

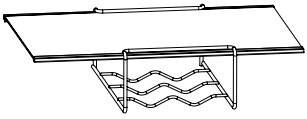

- To get the best energy efficiency of this product, please leave all shelves, drawers and baskets on their original position like as previous illustration.
- To freeze large quantities of food quickly, use the very bottom drawer where food freezes particularly quickly.

ADDITIONAL SHELF

To get more space in the freezer, you can remove all drawers except for bottom drawer and place the additional shelf (optional) just above the bottom drawer. It does not affect thermal or mechanical characteristics. A declared storage volume of the freezer compartment is calculated with these parts removed.



FEATURES OF THE FREEZER COMPARTMENT

Frozen-food mark on the Door panel

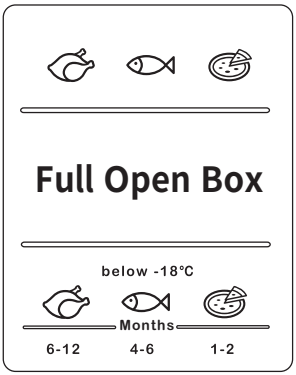

The figures above to the symbols indicate the permitted storage period of the produce in months. When purchasing frozen produce, observe the date of manufacture or sell-by date.

Freezing food

Freeze fresh, undamaged food only. Keep food which is to be frozen away from food which is already frozen. To prevent food from losing its flavour or drying out, place in airtight containers.

Packing food correctly:

1. Place the food in the packaging.
2. Press out all the air.
3. Seal the wrapping.
4. Label the wrapping with the contents and date.

The following products are not suitable for wrapping food:

Wrapping paper, greaseproof paper, cellophane, refuse bags and used shopping bags.

The following products are suitable for wrapping food:

Plastic film, polyethylene blown film, aluminium foil and freezer tins. These products can be purchased from your dealer.

The following products are suitable for sealing the wrapped food:

Rubber bands, plasic clips, string, cold-resistant adhesive tape or similar. Bags and polyethylene blown film can be sealed with a film sealer.

Shelf life of frozen food

Storage duration depends on the type of food. At a temperature setting of -19 °C:

- Fresh Poultry(whole chicken), Fresh meat (steaks, Roasts) : up to 12 months
- Fish(Lean fish, Cooked fish), Fresh shrimp, scallops, squid: up to 6 months
- Pizza, Sausage: up to 2 months

Storage duration is refered to FDA web site (http://www.fda.gov/).

CAUTION

- If you do not follow this period, you will have food poisoning sounds a bit extreme.

Purchasing and storing deep-frozen food

When purchasing frozen food, observe the following:

- Check that the packaging is not damaged.
- Check the sell-by date.
- The temperature of the supermarket freezer should be below -18 °C or lower. If not, the shelf life of the frozen food is reduced.
- Purchase deep-frozen food last. Wrap food in newspaper or place in a cool bag and take home.
- At home immediately place deep-frozen food in the freezer compartment. Consume the frozen food before the use-by date expires.

Thawing frozen food

Depending on the type and application, select one of the following options:

- At room temperature.
- In the refrigerator.
- In an electric oven, with/without fan assisted hot-air.
- In a microwave oven.

Do not refreeze food which is beginning to thaw or which has already thawed. The food cannot be refrozen until it has been prepared (boiled or fried).

Do not store the frozen products longer than the max storage period.

REMOVING THE INTERIOR PARTS

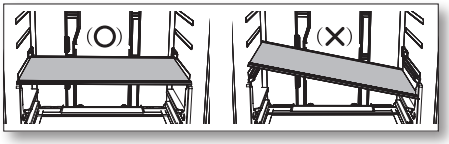

CAUTION When assembling, put fridge shelves in the correct position and do not put them upside down. It may cause a personal injury or material damage.

When you put the shelves back , make sure the side with the label “Rear” on it face the rear of the refrigerator

Shelves

Gently lift up the shelves with both hands and pull it toward you. (Glass shelf)

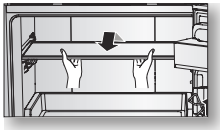

CAUTION Do not put the shelves upside down or backwards.
There is a risk of falling.

Door guards

Firmly grab the door guards with both hands and lift it up gently to remove the door guards.

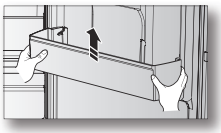

Water tank may not be available depending on the model.

Drawers

Pull the drawers out fully then slightly lift it up to remove the drawers.



- If the drawers get stuck to door, remove drawer by lifting up after remove shelves.

CLEANING THE REFRIGERATOR

WARNING Do not use Benzene, Thinner or Clorox™ for cleaning.
They may damage the surface of the appliance and can create a risk of fire.

CAUTION Do not spray the refrigerator with water while it is plugged in, as it may cause an electric shock. Do not clean the refrigerator with benzene, thinner or car detergent for risk of fire.

1. Unplug the power cord of the refrigerator.
2. Slightly dampen a soft lint-free cloth or paper towel with water.

Do not use any kind of detergent to clean the refrigerator because that can discolor or damage the refrigerator.

3. Wipe the inside and outside of refrigerator until it is clean and dry.
4. Plug the power cord of the refrigerator.

REPLACING THE LED LAMP

When the interior or exterior LED lamp has gone out, do not disassemble the lamp cover and LED lamp by yourself.

Please contact your service agents.

troubleshooting

PROBLEM	SOLUTION
The appliance is not operating at all or the temperature is too high.	• Check if the power plug is correctly connected. • Is the temperature control on the front panel correctly set? • Does sun shine on the appliance or are there any heat sources nearby? • Is the back of the appliance too close to the wall?
The food in the refrigerator is frozen.	• Is the temperature control on the front panel set to the coldest temperature? • Is the surrounding temperature too low?
There are unusual noises.	• Check if the appliance is installed on a stable and even floor. • Is the back of the appliance too close to the wall? • Have any foreign objects fallen behind or under the appliance? • Is the noise coming from the compressor in the appliance? • A ticking sound occurs when the various accessories contract or expand.
The front corners and sides of the appliance are warm and condensation starts to form.	• Heat-proof pipes are installed in the front corners of the appliance to prevent condensation from forming. When the surrounding temperature rises, this may not always be effective. However, this is not abnormal. • In very humid weather, condensation may form on the outer surface of the appliance when the moisture in the air comes into contact with the cool surface of the appliance.
You can hear a liquid bubbling in the appliance.	• This is the refrigerant, which cools the inside of the appliance.
There is a bad smell inside the appliance.	• Is there any spoiled food inside of the refrigerator? • Make sure that strong smelling food (for example, fish) is wrapped so that it is airtight. • Clean out your refrigerator periodically and throw away any spoiled or suspect food.
There is a layer of frost on the appliances walls.	• Are the air outlet vents blocked by food stored inside the refrigerator? • Space the food out as much as possible to improve ventilation. • Is the door fully closed?
Condensation forms on the inside wall of the appliance and around vegetables.	• Food with a high water content is stored uncovered with a high humidity level or the door has been left open for a long time. • Store the food with a cover or in sealed containers.

circuit diagram

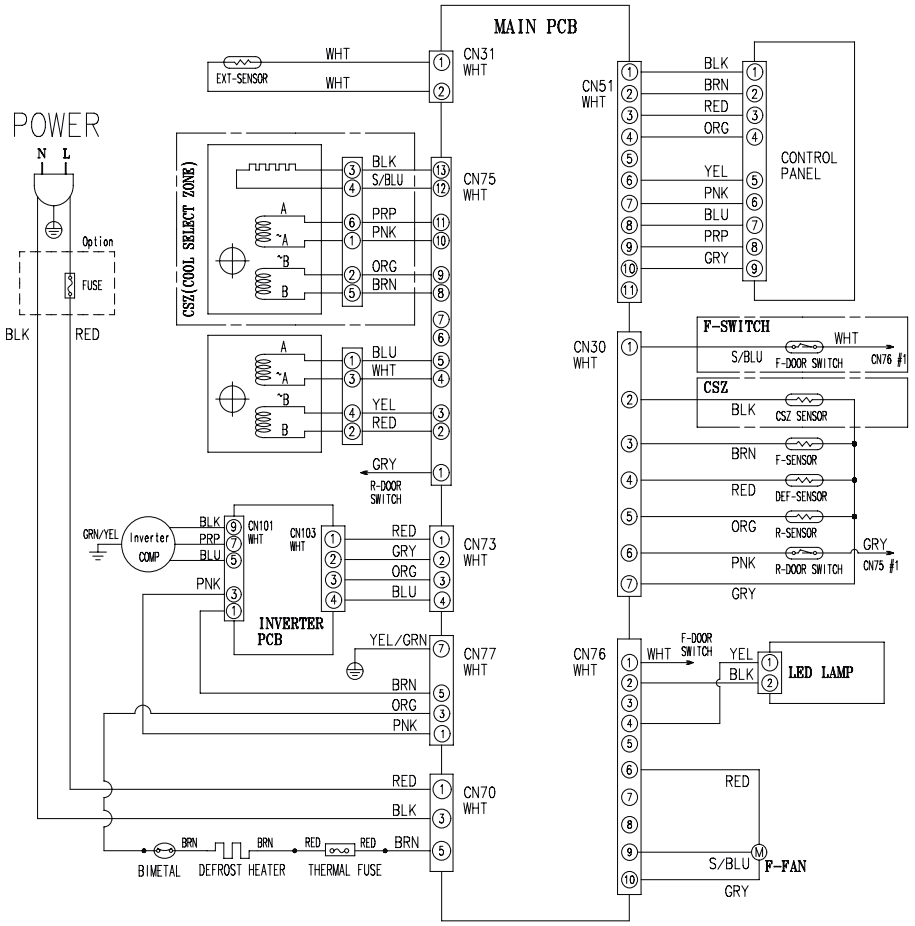

[OPTION TABLE]
9th Character at Model name

9th Character	CSZ	F-SWITCH	REMARK
C	O	O	A++ Model
D	X	X	A+ Model

memo

memo

Ambient Room Temperature Limits

This fridge/freezer is designed to operate in ambient temperatures specified by its temperature class marked on the rating plate.

Class	Symbol	Ambient Temperature range (°C)
		IEC 62552 (ISO 15502)
Extended Temperate	SN	+10 to +32
Temperate	N	+16 to +32
Subtropical	ST	+16 to +38
Tropical	T	+16 to +43

Internal temperatures may be affected by such factors as the location of the fridge/freezer, ambient temperature and the frequency with which you open the door.
Adjust the temperature as required to compensate for these factors.

Correct Disposal of This Product (Waste Electrical & Electronic Equipment)

English



(Applicable in countries with separate collection systems)

This marking on the product, accessories or literature indicates that the product and its electronic accessories (e.g. charger, headset, USB cable) should not be disposed of with other household waste at the end of their working life. To prevent possible harm to the environment or human health from uncontrolled waste disposal, please separate these items from other types of waste and recycle them responsibly to promote the sustainable reuse of material resources.

Household users should contact either the retailer where they purchased this product, or their local government office, for details of where and how they can take these items for environmentally safe recycling.

Business users should contact their supplier and check the terms and conditions of the purchase contract. This product and its electronic accessories should not be mixed with other commercial wastes for disposal.

SAMSUNG

Contact SAMSUNG WORLD WIDE

If you have any questions or comments relating to Samsung products, please contact the SAMSUNG customer care center.

COUNTRY	CALL	WEB SITE
AUSTRALIA	1300 362 603	www.samsung.com/au/support
COLOMBIA	Bogotá en el 600 12 72 Sin costo en todo el pais 01 8000 112 112 Y desde tu celular #726	www.samsung.com/co
EIRE	0818 717100	www.samsung.com/ie/support
HONG KONG	3698 4698	www.samsung.com/hk/support (Chinese) www.samsung.com/hk_en/support (English)
INDIA	1800 3000 8282 (Toll Free) 1800 266 8282 (Toll Free) 1800110011 (Toll Free) 30308282	www.samsung.com/in/support
BANGLADESH	0961-2300300 0800-0300300 (Toll free)	www.samsung.com/supportt
MALAYSIA	1800-88-9999 603-77137477 (Overseas contact)	www.samsung.com/my/support
NEW ZEALAND	0800 726 786	www.samsung.com/nz/support
PANAMA	800-0101	www.samsung.com/latin/support (Spanish) www.samsung.com/latin_en/support (English)
PHILIPPINES	1-800-10-726-7864 [PLDT Toll Free] 1-800-8-726-7864 [Globe Landline and Mobile] 02- 422-2111 [Standard Landline]	www.samsung.com/ph/support
SINGAPORE	1800-SAMSUNG(726-7864)	www.samsung.com/sg/support
SOUTH AFRICA	0860 SAMSUNG (726 7864)	www.samsung.com/support
UK	0330 SAMSUNG (7267864)	www.samsung.com/uk/support
VIETNAM	1800 588 889	www.samsung.com/vn/support